Art. no. 96.06.5.0805/11.06

HENKOVAC
vacuum packaging machines

http://www.henkovac.nl, e-mail: info@henkovac.nl.

User manual

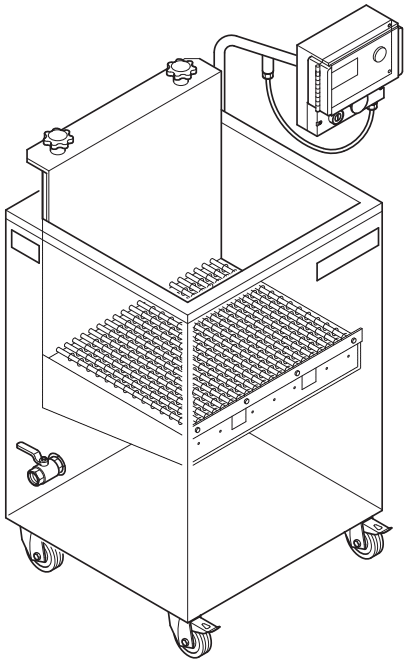

Diptank
"HV-40/60"
"HV-55/75"

Manufactured by:

HFE vacuum systems

Het Sterrenbeeld 36, 5215 ML 's-Hertogenbosch, The Netherlands

P.O.Box 2261, 5202 CG 's-Hertogenbosch, The Netherlands

tel: +31(0)73-6271271, fax: +31(0)73-6271200

http://www.hfe.nl, e-mail: info@hfe.nl

©2011 HFE Vacuum Systems BV

All rights reserved.

No part of this document may be reproduced and/or published by means of printing, photocopy, microfilm or any other method, without the prior written permission of the manufacturer. This also applies for the accompanying illustrations and/or diagrams and schematics.

The information in this document is based on the general data associated with the construction, material qualities and working methods, known at the moment of publication, so that we reserve the right to make changes without giving prior notice.

This document is applicable to the indicated models of the Henkovac packing machine in the version supplied. The manufacturer therefore does accept any liability for any form of damage or injury resulting from deviating from the specifications of these machines as supplied to you.

All possible care was taken when creating this document, but the manufacturer accepts no liability for mistakes or any consequences thereof.

TAKE THE TIME TO READ THIS DOCUMENT THOROUGHLY TO ACQUAINT YOURSELF WITH THE CORRECT AND APPROPRIATE USE OF THE HENKOVAC PACKING MACHINES.

2011-06

PREFACE

USE OF THE MANUAL

This manual is intended as a reference for users and technicians, who can install, use and maintain the machine(s) stated on the front of this document in a safe way.

PICTOGRAMS AND SYMBOLS AT THE MACHINE

At the machine the following pictograms and symbols are attached to the machine:



Suggestions and advice to make carry out the particular tasks or actions easier.



WARNING

Procedures that can result in damage to the machine, the surroundings and the environment or physical injury when not carried out carefully.



DANGER

Danger of electrical shock!



DANGER

Residual substances can contain valuable substances and materials that can be suitable for recycling. Waste may also contain substances that are harmful to the environment.

ILLUSTRATIONS

Because of the number of types and models it is impossible for practical reasons to illustrate every variation. Nevertheless, the illustrations used show the principles of operation of the machine identified on the front of this document.

SERVICE AND TECHNICAL SUPPORT

For information concerning specific settings, maintenance or repair work that is outside the scope of this manual, contact the supplier of the machine. He is always ready to help you. Make sure that you have the following data available:

machine type

serial number

This data can be found on the identification plate.

IDENTIFICATION OF THE MACHINE

The identification plate contains the following data:

A	Type		
B	Serial number		
C	Year of manufacture		
D	Number of phases-Voltage	Volt	V
E	Frequency	Hertz	Hz
F	Current	Ampere	A
G	Weight	kilogram	kg

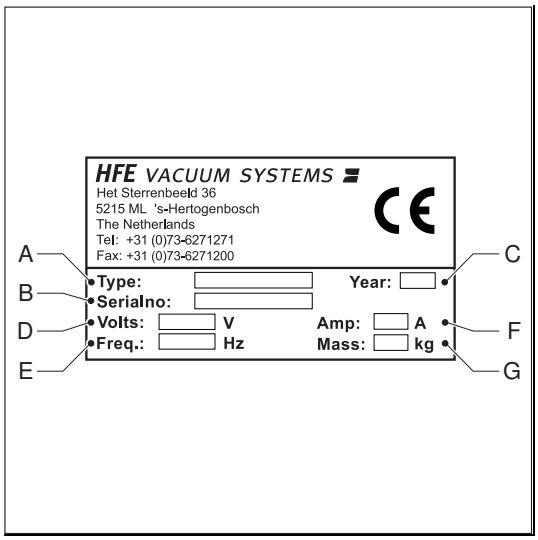

CONTENTS

PREFACE **3**

SAFETY INSTRUCTIONS AND DANGER WARNINGS **6**

SAFETY REGULATIONS IN THE DIPTANK **8**

MACHINE AND THE ENVIRONMENT **9**

1.THE DIPTANK **10**
1.1. EXECUTION DIPTANK 10
1.2. MAIN COMPONENTS DIPTANK 10

2.INSTALLATION **11**
2.1. INSTALLATION 11
2.2. PREPARE FOR USE 11

3.CONTROL **12**
3.1. CONTROL PANEL 12
3.2. SWITCHING ON 12
3.3. THERMOSTAT 12
3.3.1. Adjust working temperature 12
3.3.2. Control working temperature 13
3.3.3. Control working thermostat 13
3.4. USE 13

4.MAINTENANCE **14**
4.1. CLEANING OF THE TANK 14
4.2. CONNECTION CABLE 14

5.FAULTS **15**

6.TECHNICAL DETAILS **16**

7.CE-DECLARATION ..... Fout! Bladwijzer niet gedefinieerd.

SAFETY INSTRUCTIONS AND DANGER WARNINGS

GENERAL

The manufacturer accepts no liability whatsoever for damage or injury caused by not (strictly) following the safety directions and instructions in this manual, or carelessness during the installation, use, maintenance and repair of the machines identified on the front of this document and any accompanying options.

The owner of the machine is responsible at all times for observing the locally applicable safety regulations and guidelines.
Obey all safety instructions and guidelines as given in this manual.

USER MANUAL

Every user should be informed of the contents of this manual and follow the instructions in it carefully. Management must train personnel on the basis of this manual and obey all directions and indications.
They should not be damaged or removed and they should remain present and readable throughout the entire life span of the machine.

Replace or repair unreadable or damaged pictograms, warnings and instructions immediately.

Always keep the manual in the proximity of the machine.

PICTOGRAMS AND INSTRUCTIONS ON THE MACHINE

The pictograms, warnings and instructions that have been attached to the machine are part of the safety measures taken.
They should not be damaged or removed and they should remain present and readable throughout the entire life span of the machine.
Replace or repair unreadable or damaged pictograms, warnings and instructions immediately.

PICTOGRAMS ON THE DIPTANK

On the machine the following pictograms are attached.



DANGER

Before opening: remove the plug from the wall socket!
Only qualified personnel are allowed to open the unit.

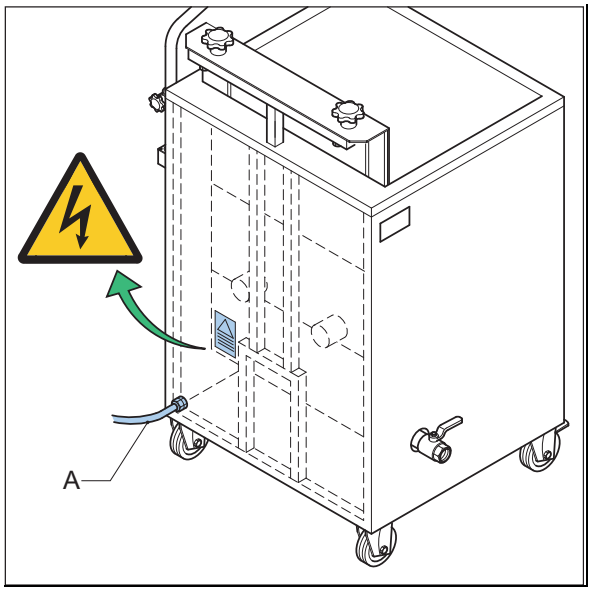

CONNECTIONS TO THE DIPTANK

The diptank is equipped with a power cable. A plug suitable for the local power requirements has to be connected to the power cable.



DANGER

The plug can only be connected by qualified electricians only.

USE OF THE MACHINE*1

The diptank has been designed to shrink shrink bags, in which products have been packed under vacuum, under influence of head.
Any other or extended use is not according to the purpose. The manufacturer accepts no liability for damage or injury resulting from this. Use the machine only in a technically perfect condition, in accordance with the purpose described above.

TECHNICAL SPECIFICATIONS

The specifications stated in this manual may not be changed.

MODIFICATIONS

Modifications of (parts of) the diptank are not allowed.

By modifications executed by others than HFE vacuum systems b.v.:

- The guarantee expires
- The liability of the manufacturer expires

***1** The “Use in accordance with purpose” as established in EN 292-1 is the use for which the technical product is suitable according to the statement by the manufacturer – including his directions in the sales brochure -. When in doubt it is the use that appears to be the most usual from the construction, model and function of the product. Use in accordance with the purpose means observing the instructions in the user manual.

SAFETY REGULATIONS IN THE DIPTANK

BOILING DYR SECURITY

The machine is equipped with a float switch (A) that secures the diptank against boiling dry. Because of the vaporizing of warm water and as there is always some water left in the packing, the water level in the diptank will decrease. When the water level will be too low, the heating will switch off automatically.

Switching on again of the diptank:

- Add water.
- Press the pushbutton to switch on the diptank.

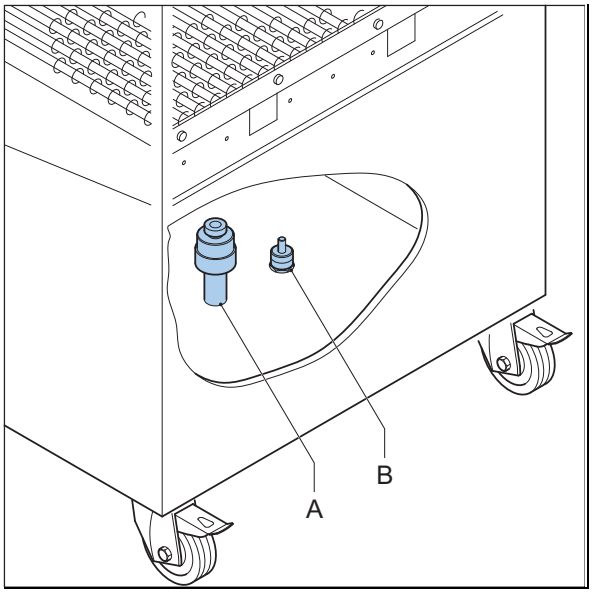

TEMPERATURE SENSOR

The temperature sensor (B) in the diptank guards the temperature set.

USE

- Inspect the diptank before use and check it for damage.
- Remove the plug from the diptank from the wall socket after every use. Because of this you will not have tension on the diptank.
- Never use sharp objects to operate the keys.
- Do not allow unauthorized persons into the working environment.
- Always ensure there is adequate ventilation, especially in confined places
- Wear clothing that is suitable for the work. Loose clothing or jewelry can get between the cover and the vacuum chamber.
- Never use the machine in an environment in which there is an explosion risk.
- Replace the supply cable if it is damaged
- Make sure that the supply cable cannot be damaged by trapping this cable.

HYGIENE

- Cleaning the machine is of the utmost importance when food products are wrapped. Clean the machine regularly and thoroughly, preferably every day, sees “maintenance”.
- Work hygienically and prevent direct contact between the product and the machine as much as possible.
- Keep the operating controls free of dirt and grease.
- Hold long hair together.

SERVICE, MAINTENANCE AND REPAIR

A clear distinction is made in this manual between the service, maintenance and repair work that can be carried out by the user, and that which is reserved for trained and qualified service technicians only.

- Make sure there is adequate lighting.
- Always switch off the machine at the main switch during maintenance and/or repairs and/or remove the plug from the socket.
- Observe the maintenance intervals specified. Overdue maintenance can lead to high costs for repair and servicing and the right to guarantee can be lost.
- Always use parts, materials, lubricants and service techniques approved by the manufacturer.
- Never use worn tools and do not leave any tools inside the machine.
- Do not carry out service, maintenance or repair work to the machine, when it is indicated that the dealer or qualified service technician should carry it out.
- Always have a recognized Henkovac dealer carry out repair and maintenance work.
- Safety measures that have been removed in order to carry out service, maintenance or repairs must be refitted immediately after this work and they must be checked for correct operation.

MACHINE AND THE ENVIRONMENT



PACKING

The packing that is for the transportation and protection of the machine is mainly made of cardboard and/or wood, which are suitable for recycling. Do not dispose of the packaging as industrial waste but ask the sanitation department of your local government authority where you can hand in the material.



MACHINE

When you dispose of your machine, it can still contain valuable substances and materials. Do not dispose of the machine as industrial waste, but enquire at your local government authority about the possibilities for recycling or environmentally friendly disposal of the material.

- Most parts of the machine have been manufactured from stainless steel and can be disposed of as scrap metal in the normal way. From health and environmental considerations, no asbestos has been used.
- The printed circuit boards and the components mounted on them are electronic waste.. Deliver old printed circuit boards to specialized companies for environmentally friendly processing.



OIL

Ask the sanitation department of your local government authority where you should take the used oil for an environmentally friendly processing.

1. THE DIPTANK

1.1. Execution diptank

In a diptank products can be final processed which are vacuum packed in shrink bags. Shrink bang are vacuum bags which shrink when being heated.

A diptank is a machine with a water reservoir. The water will be heated till the adjusted temperature. After vacuum packing of products the package shows folds and wrinkles. When a packed product in a shrink bag is dipped in hot water, the pouch shrinks and straightens out the folds. The result is a tight packed product with a second skin effect.

In the diptank there is a platform, where products should be placed on when it is in its highest position. After placing the products on the platform, the push button has to be pressed. The platform will automatically descend and rise automatically where the products have been dipped in the warm water. The final processed products have to be removed manually from the platform.

1.2. Main components diptank

A. Control panel
B. Platform
C. Wheel with brake
D. Wheel
E. Drainer
F. Connection cable
G. Identification plate

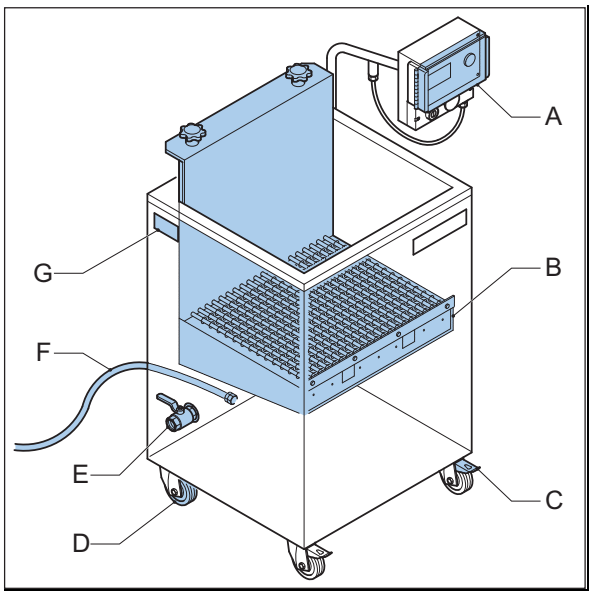

2. INSTALLATION

2.1. Installation

1. Unpack the diptank.
2. Level the machine on a flat firm surface.
3. Apply the brakes of the wheels
4. Have a qualified electrician connect a suitable plug to the connection cable.
5. Adjust the height of control panel:
   Loosen the star button (A) and position the control panel (B) at a suitable height and angle, in order to work easier with the diptank.

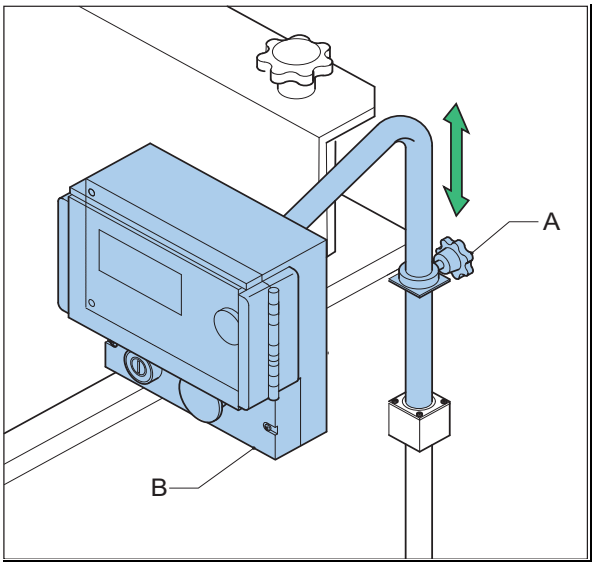

ATTENTION

Never place the diptank before an entrance, exit or emergency exits that are meant for emergency services.

2.2. Prepare for use

1. Make sure that the draw-off tap (C) is closed.
2. Fill the tank with water, until about 4 to 6 cm. under the platform (B), if the platform is positioned in the upper level.
3. Connect the diptank to a socket.

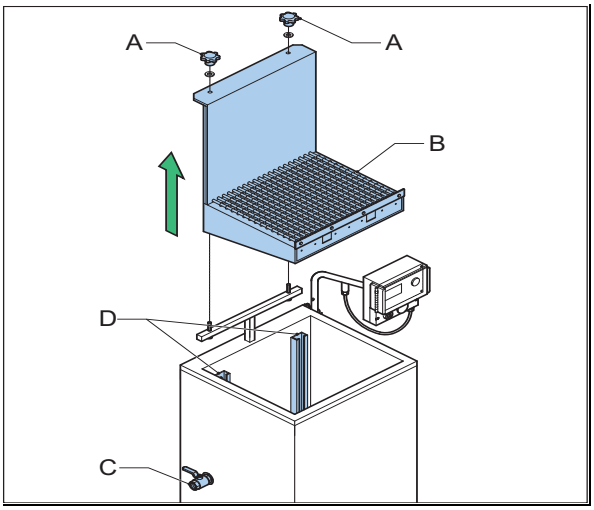

ATTENTION

Pay attention to the dimensions of the vacuum packed products. If the packed product will go completely under water, no water may flow over of the tank.

3. CONTROL

3.1. Control panel

A. Temperature control
B. Control lamp
C. Pulse button in order to have the diptank make one cycle.
D. Start button for the heating

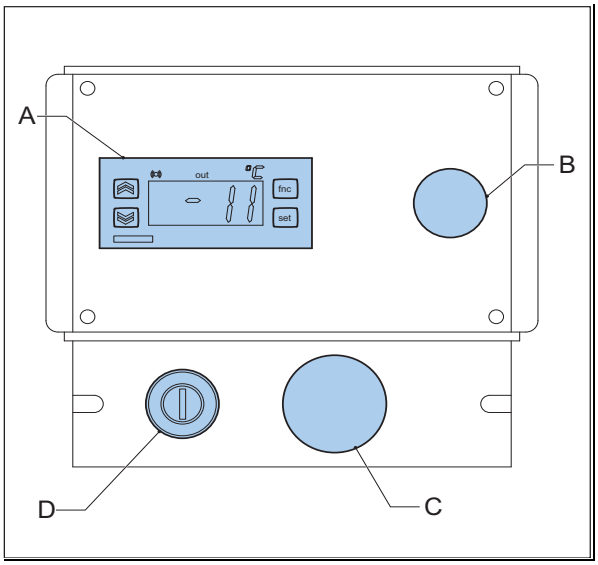

3.2. Switching on

1. Press the start button (D): the heating will be switched on. The control lamp (B) will burn.

The heating of the water takes 45-60 minutes.

2. Press the pulse button (C): the platform makes one cycle and stops in the upper position. Check the water level, see § 2.2.
3. Open the transparent cover.
4. Adjust the required water temperature.

3.3. Thermostat

A. Display
B. Function button “fnc”
C. Function “set”
D. Function “down”
E. Function “up”

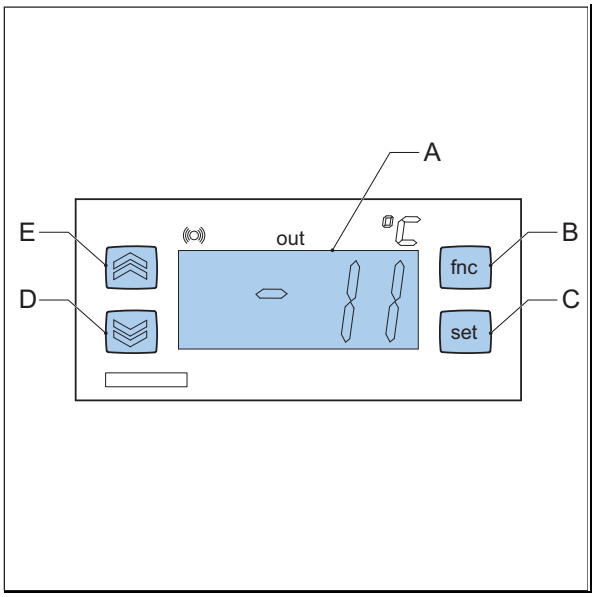

3.3.1. Adjust working temperature

1. Press the button “set” (C) for 1 second. The display (A) will show “SET”.
2. Press “set” again. The display shows the adjusted value.
3. Adjust the temperature to 90°C by pressing the button “op” (E) or button “down” (D).
4. Press twice on “fnc” (B) to store the adjusted value. This ends the adjustments.

Remarks

- The display shows the measured temperature. This is the actual temperature, not the adjusted temperature.
- If you have not pushed a button during 15 seconds, the display automatically returns, without storing the value.

3.3.2. Control working temperature

1. Press two times on “set”. In the display the adjusted temperature will be shown.

3.3.3. Control working thermostat

1. Adjust the working temperature at about 3°C above the surroundings temperature.
   In the display a point will lighten, that shows that the relays of the controller will be changed over.
2. Adjust the working temperature at about 3°C below the surroundings temperature.
   If the point extinguishes, the working of the thermostat is okay.
3. Adjust the correct working temperature again, see § 3.3.1.

3.4. Use

If the water is on temperature is, the diptank can be used.

1. Place the to be final processed vacuum packed product (A) on the platform (B).
2. Push the pulse button (C). The platform makes one cycle: one down and one up. In this upper position the platform will stop.
3. Remove the final processed product from the platform.

A new to be final processed vacuum packed product can be placed on the platform.

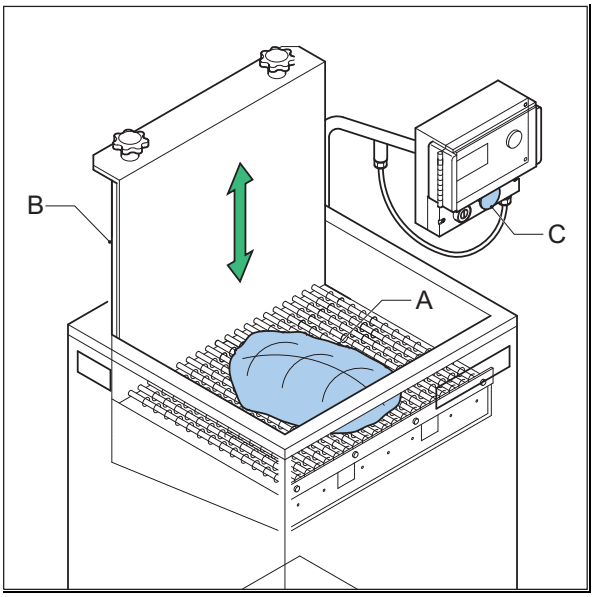



DANGER

During the cycle the platform moves down and up. Keep away from moving parts in order to prevent oppressing.

4. MAINTENANCE

4.1. Cleaning of the tank

Daily maintenance in order to work hygienically it is necessary to:

- Clean the tank
- Refresh the water

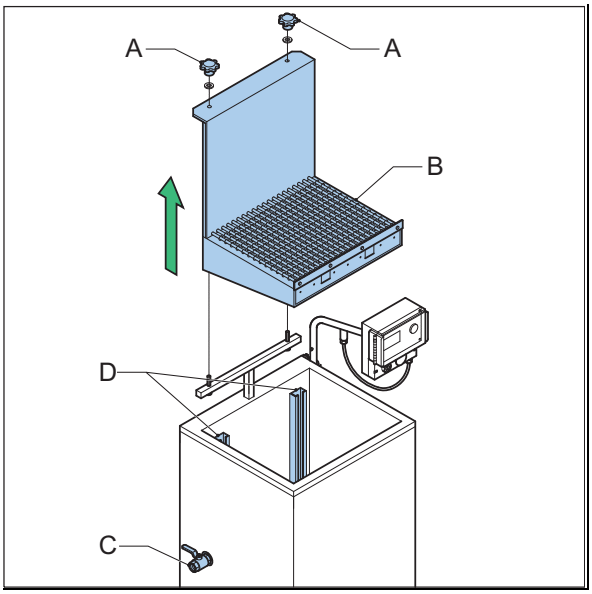

1. Remove the plug from the socket. Because of this the diptank, so including the heating, will be switched off.
2. Loosen the star buttons (A).
3. Take the platform (B) out of tank.
4. Clean the platform.
5. Draw off the water in the tank, by opening the draw-off tap (C). Make sure of a good discharge of the water.
6. Close the draw-off tap.
7. Attach the platform: the guide rollers have to slide in the rails (D).
8. Tighten the platform with the star buttons.
9. Fill the diptank with clean water before starting the new production, see § 2.2.

4.2. Connection cable

1. Check the connection cable regularly for damages.

DANGER

Have the dealer replace a damaged connection cable immediately.

5. FAULTS

Faults	Cause	Remedy
The diptank does not work.	The plug is not in the socket.	Plug the plug into the socket.
	(Earth leaking) protection in the electric cabinet has tripped.	Check the electric cabinet.
	A fuse(s) in the electric cabinet is defective.	Check the electric cabinet.
	A fuse(s) in the machine is defective.	Consult your dealer.
	The motor protection of the machine is switched off.	Consult your dealer.
	There is a break in the connection cable.	Have the connection cable been replaced by authorized electrician.

6. TECHNICAL DETAILS

Type	HV-40/60	HV-55/75

Dimensions and weight		
Depth	675 mm	800 mm
Width	860 mm	1020 mm
Height	1350 mm	1350 mm
Weight	106 kG	130 kG
Dimensions and weight of the packed machine		
Depth	960 mm	1035 mm
Width	950 mm	1180 mm
Height	1260 mm	1375 mm
Weight	157 kG	190 kG

General information			
Platform	Length	580 mm	730
	Width	410 mm	530
Contents diptank		110 ltr	180 ltr
Maximum water volume		75 – 80 ltr	100 – 140 ltr
Connection draw-off tap		1" female	

Electrical connections		
Voltage, Current, Frequency	See the identification plate, see “identification of the machine”.	
Capacity	9 kW	15 KW
Phases 200V – 240V	3 phases	
Phases 380V – 415V	3 phases + neutral	
Frequency	50/60 Hz	
Voltage tolerance	± 10 %	

Voltage date was not included in this summary, because these are dependent on the electricity supply of the country that the machine is intended for. The voltage dates are given on the machine identification plate (see “identification of the machine”),
Dimensions and weights are for the standard model machines.

7. CE-DECLARATION

CE-VERKLARING VAN OVEREENSTEMMING
CE-DECLARATION OF CONFORMITY
CE-KONFORMITÄTSERKLÄRUNG
DECLARATION DE CONFORMITÉ CE
DICHIARAZIONE DI CONFORMITA'CE

Wij,
We, HFE vacuum systems bv.
Wir, Het Sterrenbeeld 36, 's-Hertogenbosch
Nous, The Netherlands
Noi,

verklaren geheel onder eigen verantwoordelijkheid dat de produkten,
declare under our sole responsibility that the products,
erklären in alleiniger Verantwortung, daß die Produkte,
déclarons sous notre responsabilité, que les produits,
Dichiariamo sotto la nostra responsabilità che las macchinas

Henkovac vacuum packing machines

waarop deze verklaring betrekking heeft, in overeenstemming is met de volgende Europese Richtlijnen:
to which this declaration relates, complies with the requirements of the following European Directives:
auf die sich diese Erklärung bezieht, folgende Europäischer Richtlinie entspricht:
auquel se réfère cette déclaration, est conforme aux Directives Européennes:
alla quale si riferisce questa dichiarazione, è conforme alle Direttive Europee:

- **the machine guideline: 2006/42/EG**
- **the EMC-guideline: 2004/108/EG**

Conformiteit is aangetoond door overeenstemming met de volgende normen:
Conformity is testified by complete adherence to the following standards:
Die Übereinstimmung wird nachgewiesen durch die vollständige Einhaltung folgender Normen:
La conformité est demonstrée par la conformité intégrale avec les normes suivantes:
La conformità è dimostrata dalla conformità alle sequenti norme:

NEN-EN-ISO 12100-1
NEN-EN-ISO 12100-2
NEN-EN-ISO 14121-1
NEN-EN-ISO 13857
NEN-EN 60204-1



E.H. Goudsmid
Managing Director

The Netherlands, 's-Hertogenbosch, June 2011