Miele
PROFESSIONAL

Operating instructions

Washer-Extractor



PW 6241
PW 6321

To avoid the risk of accidents or damage to the machine it is **essential** to read these instructions before installing, commissioning and using it for the first time.

GB

M.-Nr. 06 572 490

Contents

Warning and Safety instructions 4
Caring for the environment 7
Description of the machine 8
Control elements 9
How to wash correctly 11
Sort the laundry 11
Maximum loads for the standard programmes 12
Add cleaning agent 12
Detergent dispensing 13
Select a programme 14
Open the door at the end of the programme 16
Card operation 18
Card access operation 18
Additional options 19
Language selection 19
Start date and time 19
Programme stop 21
Programme cancellation 21
Changing the programme order 22
Standard programme overview 23
Optional modules 25
Liquid dispensers 25
Peak load cut-out 27
PC connection 27
Operating data 27
Load sensor 29
Problem solving guide 30
The door will not open 30
Power cut during a wash programme
Emergency door release 30
Error messages 32
After sales service 34
Cleaning and care 35
Explanation of symbols on the data plate 38
Notes for the installer 39
Transit fittings 39
Plumbing 40
Water inlet / drainage 40
Electrical connection 41
Abbreviated operating instructions PW 6241, PW 6321 43

This machine must be installed by an authorised technician only. In the U.K. gas heated machines must be installed by a Corgi registered fitter only.

To avoid the risk of accidents and damage to the machine read the operating instructions carefully before using it for the first time. They contain important information about the installation, safety, use and maintenance of the machine. Keep these operating instructions in a safe place and ensure that new users are familiar with the content. Pass them on to any future owner of the machine.

Correct usage

This machine is not designed for washing items which have been treated with dangerous or flammable substances.

Only use the machine to wash items which are specified by the manufacturer to be machine-washable on the wash-care label.
Any other applications may be dangerous. The manufacturer is not liable for damage resulting from improper use or operation.

Dry cleaning agents must not be used in this machine. Most dry cleaning agents, e.g. benzine, pose a **fire and explosion hazard.**

Petrol, paraffin, or any easily flammable liquid must not be stored or used near the machine. Do not use the machine lid as a storage shelf.
Fire and explosion hazard.

Do not store any chemicals on the machine lid (liquid detergent, fabric conditioners etc). They could discolour the lid and also damage the surface finish. If any chemicals should come in contact with the surface, wipe them away immediately with clean water. Then dry with a soft cloth.

Technical and electrical safety

The electrical safety of this machine can only be guaranteed if connected to a correctly installed earthing system on site. It is most important that this basic safety requirement is present and tested regularly, and where there is any doubt, the on-site electrical wiring should be inspected by a qualified electrician. The manufacturer cannot be held liable for the consequences of an inadequate earthing system (e.g. electric shock).

Do not damage, remove or bypass the safety features, fixtures and control elements of this machine.

Do not use a machine with damaged controls or cables. These must be repaired before it is used again.

Any removable outer panels must be back in place, and all moving or electrical parts shielded before the machine is switched on.

The machine is only completely isolated from the electricity supply either when it is switched off at the isolator switch or the mains fuse has been withdrawn.

Repairs to electrical, gas or steam operated machines may only be carried out by a suitably qualified person in accordance with national and local safety regulations. Repairs to gas heated machines in the U.K. must only be carried out by a "Corgi" registered technician.

Do not force the drum door open. The door handle is fitted with a safety device to ensure that the door lock functions correctly.

Faulty components must only be replaced by genuine Miele original spare parts. Only when these parts are fitted can the safety standards of the machine be guaranteed.

The best materials are used in the manufacture of this machine, and every care is taken to check all parts. However, with time, deterioration of parts can occur, especially with such components as hoses, giving rise to leaks. Check the inlet hoses regularly for signs of wear and tear. Change in good time to avoid the risk of leaks and subsequent damage.

Gas-heated washer-extractors

Safety precautions to take if you smell gas

– Turn off the gas emergency control valve immediately. (Usually located near the gas meter).

– Eliminate all sources of ignition in a safe manner. Do not smoke, light cigarette lighters or matches.

– Do not operate electrical lights or switches, either "On" or "Off".

– Open all doors and windows to ventilate the area.

– If the smell of gas persists, evacuate the building.

You must now:

– In the U.K. call TRANSCO (0 800 111 999)

– Arrange for an appointment of a **Corgi** registered gas installer to visit the site (Talking pages 0 800 600 900)

In other countries please follow relevant country specific procedures.

Warning: After installation, maintenance, conversion, repairs and before using for the first time it is essential that a test for possible leakages is carried out. All components which carry gas must be checked, including the gas valve and burner jets.
In the U.K. this must be carried out by a Corgi registered technician.
Particular attention must be paid to the test nipple on the gas valve.
Testing must be carried out with the burner switched on and switched off.

Using the washer-extractor

This machine is not a toy! To avoid the risk of injury never allow children to play on or near the machine, or to operate it themselves.

Remember that the porthole glass will be hot when washing at very high temperatures. Do not let children touch it.

Always make sure that the drum is stationary before reaching into the machine to remove laundry. Reaching into a moving drum is extremely dangerous.

The water used for washing is a suds solution and **is not drinking water.** The suds solution must be drained away via an appropriate drainage system.

The washer-extractor may only be operated without supervision if there is a floor drain (gully) in the immediate vacinity.

Using chlorine or cleaning agents which contain chlorine will lead to corrosion and in certain circumstances can cause irreparable damage to components.

It is the operator's responsiblity to ensure that the standard of disinfection in thermal as well as chemo thermal procedures is maintained (in accordance with § 18 IFSG) by carrying out suitable validation tests. These procedures should be checked on a regular basis, either thermo-electrically using loggers, or bacteriologically with bio indicators. The operator must pay particular attention to maintaining the correct parameters in the procedure, including temperature and with chemo thermal programmes, the chemical concentration used. Disinfection programmes must not be interrupted, as this can have a limiting effect on the disinfection result.

Always follow the manufacturer's instructions given on the packaging, particularly when using a combination of cleaning agents and special application products. Only use the product for the application described by the manufacturer, to avoid any material damage or the occurrence of strong chemical reactions. Confirm with the detergent manufacturer that their product can be used in combination with another type of product.

Only use dyes, colour run and dye removers specified as being suitable for use in washing machines. Always observe the manufacturer's instructions carefully.

Do not use a high pressure cleaner or hose to clean the machine.

Further notes

Cleaning and disinfecting agents often contain chlorine based substances. Do not let such agents come into contact with the stainless steel surfaces, as the chlorine can have a corrosive effect. Use chlorine-free agents for washing and disinfecting and also for cleaning stainless steel surfaces to protect them from corrosion.
If in doubt, confirm with the manufacturer that their product is suitable. If any agent containing chlorine comes into contact with the stainless steel surfaces, wipe it away immediately with clean water. Then dry with a soft cloth.

The manufacturer cannot be held liable for the effect of a chemical cleaning agent on laundry or the machine, even when the use of such agents is recommended. Please note that changes to the product which have not been made known by the manufacturer can affect the quality of the wash result.

Using accessories

Accessory parts may only be fitted when expressly approved by Miele. If other parts are used, guarantee, performance and product liability claims may be invalidated.

Any additional components used, e.g. suction devices for liquid agents, electronic water meters or dispenser monitors, must conform to Safety Class II. If connected to an external PC, this must conform to EN 60950-1:2001 (IEC 60950-1:2001).

Disposal of your old machine

Before disposing of an old machine, first make the door lock unusable. This way you will prevent children from accidentally locking themselves in and endangering their lives.

All personnel working with this machine must be fully trained in all aspects of its use and safety.

Keep these instructions in a safe and accessible place.

Disposal of the packing material

The transport and protective packing has been selected from materials which are environmentally friendly for disposal and can normally be recycled. Packaging e.g. cling film, polystyrene and plastic wrappings must be kept out of the reach of babies and young children. Danger of suffocation.

Rather than just throwing these materials away, please ensure that they are recycled.

Disposal of your old machine

Electrical and electronic machines often contain materials which, if handled or disposed of incorrectly, could be potentially hazardous to human health and to the environment. They are, however, essential for the correct functioning of your machine. Please do not therefore dispose of it with your household waste.

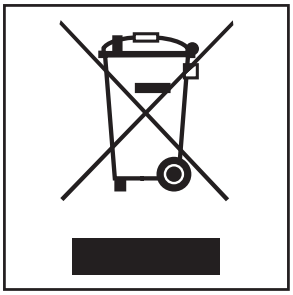

Please dispose of it at your local community waste collection/recycling centre, and ensure that it presents no danger to children while being stored for disposal.

It should be unplugged or disconnected from the mains electricity supply by a competent person. The plug must be rendered useless, and the cable cut off directly behind it to prevent misuse. See the "Warning and Safety" section of this booklet for further details.

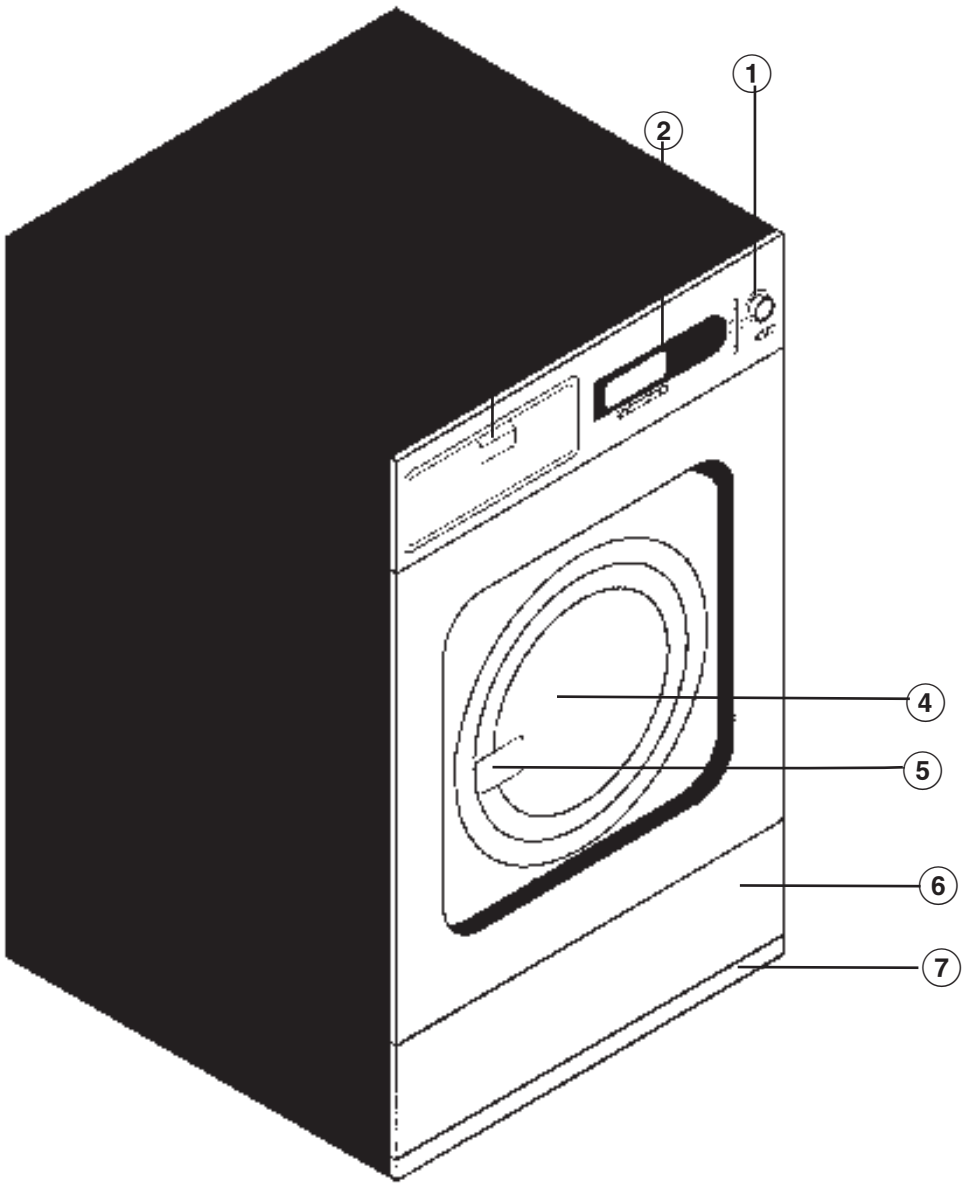

① **Emergency stop switch**

Press the red button to switch the machine off.

② **Control panel**

③ **Detergent dispenser drawer**

Pull the handle to open the compartment.

④ **Drum door**

Pull the door handle to open the drum door. **Do not use force** to open it.

⑤ **Door handle**

The door handle is fitted with a safety device to ensure that the door lock functions correctly (see page 30).

⑥ **Service panel**

⑦ **Plinth**

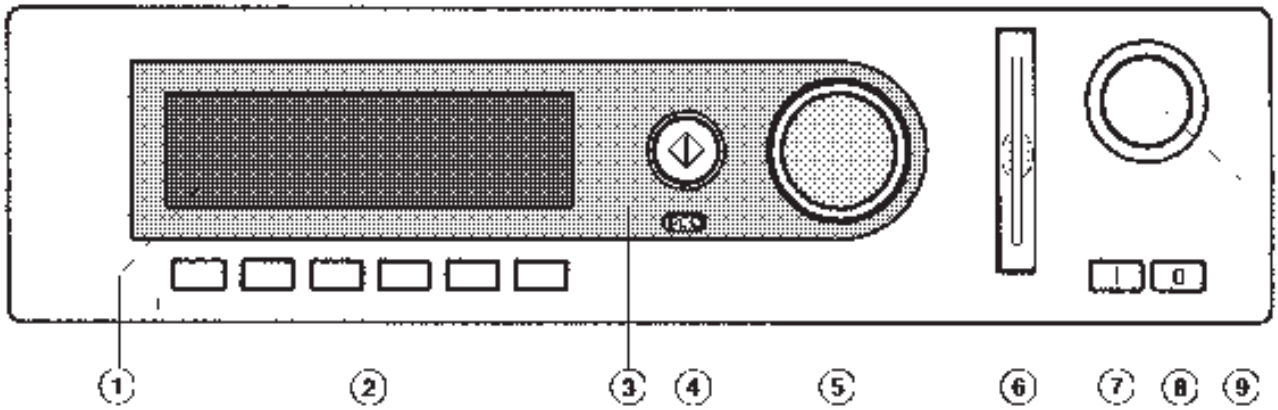

Control elements

① Display

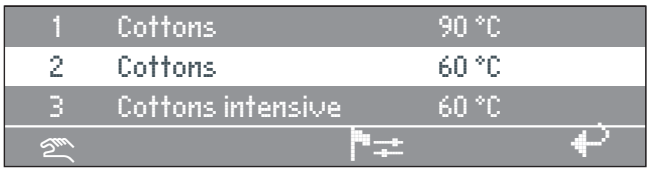

After switching on the "Welcome" display will appear for a short time followed by the programme list. The most recently used programme is highlighted.

② Function buttons

The six buttons underneath the display are the function buttons. These buttons have specific functions depending on the status of the machine.
These functions will be listed in the display above the buttons and will be highlighted once selected.

③ ◇ Start button

The lightring will flash when a selected programme can be started. Pressing the Start button will start the programme. After a programme has started, pressing this button will show the display as it was before the start of the programme.

④ PC / Optical interface

This interface is used for transferring data to the control unit from a PC and vice versa.

⑤ Rotary selector

Turning the selector brings up options and menus in the display.
Pressing the selector confirms your selection.

⑥ Chip card reader

When a chip card is inserted, the programmes on the chip card can be used. Insert the card in the direction of the arrow (on the card).

⑦ I Mains on switch

Switches the machine on.

⑧ 0 Mains off switch

Switches the machine off.

⑨ Emergency stop switch

Only for use in an emergency.
Press the red button to switch the machine off. After the problem has been resolved, turn the red dial clockwise to release it. Then press the Start ◇ button to continue the interrupted programme.

Function buttons

Pressing the button activates the function and pressing the button again deactivates it.

Stop/End
The function button on the right-hand side is used to stop a programme after it has started.
Pressing it again finishes the programme.

+ Block plus
The relevant programme block (e.g. Pre-wash) is added to the programme.

Starch stop
Press this button if you wish to laundry to be starched.

Without spin
Press this button if you do not want the laundry to be spun after being rinsed.

Settings
Press this button to switch to another language temporarily.

Start time
Press this button before the start of a programme to display the message that a start time can be selected.

i Information
Press this button to call up programme information in the display.

Water drainage

Manual control
See the programming instruction booklet.
Change order

The order of the programme in progress can be changed or programme blocks can be repeated.

Back
Takes you back to the previous display.

▼/▲ Indicates more information on the next / previous line

Save
See the programming instruction booklet.

Programme locked
Once a locked programme has been started, the End button can only be used to stop and cancel it during the first minute.

Programme unlocked

Dispensing

Dispensing switched off

Operating data

>I< 0- Setting (calibration)
If the display does not show 00.0 when the drum is empty press this button to reset it.

Data transfer

Chip card operation

The chip card is supplied without any programmes.
See the programming instruction booklet for information on transferring data from the control unit to the chip card and vice versa.

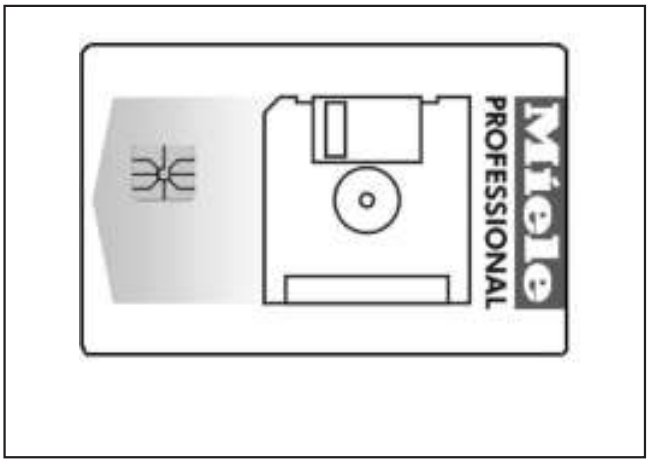

The chip card can store a maximum of 30 programmes, each with 6 blocks. The back of the chip card can be labelled.

The machine must be commissioned by a Miele service technician or a dealer authorised by the manufacturer before it is used for the first time. For gas heated machines in the U.K. this must be carried out by a Corgi registered technician.

- Open the on-site stopcocks for water and depending on the type of heating, gas or steam.
- Switch on the on-site mains switch.
- Press the "On" **I** switch to switch the machine on.



A "Welcome" message will appear in the display.

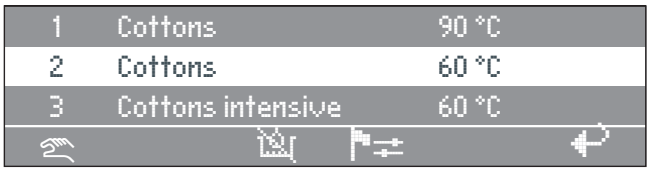

This is followed by the programme list (with the most recently used programme highlighted).

Turn the selector dial to highlight the programme you want. The programme can be then started by simply pressing the Start ◇ button.

Sort the laundry

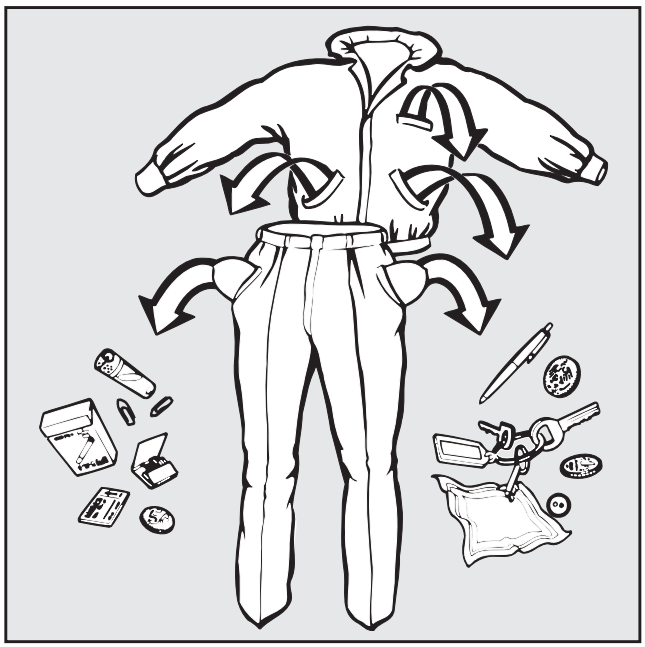

- Empty any pockets.

Foreign objects (e.g. nails, coins, paper clips, etc.) can cause damage to garments and components in the machine.

Maximum loads for the standard programmes

(Dry weight of laundry)

PW 6241	PW 6321
1 Cottons 90°C **2** Cottons 60°C **3** Cottons intensive 60°C **4** Cottons 30°C **5** Cottons intensive 30°C	
max. 24 kg	max. 32 kg
6 Minimum iron 60°C **7** Minimum iron intensive 60°C **8** Minimum iron 30°C **9** Minimum iron intensive 30°C	
max. 12 kg	max. 16 kg
10 Delicates	
max. 5 kg	max. 7 kg
11 Woollens 30°C **12** Handwashable woollens 30°C	
max. 9.6 kg	max. 12.8 kg

The maximum load for other programmes is given in the relevant programme overview.

- Load the laundry
- Close the drum door with the door handle. Do not slam it shut.

Make sure that no garments are caught between the drum door and the drum opening.

Add cleaning agent

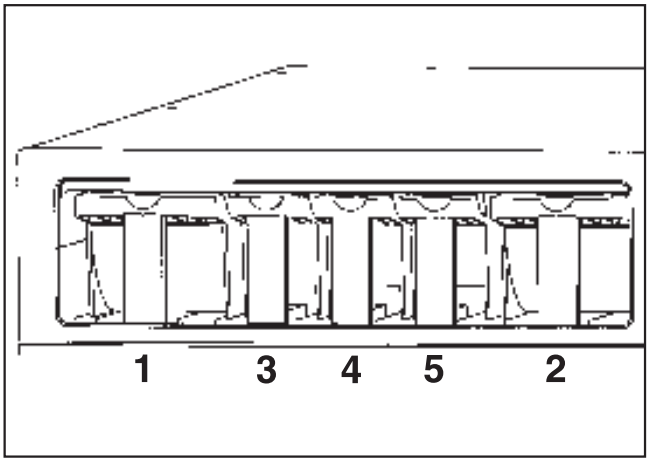

- For the standard programmes add detergent for the Main wash into dispenser compartment **2** - and as required, detergent for a Pre-wash into dispenser compartment **1**, fabric conditioner into compartment **3**, bleach into compartment **4**, and liquid detergent into compartment **5**.

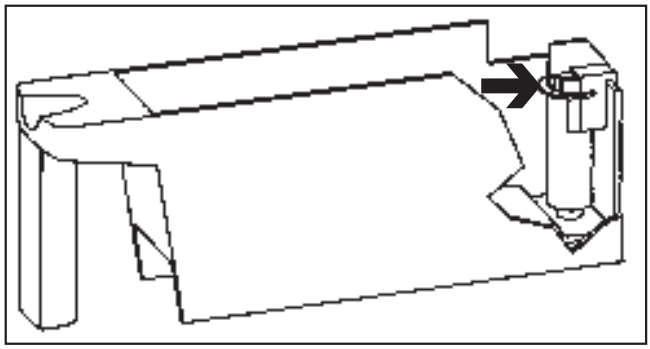

- Do not fill fabric conditioner or bleaching agent higher than the level marker in the relevant dispenser compartment. Otherwise they can run through the siphon into the suds container.

Bleaching agents

Only use bleaching agents on textiles with the △CL symbol on the wash care label.

Liquid bleaching agents may only be placed in the compartment designated for them. This is to ensure that the agent is added automatically at the second rinse. Liquid bleaching agents should only be used with coloureds if the textile manufacturer's wash care label states that the textile is colour fast and suitable for bleaching.

A 3rd rinse cycle must be programmed in if bleach is to be used (see Profitronic programming manual).

⚠ Using chlorine or cleaning agents which contain chlorine will lead to corrosion and in certain circumstances can cause irreparable damage to components.

Only use dyes, colour run, dye removers and descaling agents which are specified as being suitable for use in washing machines. Always observe the manufacturer's instructions carefully.

Detergent dispensing

It is important to avoid adding too much detergent as this causes excessive foam.

– Do not use detergents which create a lot of foam.

– Follow the detergent manufacturer's instructions for use.

The right amount to dispense will depend on the following:

– The amount of laundry

– The water hardness level

– The soiling level of the laundry

The amount to dispense

Take the water hardness into account and follow the detergent manufacturer's instructions on the packaging.

Water hardness levels

Hardness range	Water properties	Hardness level in mmol/l	German scale °d
I	soft	0 - 1.3	0 - 7
II	medium	1.3 - 2.5	7 - 14
III	hard	2.5 - 3.8	14 - 21
IV	very hard	above 3.8	above 21

Check with your local water supplier if you do not know the hardness level in your area.

Gas heated machines

On gas heated machines the suds solution is pumped around the heater elements. This additional agitation of the suds solution creates foam. It is therefore important to use a low-foaming detergent and not to use too much detergent.

If over-foaming occurs use a reduced foam detergent or call in a detergent application specialist.

Select a programme

Standard programmes:

1 Cottons 90°C

2 Cottons 60°C

3 Cottons intensive 60°C

4 Cottons 30°C

5 Cottons intensive 30°C

6 Minimum iron 60°C

7 Minimum iron intensive 60°C

8 Minimum iron 30°C

9 Minimum iron intensive 30°C

10 Delicates

11 Woollens 30°C

12 Handwashable woollens 30°C

13 Separate Starch

14 Separate rinse and spin

15 Separate spin

16 Separate drain

■ Turn the rotary dial to select a programme (e.g. Programme **1** Cottons).

For this example, the following will appear in the display:



Select the Pre-wash, Starch stop or Without spin additional option

■ Confirm the selection of the programme by pressing the rotary selector.

For this example, the following will appear in the display:

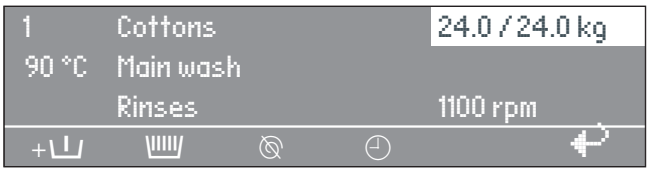

■ If wished you can now select the Pre-wash programme block, by pressing the +⊔ function button.

When the +⊔ function button is pressed, the following will appear in the display:

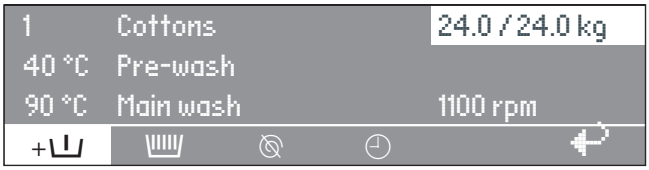

"+⊔" is highlighted.
Press the function button again to deselect the function.

Press the Starch stop button if the laundry is to be starched.

Press the Without spin button if you do not want the laundry to be spun after being rinsed.

If you do not wish to make any further alterations to the programme:

■ Press the ◊ Start button. The programme will start.

If you wish to make alterations before the start of the programme, e.g. to the load size, temperature or spin speed:

Load weight
You can enter the weight of the load manually before the start of the programme.



■ Turn the rotary dial until "Load" (10.0 / 24.00 kg) is highlighted. Press the dial to confirm your selection. Turn the dial to alter the weight and confirm your selection by pressing it.

Temperature in 1 °C increments from cold, 15 to max. 95 °C .

■ Turn the rotary dial to select the "Temperature" field (40°C for pre-wash) and press it to confirm your selection.



■ Turn the rotary dial to alter the temperature value and then press it to confirm your selection.

Spin speed in 25 rpm increments from 0, 300 to max. 1100 (PW 6241) or 1000 rpm (PW 6321).

■ Turn the rotary dial to select the "Spin speed" field (1100 rpm for the final spin) and press it to confirm your selection.

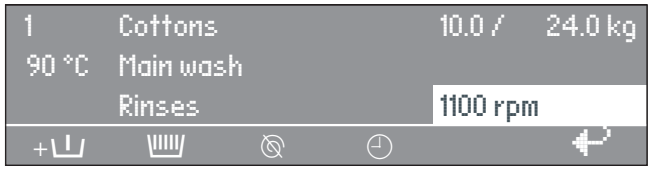

■ Turn the rotary dial to alter the spin speed and then press it to confirm your selection.

Maximum spin speeds

PW 6241	PW 6321
1100 rpm	1000 rpm

■ Press the ◇ Start button. The programme will start.

Once a programme has started the programme sequence will appear in the display.

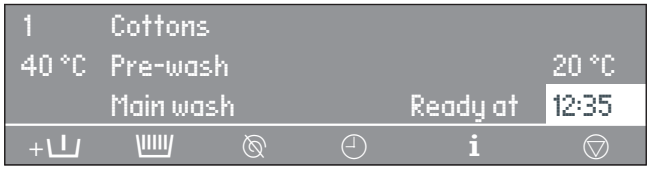

In the 2nd line of the display, pre-wash in this example, the actual suds temperature will also be shown.



Once the pre-wash programme block has finished the programme block for the main wash will appear in the 2nd line of the display together with the actual suds temperature. Under that the following programme block will be listed. Rinse 1 in this example.

The time that the programme will finish is shown on the right hand side of the display.



Pressing the **i** "Information" button will call up further information about the programme e.g.:

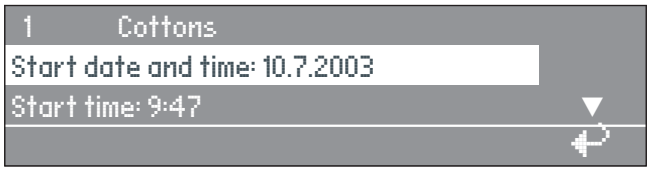







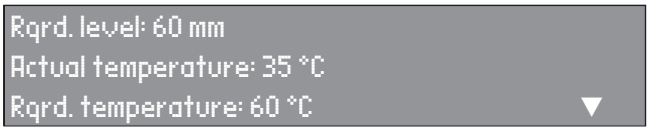



■ Press the ↩ "Back" button to return to the programme sequence display.

Open the door at the end of the programme

The following message will appear in the display at the end of the programme as long as there is no water in the machine and the drum is stationary:

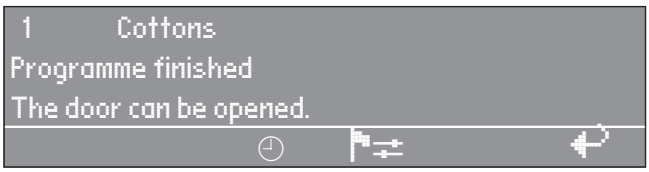

At the same time an acoustic buzzer will sound for 5 seconds to let you know that the programme has finished.

■ Pull the door handle to open the drum door.

Important: If the door will not open press against it and then pull on the handle again. **Do not use force** to open it.

■ Unload the drum.

If the programme was interrupted with water in the drum, or if the programme was stopped, for example, during the spin the following message will appear in the display:

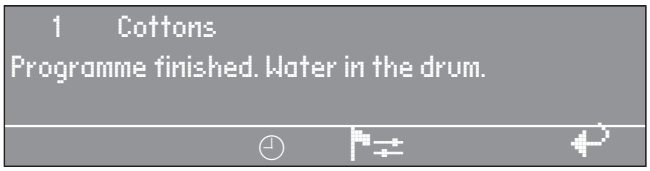

or



⚠ The machine door is locked. Never use force to try and open the door.

- Press the "Water drainage" function button or select the Separate spin programme and press the "Start" button.
  Open the door at the end of the programme.

If no more laundry is to be processed:

- Leave the drum door open to air the machine.
- Switch the machine off by pressing the "Off" **0** button and then switch off at the on-site mains switch.
- Close all stopcocks for water, gas and steam as applicable.

Cards on which a programme has been saved can only be used on the machine type for which they have been written. Unwritten cards can be used universally.

■ Press the "On" **I** button to switch the machine on.

The Welcome screen will appear.

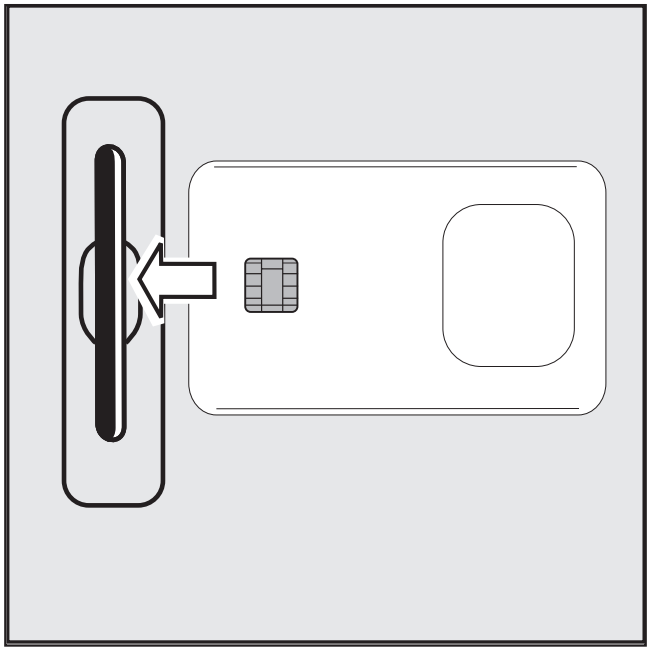

■ Insert the card in the reader.

The programmes listed on the card will appear in the display.



■ Use the rotary selector to highlight the programme you want to use. Press the rotary dial to select the programme you have highlighted.

■ Press the ◊ Start button. The programme will start.

After pressing the ◊ "Start" button you can remove the card from the reader. The programme is deleted from the machine's memory once it has finished.

⚠ Never insert any other card or object into the card reader!

If the card if inserted the wrong way round the following message will appear in the display:

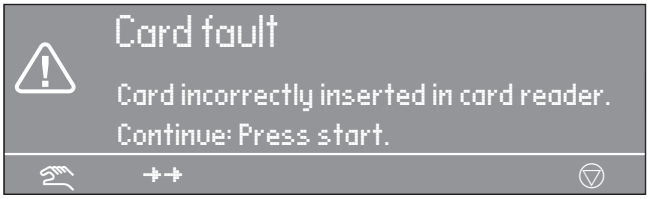

■ Insert the card the right way round in the card reader.

If the card is not the right one for the machine it is being used in the following message will appear in the display:

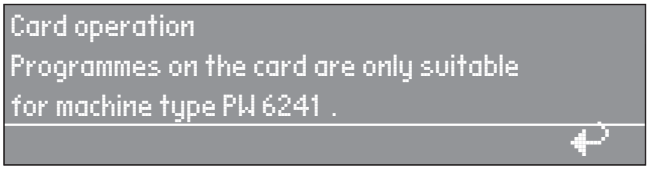

■ Insert the correct card for the machine in the card reader.

Card access operation

Programmes requiring special procedures are written on to a card which is then used to run the programme.
"Card access" has be activated via the supervisor level in the machine.
The machine will then only run programmes by using a card (on which **one** programme has been saved). Programmes in the machine's control unit cannot then be accessed.

Language selection

The language shown in the display can be changed briefly before starting a programme if you wish. To do so use the button underneath the flag symbol.
The language will revert back to the default setting 5 minutes after the end of a programme with the door open.

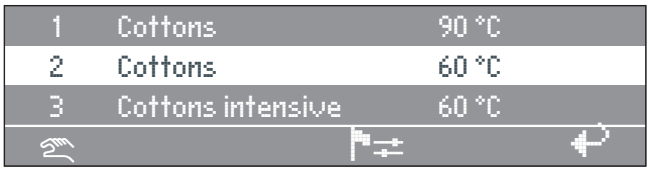

If you press the button the following will appear in the display:

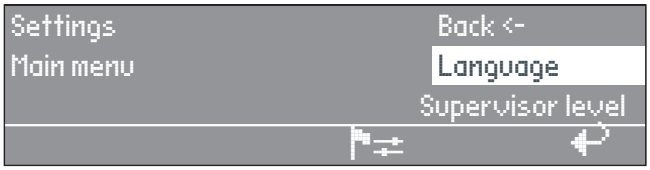

■ Press the rotary dial to confirm your selection of the "Language" menu.



■ Turn the rotary dial to highlight the language you want and then press the dial to confirm your selection.

Start date and time

If you want a programme to start at a later time use the button for "Start date and time".

To set a date and time

After selecting your programme, e.g. Cottons in the example here, the following will appear in the display:

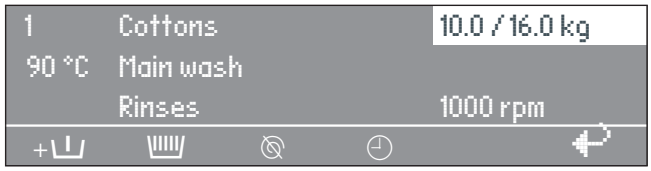

■ Press the "Start date and time" button.

The following (example) will appear in the display:

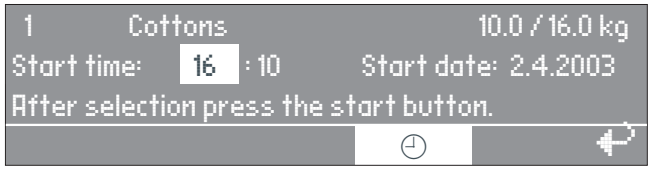

The actual time and date will then appear. The input field for hours will be highlighted.

■ Press the rotary dial to change the hour. Turn the rotary dial to alter the hour and then press it to confirm your selection.

■ Then turn the rotary dial to select the "Minutes" field and press it to confirm your selection.
Turn the dial to alter the minutes and then press it to confirm your selection.

■ Then turn the rotary dial to select the "Start date" field and press it to confirm your selection.
Turn the dial to alter the date and then press it to confirm your selection.

■ Do the same for the month and the year.

After setting the required start date and time:

- Press the start button ◇ and the programme selected will commence at the time specified.

The display will now contain the following information:

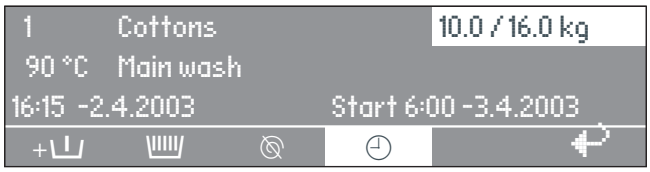

The current time and date as well as the start time will be displayed.

- If the door is opened again you will have to press the start button ◇ again.

To cancel the start time and date function

Press the ◴ "Start date and time" button again or press the ↩ "Back", and any changes will be rejected.

With pre-wash

For heavily soiled laundry the standard programmes **1** to **9**, can have a pre-wash added. To do so press the "Block+" button ⊔.

Pressing the button again deselects the option.

When the "Blockplus" + ⊔ button is pressed, the following will appear in the display:



The "+⊔" field will be highlighted in the display.

Starch

Starching via the dispenser drawer

Starch can be selected with all the standard programmes (except for Separate spin and Separate drain) before starting a programme by selecting the ▥ "Starch stop" option. The ▥ field will be highlighted in the display.

Pressing the button again deselects the option.

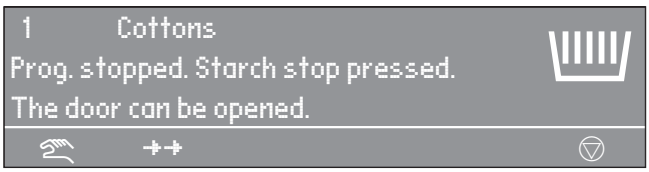

Once the "Starch stop" programme stage is reached the words "Starch stop" will start flashing in the display.

Make up the starch solution following the manufacturer's instructions on the packaging and then add it to the front section of compartment ❀. If necessary dilute the starch with water. The wash time is automatically increased by 4 minutes.

Press the ◇ "Start" button to continue the programme.

Dispensing directly into the drum

Make the starch up following the manufacturer's instructions on the packaging. Once the "Starch stop" programme stage has been reached open the door and add the starch. Close the drum door

The following message will appear in the display again:



Press the start button ◇ and the programme selected will commence

Without spin

"Without spin" can be selected with all the standard programmes (except for Separate spin) before starting a programme by selecting the "Without spin" option.
The field will be highlighted in the display.

Pressing the button again deselects the option.

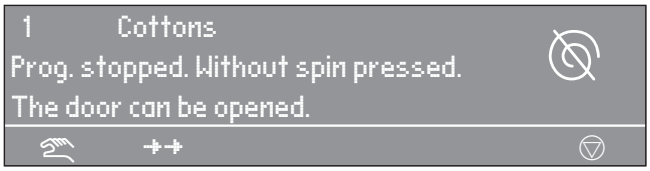

Once the "Without spin" programme stage is reached the words "Without spin" will start flashing in the display.

To finish the programme without spinning and with water left in the drum press the button.

To continue with a spin press the "Start" button.

Programme stop

To halt the programme press the button. The programme remains stationary.



To continue the programme press the "Start" button.

Programme cancellation

Press the button twice in succession to cancel a programme.
If there is still water in the machine or if it was cancelled during spinning the following (example) will appear in the display:

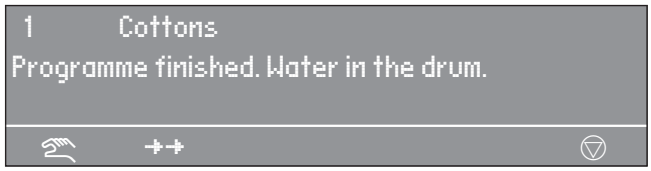

or:

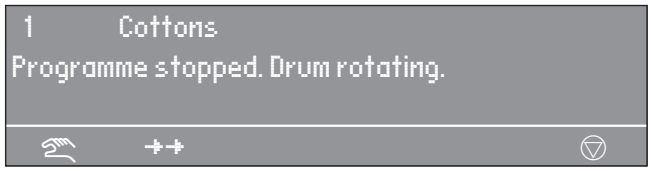

To open the door press the "Water drainage" button or select the Separate spin programme and press the "Start" button.

Programme cancelled with a locked programme

It is not possible to stop or cancel a programme if the programme is locked.



The display will show that the machine is locked if you try to cancel the programme with the ▽ button.

To cancel the programme you will first have to select the 🔓 "Unlocked" function and then enter a password to unlock the programme.

After entering the password the following will show in the display:



Press the 🖫 "Save" button to return to the normal display and the programme can now be cancelled.



Changing the programme order

The order of the programme in progress can be changed or programme blocks can be repeated.

- Press the ▽ button and the programme will stop.



- After pressing the ⇢⇢ button the current area, block or step will appear in the display.

  See also "Programme structure" in the Progamming Manual.





- Turn the rotary dial to alter the area and then press it to confirm your selection. Area: Select 1 Pre-wash, 2 Main wash or 3 Rinses and confirm your selection.
- Turn the rotary dial to alter the block and then press it to confirm your selection. Block: Select Pre-wash 1-10, Main wash 1-10 or Rinses 1-10 and confirm your selection.
- Turn the rotary dial to alter the step and then press it to confirm your selection. Select the required programme step and confirm your selection.
- Press the 🖫 "Save" button and then press ◇ "Start" to reorganise the programme order or press the ↩ "Back" button to override the programme stop and not change the programme order.

Programme / Display	Fabric	Programme sequence	Additional functions
Cottons 90°C 1 Cottons 90°C	Cotton, linen and mixed fibre bed linen and towelling	Pre-wash 40°C optional Main wash 90°C 2 x Rinses Final rinse with hot water* Final spin	+
Cottons 60°C 2 Cottons 60°C	Lightly soiled cotton, linen and mixed fibre bed linen and towelling	Pre-wash 30°C optional Main wash 60°C 2 x Rinses Final rinse with hot water* Final spin	+
Cottons 60°C intensive 3 Cottons intensive 60°C	Cotton, linen and mixed fibre bed linen and towelling	Pre-wash 30°C optional Main wash 60°C 2 x Rinses Final rinse with hot water* Final spin	+
Cottons 30°C 4 Cottons 30°C	Lightly soiled cotton, linen and mixed fibre bed linen and towelling	Pre-wash 30°C optional Main wash 30°C 2 x Rinses Final spin	+
Cottons 30°C intensive 5 Cottons intensive 30°C	Cotton, linen and mixed fibre bed linen and towelling	Pre-wash 30°C optional Main wash 30°C 2 x Rinses Final spin	+
Minimum iron 60°C 6 Minimum iron 60°C	Lightly soiled synthetic and mixed fibres	Pre-wash 30°C optional Main wash 60°C 2 x Rinses Final spin 1 min.	+
Minimum iron 60°C intensive 7 Minimum iron intensive 60°C	Synthetic and mixed fibres	Pre-wash 30°C optional Main wash 60°C 2 x Rinses Final spin 1 min.	+
Minimum iron 30°C 8 Minimum iron 30°C	Lightly soiled synthetic and mixed fibres	Pre-wash 30°C optional Main wash 30°C 2 x Rinses Final spin 1 min.	+
Minimum iron 30°C intensive 9 Minimum iron intensive 30°C	Synthetic and mixed fibres	Pre-wash 30°C optional Main wash 30°C 2 x Rinses Final spin 1 min.	+
Delicates 10 Delicates	Synthetic and artificial fibres	Pre-wash optional Main wash 60°C Drum rhythm "gentle" 2 x Rinses Final spin 1 min.	+
Woollens 30°C 11 Woollens 30°C	Machine washable woollens and wool mixtures	Main wash limited to max. 40°C Wash rhythm "Gentle +" 2 x Rinses Final spin 1 min.	

Standard programme overview

Handwashable woollens 30°C 12 Handwashable woollens 30°C	Washable woollens and wool mixtures	Main wash limited to max. 30°C Wash rhythm "Gentle +" 2 x Rinses Final spin 1 min.	
Separate starch 13 Separate starch			
Separate rinse and spin 14 Separate rinse and spin	Articles which have been washed by hand and only need to be rinsed and spun in the machine.	Rinse Final spin	
Separate spin 15 Separate spin	For articles which have been washed and only need to be spun	Final spin	
Separate drain 16 Separate drain		Drainage	

*** Hot water rinse**
The **1** Cottons 90°C, **2** Cottons 60°C and **3** Cottons 60°C intensive standard programmes are programmed for hot water rinses. If the machine is connected to an on-site hot water supply it is advisable to carry out the final rinse with hot water.
The residual water in the laundry will be lower.
- The laundry will be warm.
This will lead to savings in both time and energy if the laundry is then dried in a tumble dryer or passed through a rotary ironer immediately after washing.
To deselect the hot water rinse please read the Programming manual.

Liquid dispensers

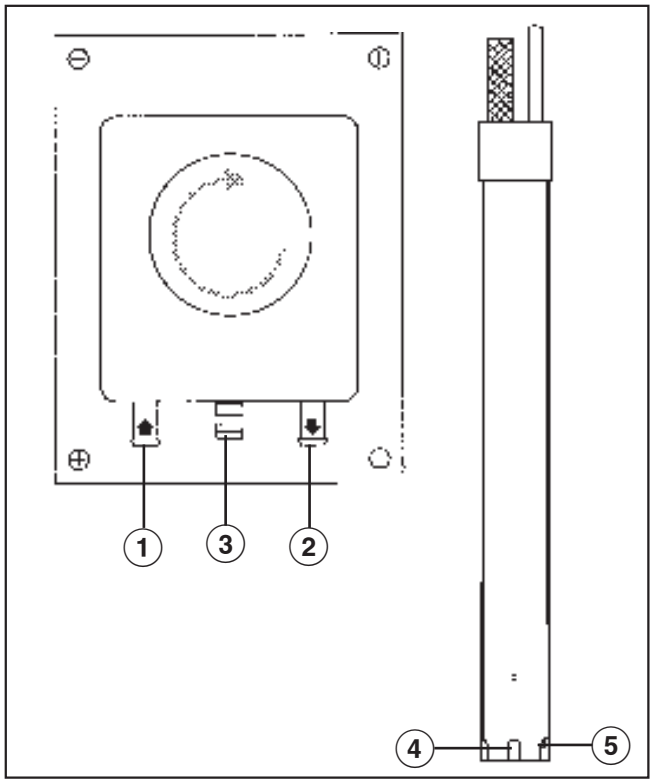

① Hose connection socket (suction side)

② Hose connection socket (pressure side)

③ Leakage outlet (in case of damaged hose)

④ Suction inlet

⑤ Level checker for empty indicator. The pump and the machine will switch off automatically if a liquid agent container is empty.

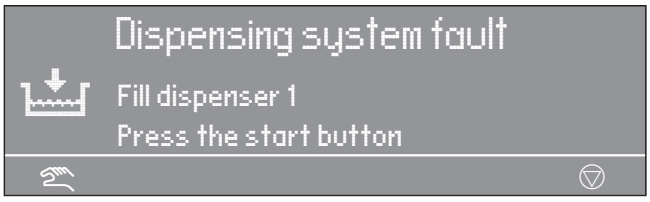

The machine will warn you that the liquid dispensing agent level is insufficient.

The programme can be restarted after refilling the liquid agent container by pressing the ◇ "Start" button.

To deselect the liquid dispensing system

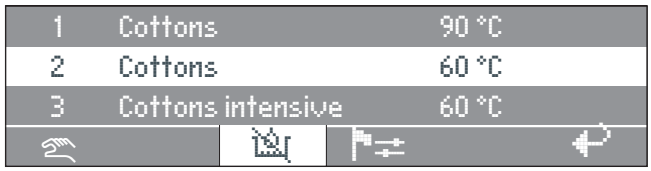

You can switch off the liquid dispensing system manually before starting a programme by setting the "Dispensing" system to off.

Once the programme has started dispensing will not take place via the dispenser pumps and the following will appear in the display:

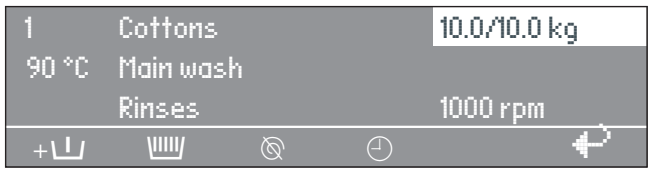

Dispensing amount

Please follow the manufacturer's instructions on the packaging for dispensing requirements.

⚠ This is particularly important when using a combination of cleaning agents and special application products. Only use the product for the application described by the manufacturer, to avoid any material damage or the occurrence of strong chemical reactions. Confirm with the detergent manufacturer that their product can be used in combination with another type of product.

Liquid agents should be allowed to settle to room temperature before use to ensure that their viscosity level is correct and thus ensure the correct amount is dispensed.

Commissioning the dispensing pumps

Before the liquid dispensing pumps can be used the liquid agent must be drawn up into the system and the amount to be dispensed set.

Dispenser calibration

The dispensers need to be calibrated to ensure the dispenser pumps supply the correct amount of liquid agent.

To calibrate the dispensers with the machine switched off:

- Press and hold the rotary dial in.
- Then switch the machine on with the "On" switch.

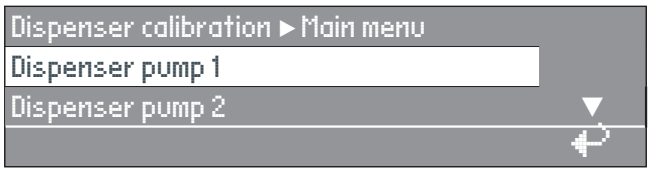

Selection choice: Dispenser pumps 1 to 13

After selecting a dispenser pump the following message will appear in the display:

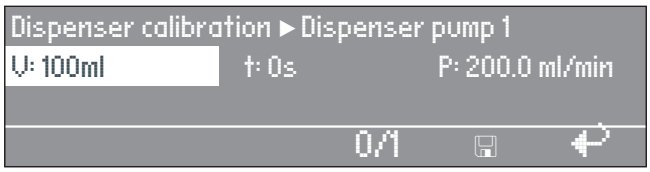

The amount to dispense can be set between 0 and 9999 ml in 1 ml increments.

- Set the amount to dispense.
- Press the rotary dial 0/1 and the dispenser pump will start drawing liquid.

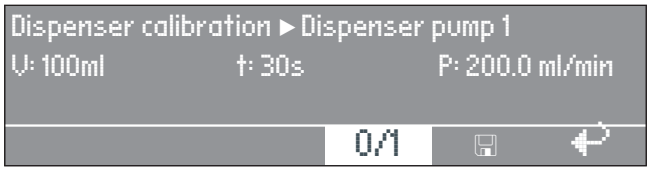

The dispensing process finishes once the dispensing amount is reached by pressing the 0/1 button, or stops automatically after 60 seconds. The duration t measured will be shown in seconds and the amount drawn P will be shown in ml/min.

- Press the 🖫 "Save" button to save the values measured in memory.

Cleaning and maintaining the dispensing system

The dispensing system should be flushed through with clean warm water every two weeks and before any longer down-times to prevent the risk of blockages and corrosion.

- The suction pipes should be cleaned through with water.
- Place the suction pipes in a container of hot water (40 - 50°C).
- Then use the dispenser calibration system to operate each pump until the dispensing system is thoroughly flushed through.
- After reconnecting all parts check all connections, hoses, dispensers and seals for leakages.

Peak load cut-out

If the peak-load cut out function is activated the heating will switch itself off and any programme running will be stopped. The following message will appear in the display:

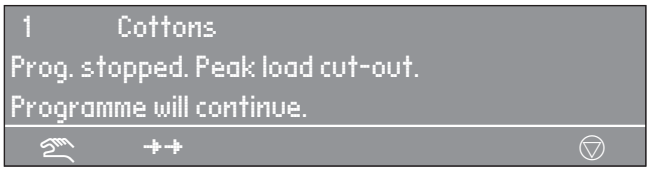

Once the peak load has finished the programme will continue automatically as before.

PC connection

This machine can be linked to a PC.

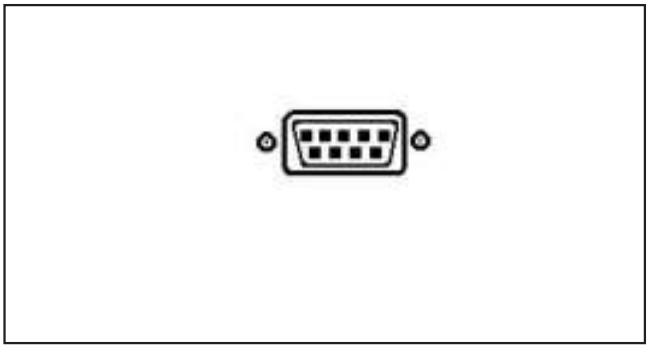

The connection socket is located at the rear of the machine.

Programme changes can be made using a computer, or new programmes can be down-loaded from it.
It can also be used for printing details about complete programmes or areas of a programme.
An editor programme is available from Miele.

Operating data

By pressing the "Operating data" button the module can be used to read or delete operating data either before the start of a programme, or after it has finished.

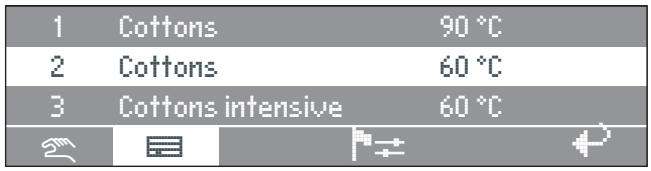

After pressing the button the following will appear in the display:

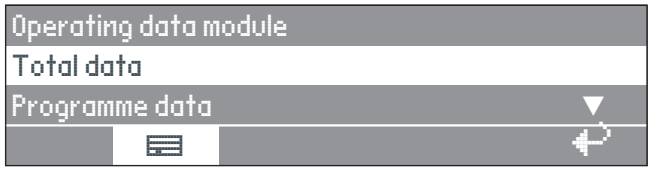

Selection choice:

– Total data

In this option all programme data is collated and summarised.

– Programme data

Programme data contains all the data called up during a programme.

– Delete data

- Module (Total data including programme data)

- Total data (only delete total data)

- Programme data (only delete programme data)

Pressing the button again deselects the "Operating data" option.

If there is no more memory available in the operating data module a message will appear after pressing the "Start" button to say that the operating data will be overwritten.

If you press the "Back" button or do not press the "Start" button within 30 seconds and the display will revert to the way it was before starting the programme.

Total data

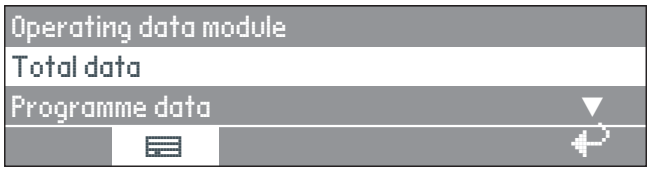

After selecting Total data the following (example) will appear in the display:

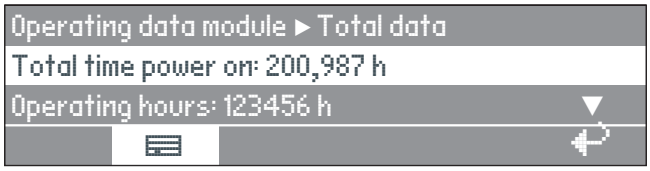

Other options:

Total time power on: 200,987 h
Operating hours: 123,456 h
Duration heating active: 123,456 h
Duration drive motor active: 93,456 h
Programme starts: 23,456
Programme stops: 567
Programme cancellations: 67
Water volume: 1,234,567 l
Amount of laundry: 1,234,567 kg
Liquid agent: 2,345 l
Energy: 12,345,678 kWh

Programme data

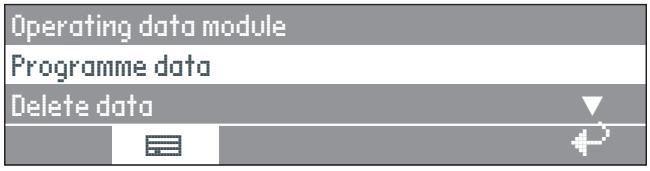

After selecting Programme data the following (example) will appear in the display:

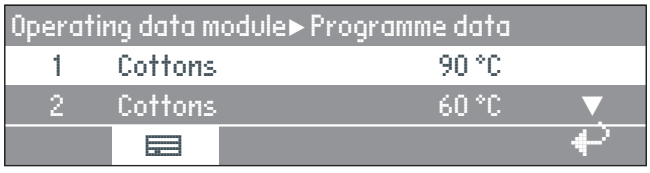

Select the programme you want from the list and press the rotary dial to call up a list of all programme starts including date and start time for that programme (Cottons 90°C in the example).



Select the required programme start from the list for programme 1 Cottons and confirm your choice by pressing the rotary dial.



Other options:

Town: Abingdon
Serial number: 12345678
Machine type: PW 6321
Amount of laundry: 13 kg
+ Button: Activated
Starch stop button: Activated
Without spin button: Not activated
Programme start: 11:30
Programme finished: 12:05
Total operating time: 0 h 35 min
Electrical energy: 12.5 kWh
Gas energy: 0 kWh
Steam energy: 0 kWh
Total volume of water: 140 l
Max. water temperature: 95 °C
Max. drain temperature: 45 °C
Programme change: 2 (after making your selection and pressing the rotary dial only the last 3 stops and starts will be displayed.)
Programme fault: None (only the last 3 faults are saved.)
Area 1: Pre-wash (after making your selection and pressing the rotary dial you can display the area or the block.)
Operating time: 6 min
Water volume: 20 l
Dispensing phase 1: Amount ml (after making your selection and pressing the rotary dial 6 dispensings are displayed.)
Max. temperature: 12 °C
Holding time: 6 min
Dispensing phase 2: No

Delete data

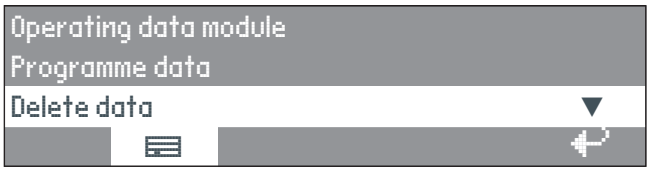

After selecting Delete data the following message will appear in the display:

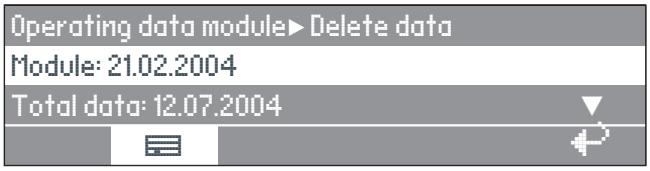

The module menu option can be used to delete the total data and programme data from the operating data memory.
The total data option can only be used to delete the total data from the operating data. The programme data option can only be used to delete programme data from the operating data.

After making your selection and pressing the rotary dial you will be prompted to enter your password.



After keying in your password or inserting your supervisor level key card in the reader the following security prompt will appear in the display:

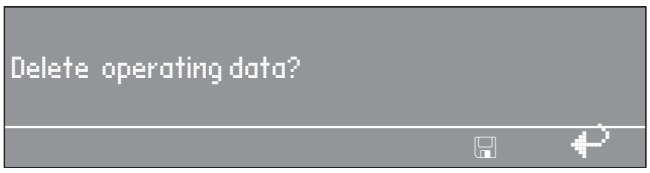

After pressing the 🖫 button the data will be deleted!

Load sensor

If the machine has been equipped with a load module the weight of the laundry in the machine will be displayed in 0.2 kg increments. The maximum load for the programme selected will show next to the actual weight in the drum.

If when the drum is empty the load display is not showing "00,0", you will need to press the **-> I <-** " to reset it

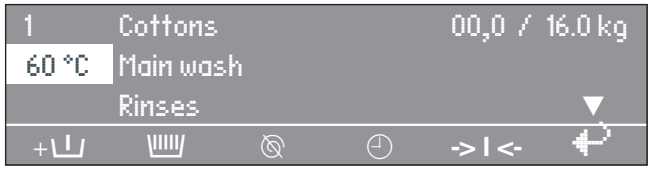

If after calibrating the sensor to 0 there was still laundry in the drum the following will appear in the display:

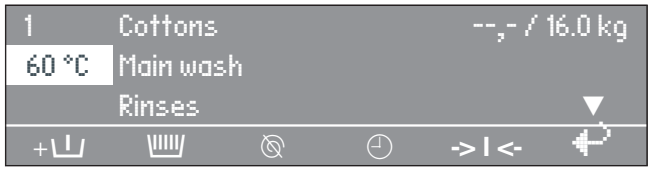

Press the **-> I <-** button again to set it to 0.

If there is too much laundry in the drum, e.g. because it is wet, a nominal load will be calculated after starting the programme and this value will also be saved by the operating data module.

At the end of the programme when the drum has stopped rotating the display will show the residual moisture content of the laundry.

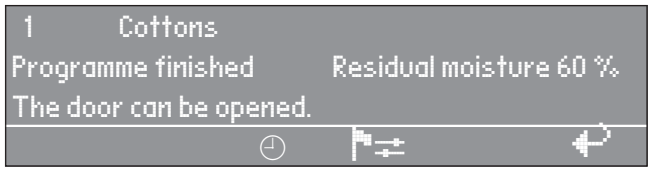

The door will not open

■ Press against the door handle and at the same time switch the machine off and then on again. Then try to open the door again.

If you still cannot open the door:

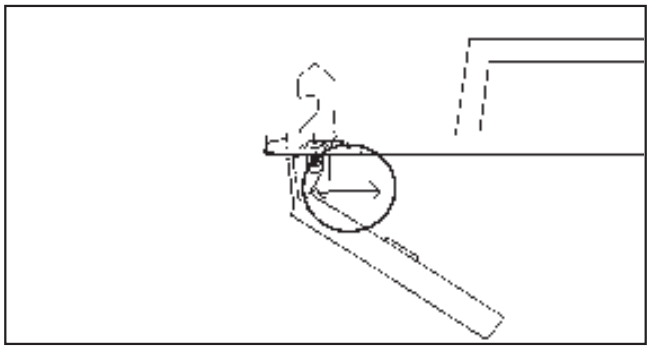

The door handle safety mechanism has disingaged itself. The door handle cannot be opened or closed.

The safety mechanism is designed to protect the handle and the lock from damage, for instance, if too much force is being used in an attempt to open the door.

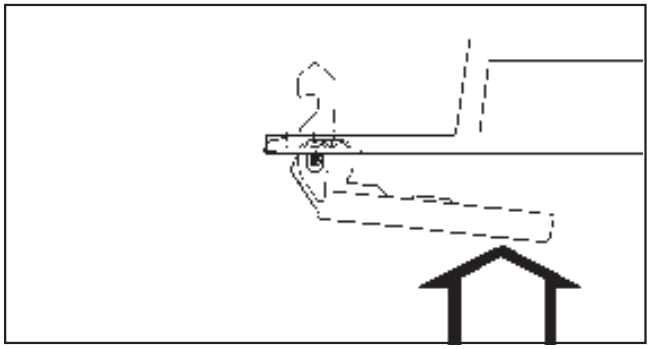

■ Press firmly against the door handle until you clearly hear the safety mechanism engage.

You will now be able to open and close the door again (as long as there is no water in the machine).

Power cut during a wash programme
Emergency door release

With a short power cut:
The programme remains in the last position, and when power is restored the following message appears in the display:



■ Press the start button ◇ and the programme selected will continue.

With an extended power cut:

■ Switch the machine off.

■ Switch off the mains supply at the on-site mains switch.

■ Close all stopcocks for water, gas and steam as applicable.

To remove the laundry the drain valve will need to be opened manually and the drum door unlocked manually.



■ Open the drain valve by partially opening the venting screw (spanner size 17 mm) at the rear of the machine. Do not unscrew it completely. Drain off the suds. Take care as some water will seep out of the screw opening (approx. 100 mm). This should be collected in a suitable container.

■ Tighten up the venting screw again and check that there is no leak.



■ First position the screwdriver in the opening, then push it in and hold it securely.
Press against the door handle with your right hand, and then pull on the door handle to open the door.
Never use force to open the door!

■ Remove the laundry

Possible reasons for increased levels of foaming

– Detergent type

■ Only use detergents formulated for commercial washer-extractors. Domestic laundry detergents are not suitable.

– Using too much detergent

■ Follow the manufacturer's dosage recommendations on the packaging and take local water hardness levels into account.

– Heavy foaming detergent

■ Use a low foaming detergent or contact your detergent supplier for advice.

– Very soft water

■ In areas with very soft water (hardness level 1) dispense less detergent as specified by the detergent manufacturer.

– Soiling level of the laundry

■ For lightly soiled laundry dispense less detergent in accordance with the detergent manufacturer's instructions.

– Residues e.g. detergent on the laundry

■ Run a pre-wash without detergent and without selecting a temperature.
Laundry which has been soaked before washing must be thoroughly rinsed before running a wash programme.

– Small loads

■ Reduce the amount of detergent dispensed according to the size of the load.

– Drum speed too high during the wash (Profitronic controls)

■ Reduce the drum speed and the wash rhythm.

– Gas-heated washer-extractors

On gas heated machines the suds solution is pumped around the heater elements. This additional movement of the suds can produce extra foam.

■ Follow the dispensing instructions given above.

■ Use a low lather detergent.

■ On Profitronic controlled machines and in special circumstances it is possible to reduce the drum speed and the wash rhythm during the heating-up phase.

Large articles of laundry stretching during the spin cycle

Large articles of laundry (e.g. table cloths) can stretch during the spin cycle. This can generally be prevented by reprogramming the machine.

Please contact the Miele Service Department.

Service interval

If after switching the machine the following message appears in the display the machine will need to be serviced by the Miele Service Department.



The display will go out after 5 minutes.

Error messages

⚠ Repairs to electrical, gas or steam operated machines may only be carried out by a suitably qualified person in accordance with national and local safety regulations. In the U.K. repairs to gas heated machines must only be carried out by a Corgi registered technician.

A message will appear in the display if there is a problem either before starting a programme or once it has started:



The display remains dark.
There is no power to the machine.

- Check the mains switch and the on-site fuses.



- Once power has been restored press the "◇ Start" button.

This error message can also indicate that the winding on the motor has overheated.

- Allow the motor to cool down.



- Check the stopcock and then press the "◇ Start" button.

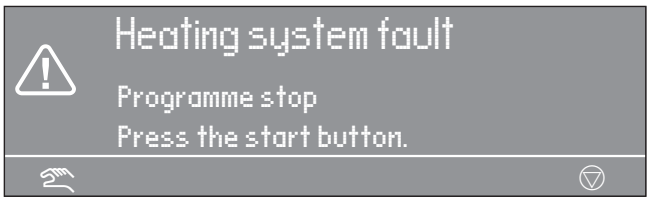

■ To continue the programme with heating press the ◊ "Start" button. If a disinfection programme was running the programme will be cancelled if this message appears. Call the Service Department.



■ Allow the motor to cool down.



The imbalance is too great and the imbalance switch has been activated.

■ Switch the machine off and on again. Then press the ◊ "Start" button.

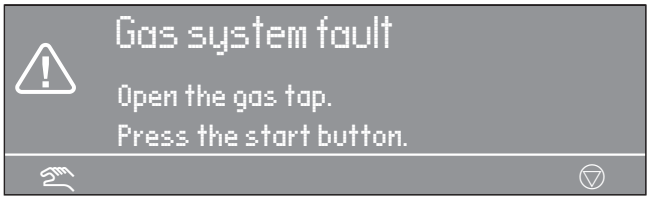

If this message appears before a programme has been started:

■ Open the gas tap and then press the "◊ Start" button.

If this message appears during a programme the pressure in the gas supply has dropped because of other gas heated appliances operating at the same time.

■ Press the ◊ "Start" button.

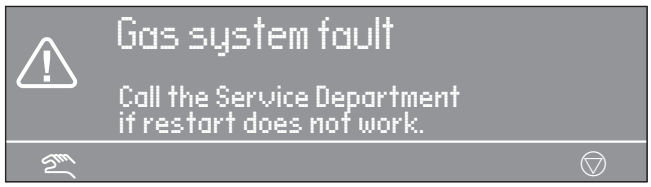

■ If the programme still will not start please call the Service Department.



Clean the lint filter as described in "Cleaning and care" and then press the ◊ "Start" button.
On gas heated machines heavy foaming can lead to a fault.

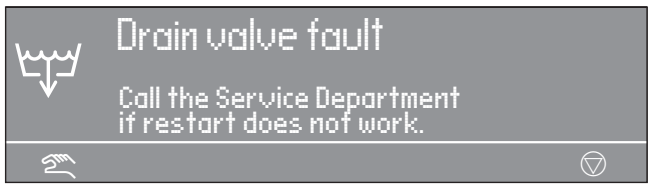

■ Check the on-site drainage system and then press the "◊ Start" button.

A defective drain valve must be repaired by a Miele Service technician only.

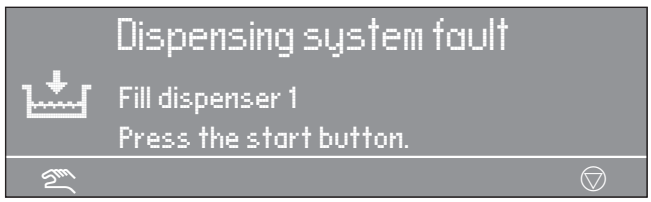

Replace the empty container with a full one.

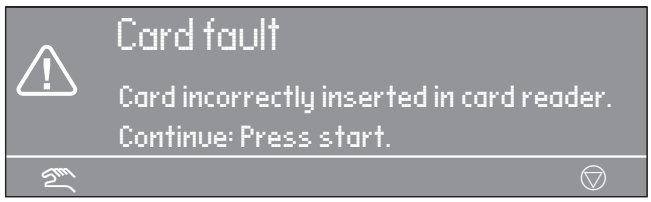

■ Insert the card the right way round in the card reader.

After sales service

In the event of any faults please contact your Dealer or the nearest Service Department.

When contacting the Service Department, please quote the Model (Typ), Serial number (Fabr.Nr) and Material number (M.Nr) of your machine. These are shown on the data plate.

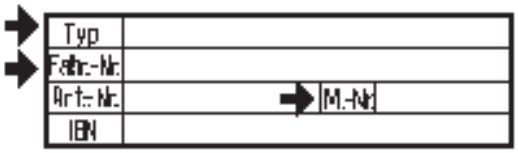

This is visible above the door aperture or

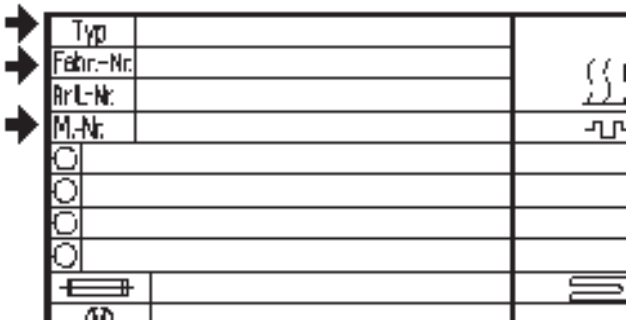

at the back of the machine.

Please let the Service Department know any error message that has appeared in the display.

Should you require spare parts ensure that you only use **original Miele Spare Parts** (and remember to let the Spare Parts Department know the model number, serial number and material number of your machine).

The machine should be cleaned and checked over immediately after use where possible.

⚠ Do not use a high pressure cleaner or hose to clean the machine.

The housing, control panel and any plastic components should be cleaned using a suitable mild cleaning agent, applied with a soft damp cloth. Rub dry with a soft cloth after cleaning.

Do not use abrasive cleaning agents as they will damage the surface material.

Parts of the housing made from stainless steel can be cleaned using a suitable proprietary stainless steel cleaning agent.

Any deposits on the door seals should be wiped off using a damp cloth.

Clean the detergent dispenser, dispenser compartments and siphons

The detergent dispenser, dispenser compartments and siphons must be cleaned after each use with warm water to thoroughly remove any residues of detergents or other agents. If the machine is not going to be used for a while the detergent dispenser should be left open to air the compartment. The siphon in the dispenser compartment for fabric conditioner should also be cleaned.

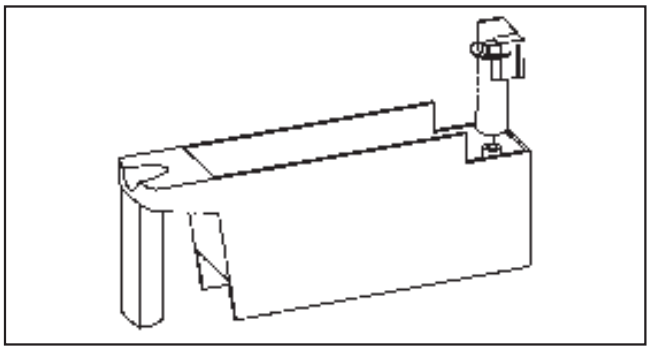

Remove the siphon and clean with hot water. Then put it back in place.

The **grille** over the cooling fan at the back of the machine should be checked for soiling from time to time and cleaned if necessary.

Rust

The drum and suds container are manufactured from rust free stainless steel. Water with a very high iron content, or foreign objects such as paper clips, metal buttons etc. which get into the drum with the laundry can cause superficial rusting in the drum and suds container.
To prevent this happening the drum and suds container should be checked and cleaned regularly and if rusting does occur it should be removed using a proprietary cleaning agent for stainless steel.
The door seals should be checked for foreign objects regularly and cleaned as described above.

Leave the door ajar after cleaning to allow the machine to dry.

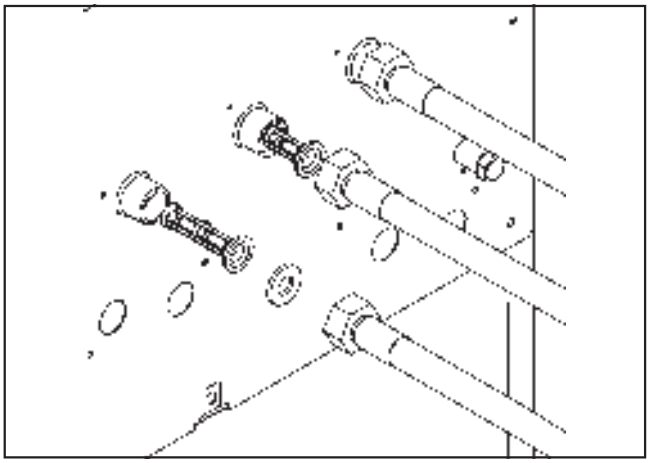

The **filters** in the water inlet valve should be checked from time to time for soiling and cleaned if necessary.

Cleaning the filter
This only applies to gas heated machines

The filter should be checked regularly for and cleaned when necessary.

⚠ Carry out this check only after a programme has finished and the suds container has been emptied.

A blocked filter is indicated by a flashing fault message in the display.



Clean the filter as follows:

- Place a suitable 2 litre capacity container below the filter.

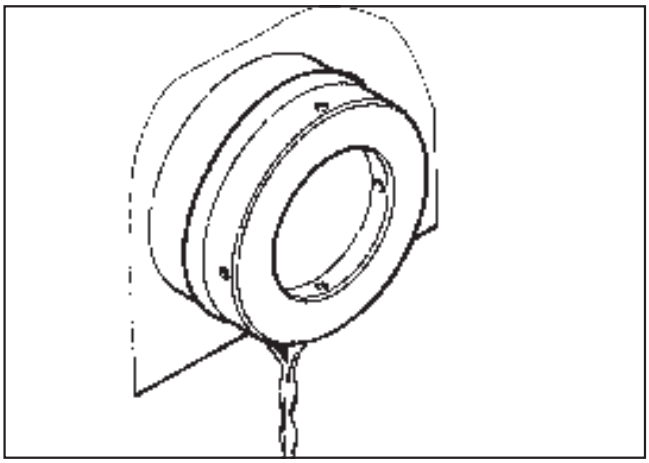

- Turn the lid a half to a full turn anti-clockwise to open the filter.
  Any water in the filter housing will then drain out.

Warning - the water may be hot.

- Empty the dish and repeat as many times as is necessary.

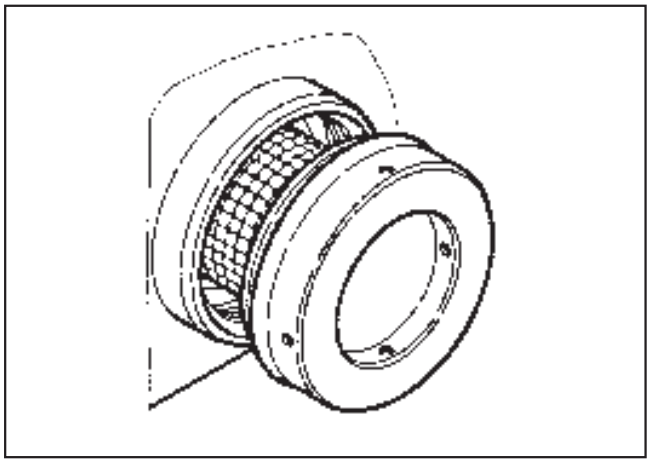

- When no more water runs out, unscrew the lid completely. The filter is attached to the lid.
- Clean the filter and the inner housing of the filter compartment.
- Replace the filter and tighten the lid making sure it is secure.

Drum bearings

Once the service interval has been reached the following message will appear in the display:



Press the ↩ "Back" button to get rid of the message in the display. This message will appear in the display each time you switch the machine on until the service work has been carried out by the Miele service technician.

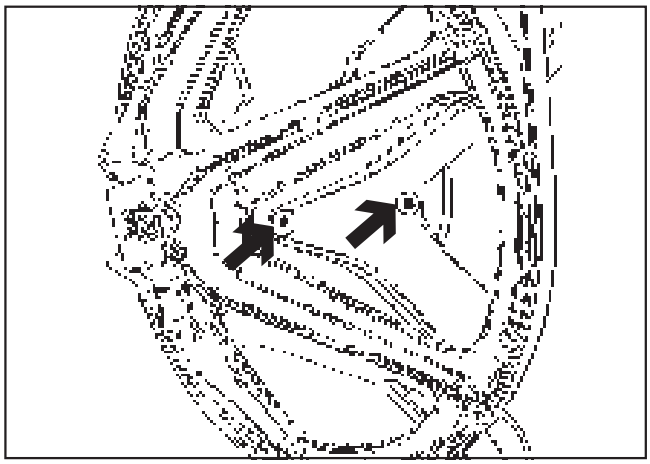

The grease nipples on the **drum bearings** need to be lubricated after approx. 1000 operating hours with **Arcanol L 100**.

When the machine is not in use

If the machine is not going to be used for a longer period of time (4 weeks or more) the drum bearings should be lubricated as described above and the drum rotated a few turns. The drum should then be rotated again every 4 weeks to prevent damage to the bearings.

Explanation of symbols on the data plate

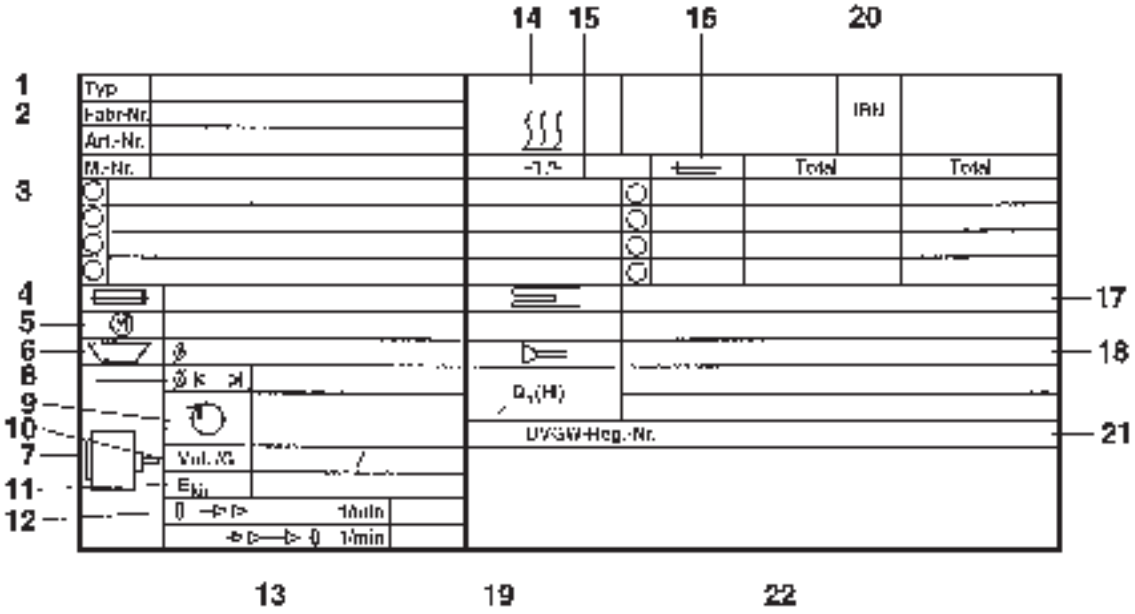

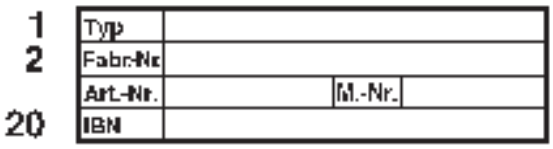

1 Machine type
2 Serial number/Year of manufacture*
3 Voltage/Frequency
4 Mains fuse rating
5 Drive motor
6 Plate diameter* /No. of plates*
7 Drum data
8 Drum diameter/Drum depth
9 Spin speed
10 Drum volume/Laundry dry weight
11 Kinetic energy
12 Run-up time
13 Braking time
14 Heating
15 Electric heating
16 Fuse rating (on-site)
17 Steam heating, indirect
18 Steam heating, direct
19 Gas heating
20 Commissioning date
21 Water regulations registration no.
22 Field for test certification/e.g. CE-.....
(Product ID-Number/Gas)
*) does not apply to this machine

Noise emission

Registered on the A scale

	Washing	Spinning
PW 6241	60 dB	82 dB
PW 6321	60 dB	80 dB

Measured in Germany in accordance with DIN (IEC) 45 635. Machine noise regulations, 3. GSGV º 1 1.a

This machine must be installed by an authorised technician only. In the U.K. gas heated machines must be installed by a Corgi registered fitter only.

⚠ This machine is not designed for washing items which have been treated with dangerous or flammable substances.

The machine must be level and secure after installation (see installation diagram supplied with the machine).

To avoid the risk of frost damage do not install this machine in a room where there is a risk of frost occuring.

Do not install the machine on carpeted flooring as the carpet pile can hinder the free flow of air into the ventilation gaps at the bottom of the machine.

Transit fittings

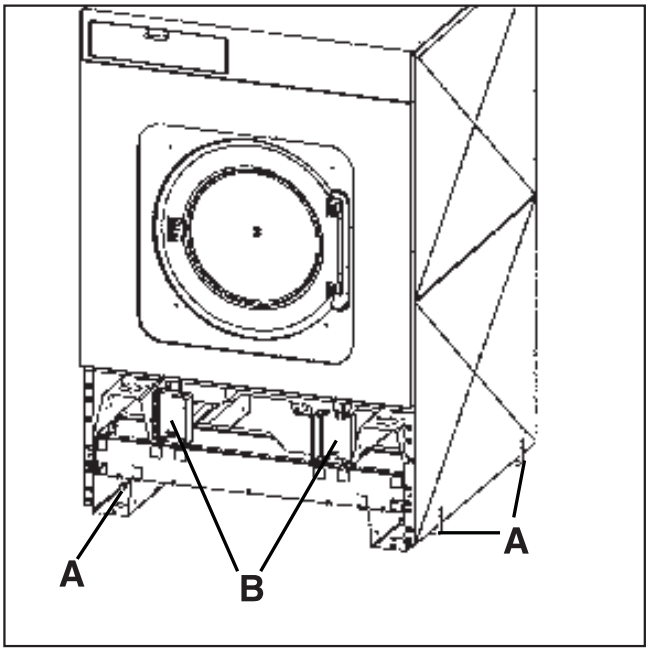

The red-marked transit fittings "**A**" on the diagram, 2 at the front and 2 at the rear of the machine sides are each secured in position with a hex screw. Remove these.

The red-marked transit fittings "**B**" on the diagram, 2 at the front and 2 at the rear are each fixed with 3 hex screws.

Do not remove these until the machine has been set in its final position. The upper screw from the front transport fittings should be screwed back in afterwards.

To remove the transit fittings "**B**", detach the front service panel and the rear panel from the machine. Unscrew the 3 hex screws from the bottom edge of the front service panel to take it off. Unscrew 8 hex screws from the rear panel to take it off.

The front plinth facing is secured to the rear panel, and the plinth facing for the rear panel is under the machine lid. Both panels should be fitted after machine has been installed. The screws are supplied in the accessories pack.

The plinths for the front and rear panels are secured with the rear panel, and should be fitted when the machine has been installed. The screws are found in the pre-drilled holes.

Store the transit fittings in a safe place for future use. They will need to be refitted should the machine every need to be moved to another location.

The machine must not be moved without all the outer panels in place.

Plumbing

Connection must be made to the water supply via a stopcock which conforms to current local and national regulations. This work must be carried out by an authorised person.

Water inlet / drainage

See the enclosed installation diagram for instructions on how to connect the machine to the water inlet and to the drainage system.

To ensure trouble free operation of the machine the flow pressure must be at least 100 kPa (1 bar) and not exceed 1000 kPa (10 bar).

The inlet pressure tested hoses supplied with the machine must be used for connection to the water supply.

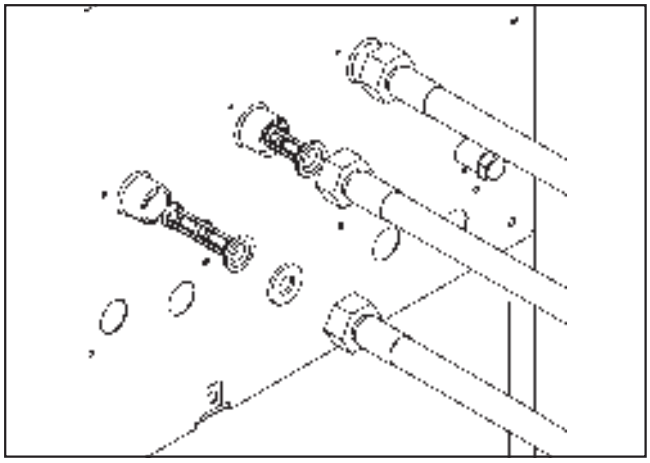

Before connecting the inlet hoses to the machine ensure that the filters and seals supplied in the accessories pack have been correctly fitted.

If replacing an inlet hose only use a hose tested to at least 7000 kPa (70 bar) pressure, and for a water temperature of at least 90 °C. This also applies to all fittings. Miele original parts fulfil these requirements.

Water taken into the machine must not exceed a temperature of 70°C.

Connection to cold water supply only
-See installation diagram supplied with the machine.-

Electrical connection

The electrical connection must only be carried out by a suitably qualified electrician in accordance with current local and national safety regulations (EN 60204 / and BS 7651 in the UK).

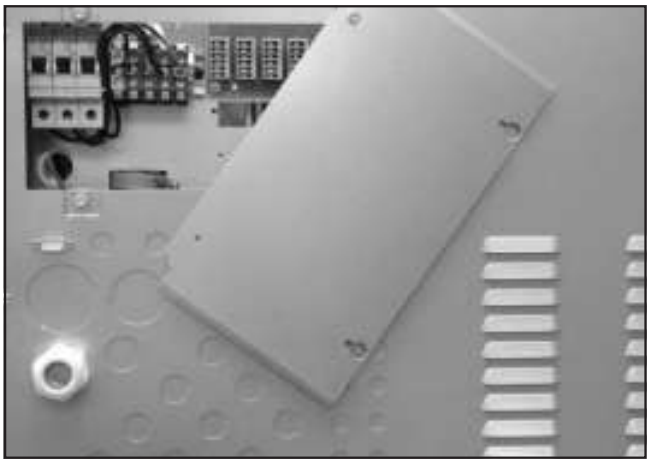

The connection points are located behind a cover.

The machine is supplied ex-works for 3N AC 50-60 Hz. See data plate for details.

It is also available in the following versions: 3 N AC 380-415 V 50-60 Hz
3 AC 220-240 V 50-60 Hz

The machines are supplied ex-works as follows:
24 kW (PW 6241),
30 kW (PW 6321)

The heating will only be activated with a minimum suds level of 110 mm column of water.

The motor is protected by a winding to prevent it overheating.

Connection should be made in accordance with the wiring diagram and the installation diagram to a suitable isolator, with an on-off switch which is easily accessible for servicing. These diagrams are important for the correct electrical functioning of the machine.

Steam connection

Steam connection must only be carried out by an authorised installer. See installation diagram and installation instructions supplied with the machine.

Gas connection

This work must be carried out by an authorised person in accordance with local and national safety regulations. This must be a Corgi registered technician in the UK. See installation diagram and installation instructions supplied with the machine.

The gas group to which the machine has been set at the factory is given on the Gas Data label on the rear of the machine.

If the machine is converted for a different gas group, or to liquid gas, a conversion kit is required. This is available from the Spare Parts Department. When ordering please quote the model and serial number of the machine, as well as the gas type, group and connection pressure in the country of installation.
Please follow the installation instructions carefully. To ensure safety any conversion work must only be carried out by an authorised technician, e.g. Corgi registered in the UK.

⚠ Do not attempt to repair or work on gas heated machines yourself! In the event of a fault please contact the Miele Service Department.

After setting up and connecting the machine ensure that all outer casing parts are correctly fitted back into position.

1. Sort the laundry

Only use this machine to wash items which are specified by the manufacturer to be machine-washable on the wash-care label. Any other applications may be dangerous. The manufacturer is not liable for damage resulting from improper use or operation.

■ Empty any pockets.

2. Switch the machine on and load the drum

■ Press the "On" button **I** in

■ Open the drum door and load the laundry

■ Close the drum door

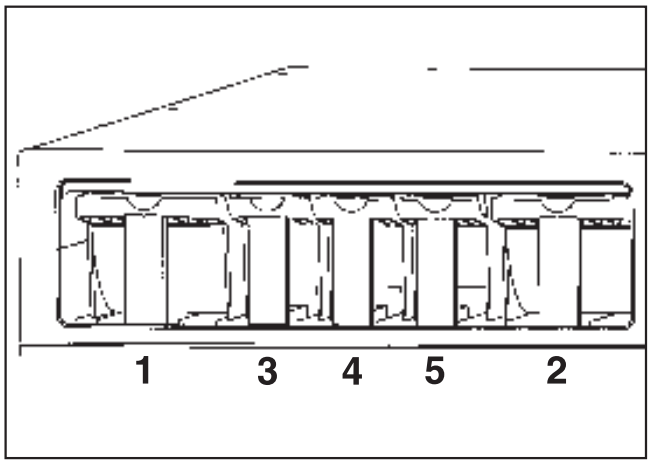

3. Add cleaning agent

■ Dispense agents as follows: For the standard programmes add detergent for the Main wash into dispenser compartment **2** - and as required, detergent for a Pre-wash into dispenser compartment **1**, fabric conditioner into compartment **3**, bleach into compartment **4**, and liquid detergent into compartment **5**.

4. Select a programme using the rotary selector

Standard programmes:
1 Cottons 90°C
2 Cottons 60°C
3 Cottons intensive 60°C
4 Cottons 30°C
5 Cottons intensive 30°C
6 Minimum iron 60°C
7 Minimum iron intensive 60°C
8 Minimum iron 30°C
9 Minimum iron intensive 30°C
10 Delicates
11 Woollens 30°C
12 Handwashable woollens 30°C
13 Separate starch
14 Separate rinse and spin
15 Separate spin
16 Separate drain

5. Press the start button ◇ and the programme selected will commence

6. The following message will appear in the display when the programme has finished

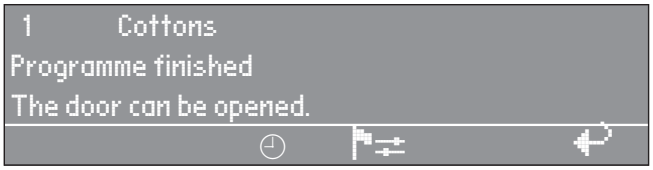

■ To open the door pull on the handle and then unload the drum

7. If no more laundry is to be processed:

■ Leave the drum open to air the machine

■ Switch the machine off by pressing the "Off" **0** button

Miele
PROFESSIONAL

United Kingdom:
Miele Co. Ltd.
Fairacres, Marcham Road, Abingdon, Oxon, OX14 1TW
tel. Abingdon (01235) 554455 - fax (01235) 554477
Service Office, tel. Abingdon (01235) 554466
Internet: www.miele.co.uk

Alteration rights reserved 48.05

M.-Nr. 06 572 490 /01