Apach

SPARE PARTS CATALOGUE
ERSATZTEILKATALOG
CATALOGUE PIECES DETACHEES
CATALOGO PARTI RICAMBIO
CATALOGO DE PIEZAS DE RECAMBIO
CATALOGO PECAS DE REPOSICAO

AF 402

08-06-2011

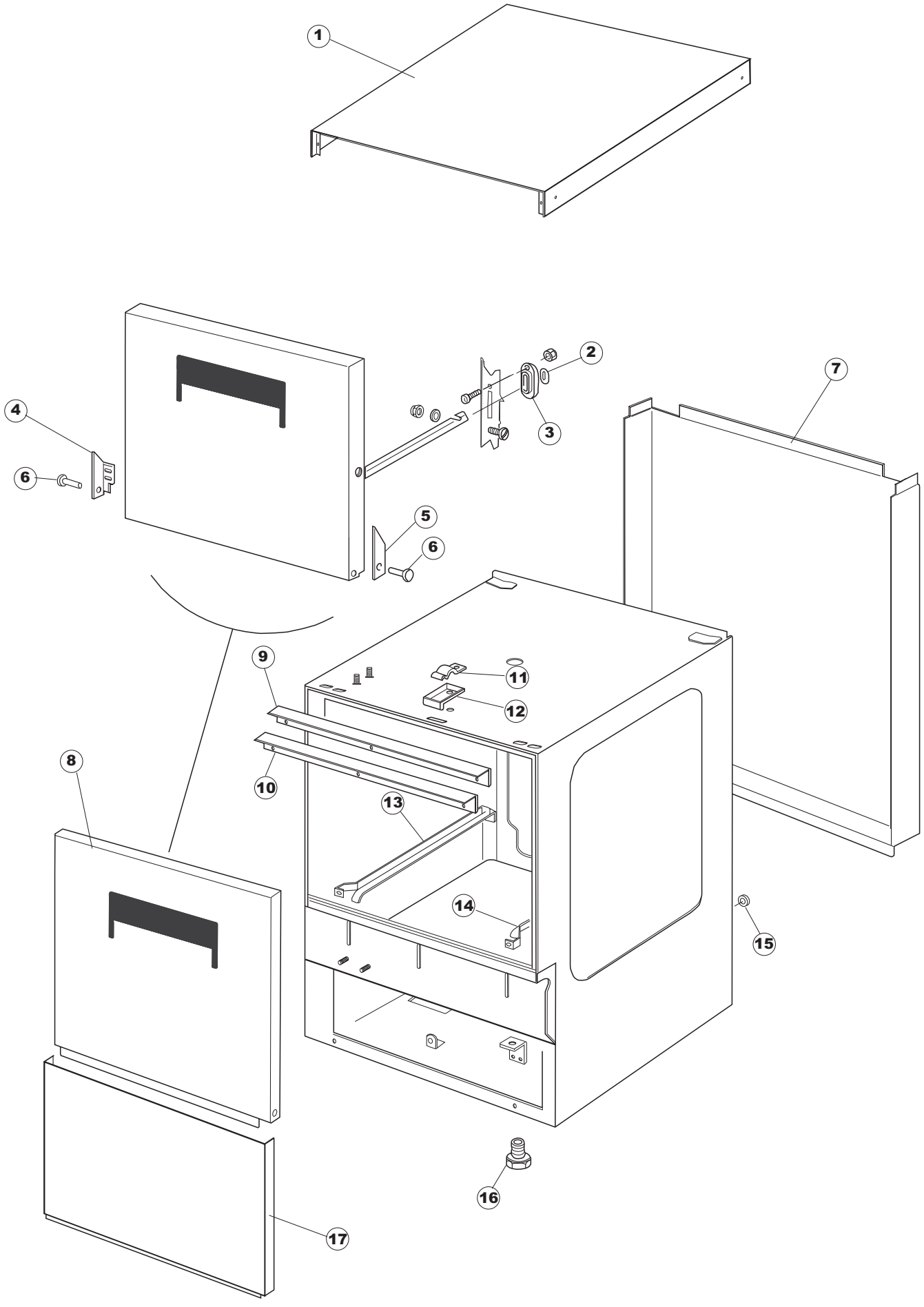
1
2
3
4
5
6
7
8
9
10
11
12
13
14
15
16
17

Pagina 1

1	004090	CAPPELLO G16/E40.TERZ. COVER G16/E40.TERZ. DECKEL G16/E40.TERZ. COUVERTURE G16/E40.TERZ. CAPERUZA G16/E40. TERZ.	
2	028078	PIASTR. BATTUTA PORTA 40/403 PLATE, DOOR LEDGE 40/403 PLATTE, TÜRANSCHLAG 40/403 PLAQUE FEUILLURE PORTE 40/403 PLANCHA TOPE PUERTA 40/403	
3	307005	BATTUTA ASTA PORTA - 40 DOOR-LEDGE, FOR ROD - 40 TÜRANSCHLAG, STANGE - 40 FEUILLURE BARRE PORTE - 40 TOPE VARA PUERTA - 40	
4	311009	CERNIERA PORTA SX.35/40 HINGE, DOOR LH 35/40 SCHARNIER, TÜR LINKS 35/40 CHARNIERE PORTE GAUCHE 35/40 BISAGRA PUERTA IZDA. 35/40	
5	311008	CERNIERA PORTA DX.35/40 HINGE, DOOR RH 35/40 SCHARNIER, TÜR RECHTS 35/40 CHARNIERE PORTE DROITE 35/40 BISAGRA PUERTA DCHA. 35/40	
6	325034	PERNO CERNIERA PORTA - 40 PIN, DOOR HINGE - 40 ZAPFEN, TÜRSCHARNIER - 40 PIVOT CHARNIERE PORTE - 40 PERNO BISAGRA PUERTA - 40	
7	022137	PANNELLO POSTERIORE E40 ALTA PIEG. PANEL, REAR E40 PLATTE, HINTEN E40 HOCH GEBOG. PANNEAU ARRIERE E40 PANEL TRASERO E40 ALTA PLEGADO	
8	029630	PORTA DOOR TUER PORTE PUERTA STEELTECH 340H CPL.	
9	437058	GUARNIZIONE PORTA - 40 GASKET, DOOR - 40 DICHTUNG, TÜR - 40 JOINT PORTE - 40 JUNTA PUERTA - 40	
10	033294	SQUADRA FISSA GUARNIZ.PORTA 40 BRACKET, FIXED FOR DOOR GASKET 40 WINKEL, FEST FÜR TÜRDICHTUNG 40 EQUERRE FIXE JOINT PORTE 40 ESCUADRA FIJA JUNTA PUERTA 40	
11	449036	MOLLA SERRATURA 11 SPRING, LOCK 11 FEDER, SCHLOSS 11 RESSORT SERRURE 11 MUELLE CERRADURA 11	
12	329012	LING. SERRATURA maggiorata 11 DOOR LOCK TAB overs. 11 KEIL, TÜRSCHLOSS grossdimens. 11 LANGUETTE SERRURE majoree 11 LENGÜETA CERRADURA aumentada 11	
13	015039	GUIDA CESTO SX.403/40 GUIDE, BASKET LH 403/40 FÜHRUNG, KORB LINKS 403/40 GUIDE PANIER GAUCHE 403/40 GUIA CESTA IZQDA. 403/40	
14	015038	GUIDA CESTO DX.403/40 GUIDE, BASKET RH 403/40 FÜHRUNG, KORB RECHTS 403/40 GUIDE PANIER DROITE 403/40 GUIA CESTA DCHA. 403/40	
15	459006	PASSACAVO Di9/De16 22 FAIRLEAD, Di9/De16 22 KABELDURCHGANG, Di9/De16 22 PASSE-CABLE Di9/De16 22 PASA-CABLE Di9/De16 22	

16	461010	PIEDINO ESAGONALE S621- FOOT, HEX. S621- STÜTZFUSS, SECHSK. S621- PIED HEXAGONAL S621- PATA HEXAGONAL S621-	
17	012188	FRONTALINO ESTERNO E40/403 FRONT PANEL, OUTER E40/403 FRONTTEIL, AUSS. E40/403 PANNEAU FRONTAL EXT. E40/403 PANEL FRONTAL EXTERNO E40/403	

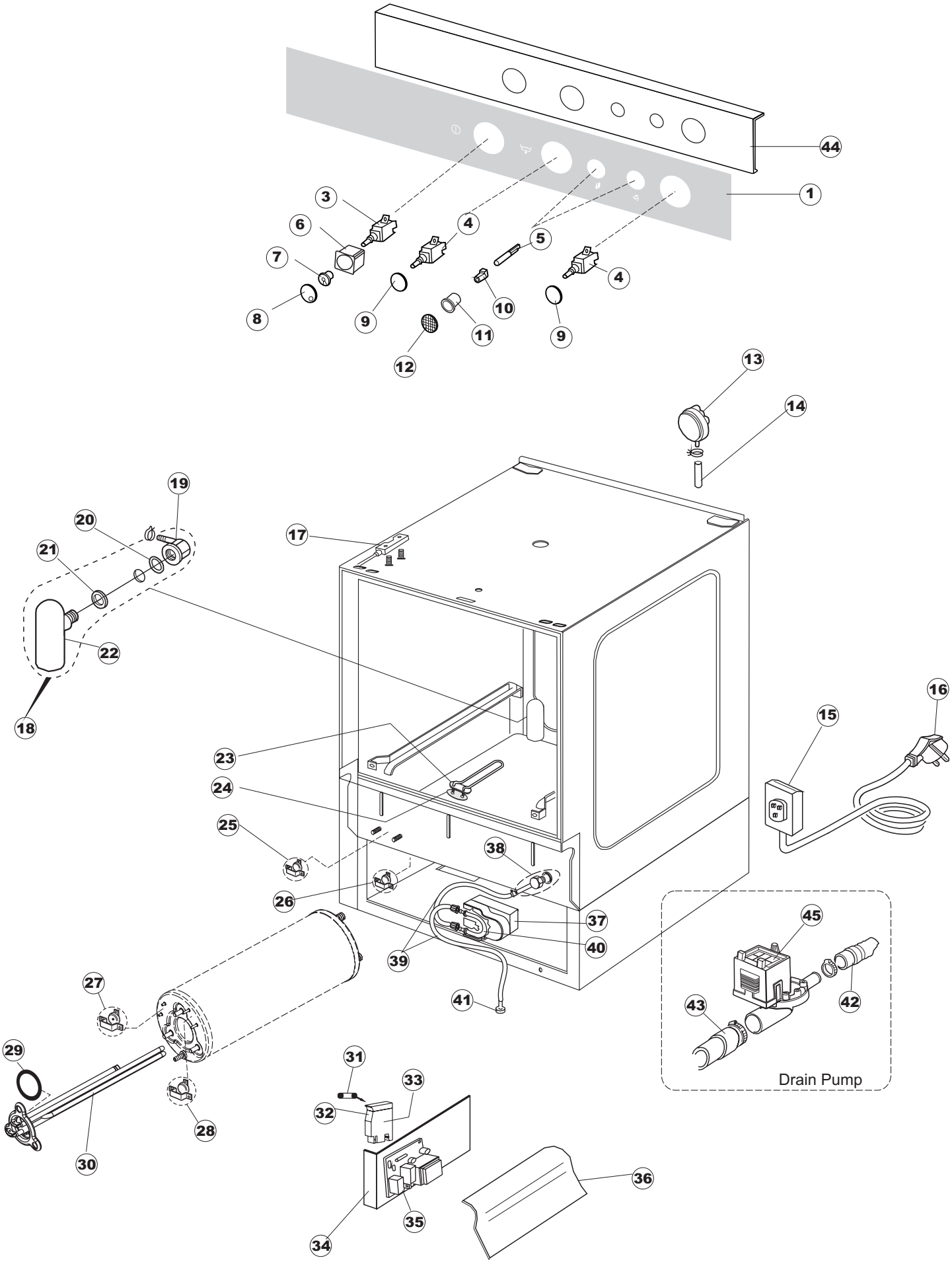
Drain Pump

Pagina 2

1	026291	POLIESTERE POLYESTERE POLYESTERE POLYESTER POLIESTER AF402	
3	208010	DEVIATORE DOPPIO - 35/40/50 SWITCH, DOUBLE - 35/40/50 ABLENKER, DOPPELT - 35/40/50 COMMUTATEUR DOUBLE - 35/40/50 DESVIADOR DOBLE - 35/40/50	
4	226071	PULSANTE DOPPIO CONTATTO 35/40/50 PB W/DOUBLE CONTACT 35/40/50 DRUCKT. MIT DOPPELKONTAKT 35/40/50 BP DUBLE CONTACT 35/40/50 PULSADOR DOBLE CONTACTO 35/40/50	
5	216006	LAMPADA SPIA BIANCA WARNING LAMP, WHITE KONTROLL-LAMPE, WEISS LAMPE-TEMOIN BLANCHE LAMPARA TESTIGO BLANCA	
6	226126	CORPO PULSANTE GRIGIO RAL7015(D25)) SWITCHCASE DRUCKTASTENGEHAEUSE CORPS DE BOUTON POUSSOIR CUERPO PULS.	
7	409003	CAMMA BICOLORE NERO.OFF/VERDE ON D25 TWO-COLOUR CAM, BLACK OFF/GREEN ON D25 ZWEIFARB. NOCKEN, SCHWARZ AUS/GRÜN EIN D25 CAME BICOLORE NOIR OFF/VERTE ON D25 EXCENTR. BICOLOR NEGRO. OFF/VERDE ON D25	
8	227065	TASTO GOFFRATO GRIGIO CON SPIA SER.D25 KEY, EMBOSS. GREY WITH PIL.LIGHT SER.D25 TASTE, GAUFR. GRAU MIT KONTROLL-LAMPE REIHE D25 TOUCHE REPOUSSE GRIS AVEC VOYANT SER.D25 TECLA GROFRADA GRIS CON TESTIGO SER. D25	
9	227064	TASTO GOFFRATO GRIGIO SERIE D25 KEY, EMBOSS. GREY SERIES D25 TASTE, GAUFR. GRAU REIHE D25 TOUCHE REPOUSSE GRIS SERIE D25 TECLA GROFRADA GRIS SERIE D25	
10	299035	SUPPORTO LAMPADA 35/40/50 SUPPORT, LAMP 35/40/50 LAMPENFASSUNG 35/40/50 SUPPORT LAMPE 35/40/50 SOPORTE LAMPARA 35/40/50	
11	226110	CORPO PULSANTE GOFFRATO GRIGIO D16 SWITCH HOLDER EMBOSSED GREY D16 SCHALTER GAUFRIERT GRAU D16 CORPS BP REPOUSSE GRIS D16 CUERPO PULSADOR GROFRADO GRIS D16	
12	207018	GEMMA PIANA ARANCIONE SERIE D16 INDICATOR LAMP, PLANE ORANGE, SERIES D16 ANZEIGER, EBEN, REIHE D16 VOYANT PLAT ORANGE SERIE D16 CAPERUZA PLANA NARANJA SERIE D16	
13	224004	PRESSOSTATO - 35/17 PRESSURE SWITCH - 35/17 DRUCKSCHALTER - 35/17 PRESSOSTAT - 35/17 PRESOSTATO - 35/17	
14	143013	TUBO PVC VERDE 4X7 PIPE, PVC GREEN 4X7 ROHR, PVC GRÜN 4X7 TUYAU PVC VERT 4X7 TUBO PVC VERDE 4X7	
15	459018	FISSACAVO ELECTRO TERMINAL KADO CABLE CLAMPS, ELECTRO TERMINAL KADO KABELKLIPPS, ELEKTRO-TERMINAL KADO FIXE-CABLE ELECTRO TERMINAL KADO SUJETA-CABLE ELECTRO TERMINAL KADO+TORNILL	
16	299040	SPINA SCHUKO 90^ CABL. l=2.5mt PLUG, SCHUKO 90^ CABL. l=2.5mt STECKER, SCHUKO 90^ VERKAB. l=2.5mt GOUPILLE SCHUKO 90^ CABL. l=2.5mt CLAVIJA SCHUKO 90^ CABL. l=2. 5mt	

17	80871	MICRO MAGNETICO MAGNETIC DOOR SWITCH TUERKONTAKTSCHALTER CONTACTE MAGNETIQUE CONTACTO MAGNETICO	
18	984005	GRUPPO CAMPANA PRESSOST.35/40 PRESSURE SWITCH BELL 35/40 GLOCKE, DRUCKSCHALTER 35/40 ENS.BOITE PRESSOSTAT 35/40 GRUPO CAMPANA PRESOSTATO 35/40	
19	468029	RACCORDO CAMPANA PRESSOSTATO UNION, PRESSURE SWITCH BELL VERBINDUNGSST., DRUCKSCHALTERGLOCKE RACCORD BOITE PRESSOSTAT EMPALME CAMPANA PRESOSTATO	
20	456020	OR 3050 R495 O-ring 3050 R495 O-Ring 3050 R495 OR 3050 R495 OR 3050 R495	
21	437019	GUARNIZIONE CAMP. PRESS. V.M. GASKET, CAMP. PRESS. V.M. DICHTUNG, GLOCKE DRUCKSCH. V.M. JOINT BOITE PRESSOSTAT V.M. JUNTA CAMP. PRES. TORNILLO M.	
22	107005	CAMPANA PRESS. EB 35/40 PRESSURE SWITCH BELL EB 35/40 GLOCKE, DRUCKSCHALT. EB 35/40 BOITE PRESSOSTAT EB 35/40 CAMPANA PRES. EB 35/40	
23	230098	RESISTENZA VASCA 600W/230V RESISTANCE, TANK 600W/230V WIDERSTAND, TANK 600W/230V RESISTANCE CUVE 600W/230V RESISTENCIA CUBETA 600W/230V	
24	437086	GUARNIZIONE RESISTENZA VASCA GASKET, TANK RESISTANCE DICHTUNG, TANKWIDERSTAND JOINT RESISTANCE CUVE JUNTA RESISTENCIA CUBETA	
25	236035	TERM.CONTATTO VASCA/L.60ø+/-3ø(2611573) THERM.,CONT. TANK/L.60ø+/-3ø(2611573) THERM.,KONT. TANK/L.60ø+/-3ø(2611573) THERM.CONTACT CUVE/L.60ø+/-3ø(2611573) TERM.CONTACTO CUBETA/L.60°+/-3°(2611573)	
26	236047	TERM.CONTATTO VASCA/S.95ø+/-3ø THERM.,CONT. TANK/S.95ø+/-3ø THERM.,KONT. TANK/S.95ø+/-3ø THERM.CONTACT CUVE/S.95ø+/-3ø TERM.CONTACTO CUBETA/S.95°+/-3° SIC.	
27	236039	TERM-CONTATTO BOILER/S-110ø+/-5ø THERM.,CONT. BOILER/S-110ø+/-5ø THERM.,KONT. BOILER/S-110ø+/-5ø THERM-CONTACT CHAUDIERE/S-110ø+/-5ø TERM-CONTACTO CALENTADOR/S-110º+/-5º	
28	236048	TERM.CONTATTO BOILER/L.80ø+/-3ø(2611354) THERM.,CONT. BOILER/L.80ø+/-3ø(2611354) THERM.,KONT. BOILER/L.80ø+/-3ø(2611354) THERM.CONTACT CHAUDIERE/L.80ø+/-3ø(2611354) TERM.CONTACTO CALENT./L.80°+/-3°(2611354)	
29	456075	OR 37,47X5,33 NBR OR 37,47X5,33 NBR TORISCHE DICHTUNG 37,47X5,33 NBR JOINT TORIQUE 37,47X5,33 NBR OR 37,47X5,33 NBR	
30	230113	RESIST.B.2600W/230V FL.PICCOLA P/BULBO HEATING ELEMENT 2600W/230V FL.PICCOLA P/BULBO HEIZUNG 2600W/230V FL.PICCOLA P/BULBO RESISTANCE 2600W/230V FL.PICCOLA P/BULBO RESIST.B.2600W/230V FL.PEQUEÑA P/AMPOLLA	
31	228010	FUSIBILE 5X20 4A FAST FUSE SICHERUNG FUSIBLE FUSIBLE 5X20 T4A RETARDADO 250V	

32	210010	PORTAFUSIBILE UL FUSE-HODER SICHERUNGSHALTER PORTE-FUSIBLE PORTAFUSIBLE UL	
33	210011	PIASTRINA TERMINALE SFR/PT CABUR PLATE PLAETTCHEN PLAQUETTE PLACA TERMINAL SFR/PT CABUR	
34	035045	STAFFA COMP. ELETTRICI E.35/40 BRACKET, BRACKET, E.35/40 BÜGEL, EL.KOMP. E.35/40 ETRIER COMP. ELECTRIQUES E.35/40 SOPORTE COMP. ELECTRICOS E. 35/40	
35	215029	SCHEDA IGEA CONTROLLO ELT.LA50 IBRIDA MAIN BOARD KARTE CARTE ELECTRONIQUE TARJETA IGEA CONTROL ELT.LA50 IBRIDA	
36	214077	PROTEZIONE ELETTR.TRASP. 44 EL.PROTECTION,TRANSP. 44 EL.SCHUTZ,TRANSP. 44 PROTECTION ELECTR.TRANSP. 44 PROTECCION ELECTR. TRANSP. 44	
37	209029	DOSAT.PERIST.DETERGENTE P/REGOLABILE DOSIFIC.PERIST.DETERGENTE P/REGULABLE	Optional
38	468151	RACCORDO ENTRATA SAPONE CPL NM * SALDATO UNION, EXTRA DET. CPL NM * WELDED VERBINDUNGSST., SEIFENEINTRITT CPL NM * GESCHW. RACCORD ENTREE SAVON CPL NM * SOUDE EMPALME ENTRADA JABON CPL NM * SOLDADO	
39	143194	TUBO 4x6 CRISTAL TRASPARENTE PIPE 4x6 CRISTAL, TRANSP. ROHR 4x6 CRISTAL, DURCHS. TUYAU 4x6 CRISTAL TRANSPARENT TUBO 4x6 CRISTAL TRASPARENTE	
40	143258	TUBETTO 6X10 TUBE 6X10 FLASCHEN 6X10 TUBE 6X10 TUBITO SANTOPRENE 6X10 EMPALMES+VIROLAS	
41	121143	FILTRO PER POMPA DETERSIVO DETERGENT PUMP FILTER (S6754) SIEB FUER SPUELMITTELPUMPE FILTRE POUR POMPE DETERGENT FILTRO INOX PORTAGOMA 4X6	
42	143137	TUBO SCARICO D18 TERM.LE CURVO PIPE, DRAIN D18 BENT TERM. ABLASSROHR D18 GEBOG. ENDE TUYAU VIDANGE D18 TERMINAL COURB TUBO DESCARGA D18 TERMINAL CURVO	
43	127054	MANICOTTO POMPA SCARICO E35/40 SLEEVE, DRAIN PUMP E35/40 MUFFE, ABLASSPUMPE E35/40 MANCHON POMPE VIDANGE E35/40 MANGUITO BOMBA DESCARGA E35/40	
44	025589	PANNELLO COMANDI POLYESTERE POLYESTERE POLYESTERE PANEL DE MANDOS EW403 NEW	
45	130123	POMPA SCARICO (450/D18/VICT.12/32) DRAIN PUMP (450/D18/VICT.12/32) ABLASSPUMPE (450/D18/VICT.12/32) POMPE VIDANGE (450/D18/VICT.12/32) BOMBA DESCARGA (450/D18/VICT. 12/32)	Optional

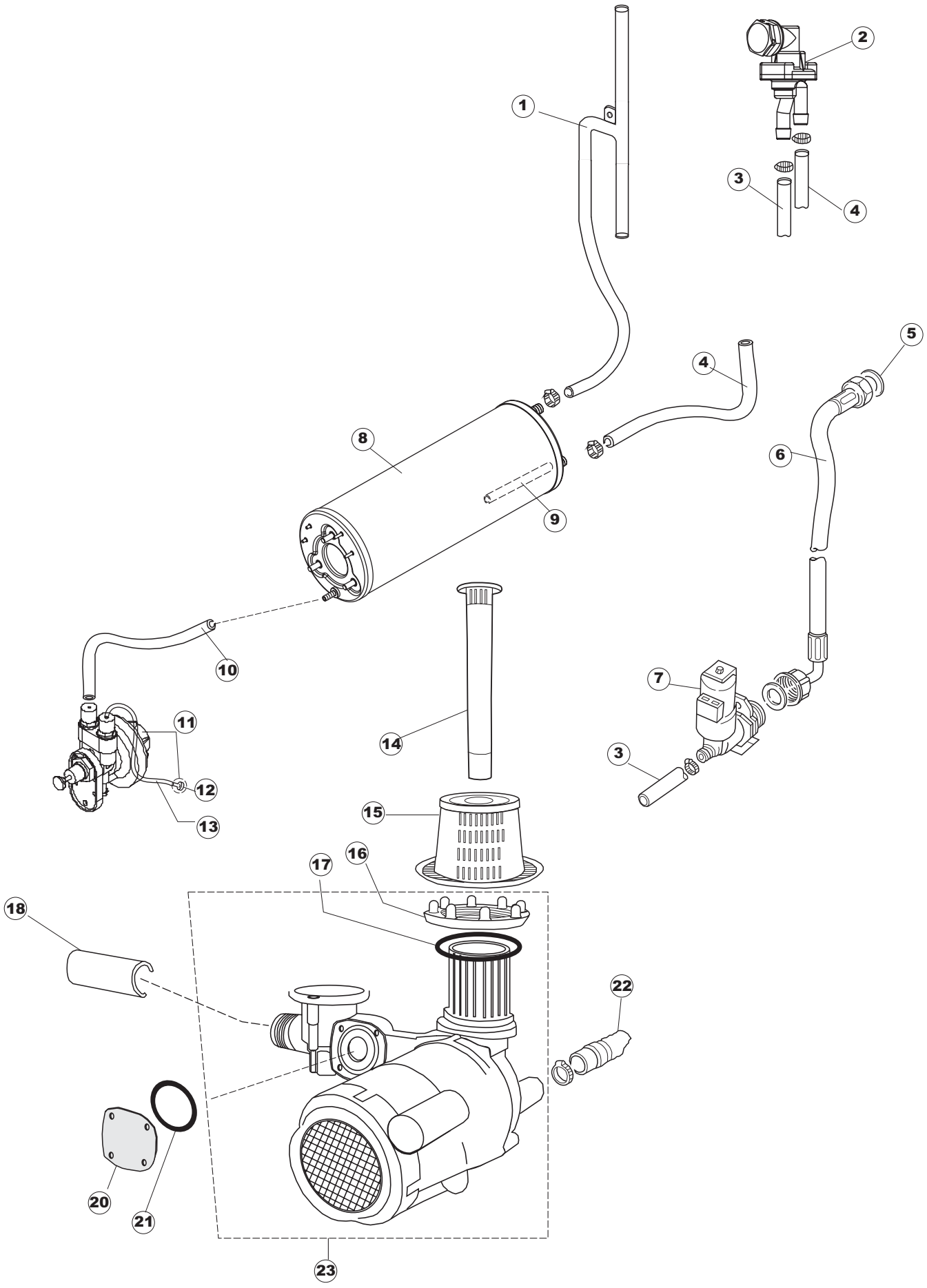
1
2
3
4
4
5
6
8
9
10
11
12
13
14
15
16
17
18
20
21
22
23
7
3

1	143239	TUBO CONDOTTA GIUNZIONE H-)COND.INF. PIPE, H-)COND.LOW. LEITUNG, H-)UNT.COND. TUYAU CONDUITE JONCTION H-)COND.INF. TUBO CONDUCTO UNION H-)COND. INF.	
2	144010	DISPOSIT.A/R.(EB) CON RACCORDO SFIATO CHECK VALVE (EB) W/DRAIN UNION RÜCKSCHLAGVORR.(EB) MIT ENTLÜFTUNG DISPOSIT.A/R.(EB) AVEC RACCORD DE VIDANGE DISPOSIT. A/R. (EB) CON EMPALME ALIVIAD.	
3	143236	TUBO CONDOTTA VALVOLA-)DVGW PIPE, -)DVGW LEITUNG, -)DVGW TUYAU CONDUITE SOUPAPE-)DVGW TUBO CONDUCTO VALVULA-)DVGW	
4	143237	TUBO CONDOTTA DVGW-)BOILER PIPE, DVGW-)BOILER LEITUNG, DVGW-)BOILER TUYAU CONDUITE DVGW-)CHAUDIERE TUBO CONDUCTO DVGW-)CALENTADOR	
5	437041	GUARNIZIONE 3/4 GAS CARICO GASKET 3/4 GAS LOAD DICHTUNG 3/4 GASVERSORG. JOINT 3/4 GAZ VID. JUNTA 3/4 GAS CARGA	
6	929169	TUBO DI CARICO DEL TERMOPLASTICO PIPE, THERMOPLASTIC DELIVERY ROHR, EINLASS THERMOPLAST TUYAU DE CHARG. DU THERMOPLASTIQUE TUBO DE CARGA DEL TERMOPLASTICO	
7	240011	VALVOLA DI CARICO 1VIA LOADING S.VALVE 1-WAY ZUFLUSSVENTIL 1-WEG SOUPAPE DE CHARG. 1VOIE VALVULA DE CARGA 1VIA	
8	104056	BOILER E35/40 RESISTENZA FLANGIATA BOILER E35/40 RESISTENZA FLANGIATA WARMWASSERBEREITER BOILER CALENTADOR E35/40 RESISTENCIA EMBRIDADA	
9	143228	TUBO ENTRATA ACQUA BOILER 8X9XL250 PIPE, BOILER WATER INLET 8X9XL250 ROHR, BOILERWASSEREINLASS 8X9XL250 TUYAU ENTREE EAU CHAUDIERE 8X9XL250 TUBO ENTRADA AGUA CALENTADOR 8X9XL250	
10	143005	TUBO PRESS.TP 5x11 (CASER/15/NL C4N) PIPE, PRESSURE SWITCH TP 5x11 (CASER/15/NL C4N) ROHR, DRUCKSCHALTER TP 5x11 (CASER/15/NL C4N) TUYAU PRESS.TP 5x11 (CASER/15/NL C4N) TUBO PRES. TP 5x11 (CASER/15/NL C4N)	
11	209025	DOSATORE BRILLANTANTE RINSE AID DISPENSING PUMP DOSIERPUMPE KLARSPUELER POMPE DOSEUR PR.RINÇAGE BOMBA DOSIFICADOR ABRILL.(BP)DIB0805E	
12	121017	FILTRO ASPIRAZ. BRILLANTANTE FILTER, RINSE-AID SUCT. FILTER, ABSAUG. KLARSPÜLER FILTRE ASPIRATION TENSIOACTIF FILTRO ASPIRAC. ABRILLANTADOR	
13	H.775601	TUBO 4x6 CRISTAL BLUE PVC PIPE 4x6 CRISTAL BLUE PVC ROHR 4x6 CRISTAL BLAU PVC TUYAU 4x6 CRISTAL BLEU PVC TUBO 4x6 CRISTAL AZUL PVC	
14	142051	TROPPO PIENO E.35/40 OVERFLOW E.35/40 ÜBERLAUF E.35/40 TROP-PLEIN E.35/40 REBOSE E. 35/40	
15	121144	FILTRO ASPIRAZIONE POMPA LAVABICCHIERI PUMP ASPIRATION FILTER FOR GLASSWASHERS ABSAUG SIEB DER PUMPE FUER GLAESERSPUELE R FILTRE ASPIRATION POMPE LAVE-VERRES FILTRO ASP. BOMBA E. 35/40	

16	429065	GHIERA SCARICO E.35/40 RING NUT, DRAIN E.35/40 GEWINDERING, ABLAUF E.35/40 BAGUE VIDANGE E.35/40 VIROLA DESCARGA E. 35/40	
17	437079	GUARNIZIONE CORPO INFER.E35/40 GASKET, LOWER SHELL E35/40 DICHTUNG, UNT.GEHAUSE E35/40 JOINT CORPS INF.E35/40 JUNTA CUERPO INFER. E35/40	
18	127053	MANICOTTO MANDATA SUPERIORE E.40 SLEEVE, UPP. DELIVERY E.40 MUFFE, OB. VERSORGUNG E.40 MANCHON REFOUL. SUP. E.40 MANGUITO IMPULSION SUPERIOR E. 40	
20	480087	TAPPO CORPO GRUPPO INFER. CAP, LOWER BODY ASSB. PFROPFEN, GEHAUSE UNT.GRUPPE BOUCHON CORPS ENSEMBLE INFER. TAPON CUERPO GRUPO INFER.	
21	437078	GUARNIZIONE DOSAT.E35/.RISC.SUP. GASKET, DISPENSER E35/.UPP.RINSE DICHTUNG, DOSIERER E35/.OB.NACHSPÜLEN JOINT DOSEUR E35/.RINC.SUP. JUNTA DOSIFIC. E35/. ENJUAGUE SUP.	
22	143120	TUBO SCARICO Mt1.5 / D25 PIPE, DRAIN Mt1.5 / D25 ABLASSROHR, Mt1.5 / D25 TUYAU VIDANGE Mt1.5 / D25 TUBO DESCARGA Mt1. 5 / D25	
23	999135	GRUPPO CORPO LAVAGGIO+POMPA E40 WASH.-ARM ASSB.+PUMP E40 SATZ, SPÜLARM+PUMPE E40 ENS. CORPS LAVAGE+POMPE E40 GRUPO CUERPO LAVADO+BOMBA E40	

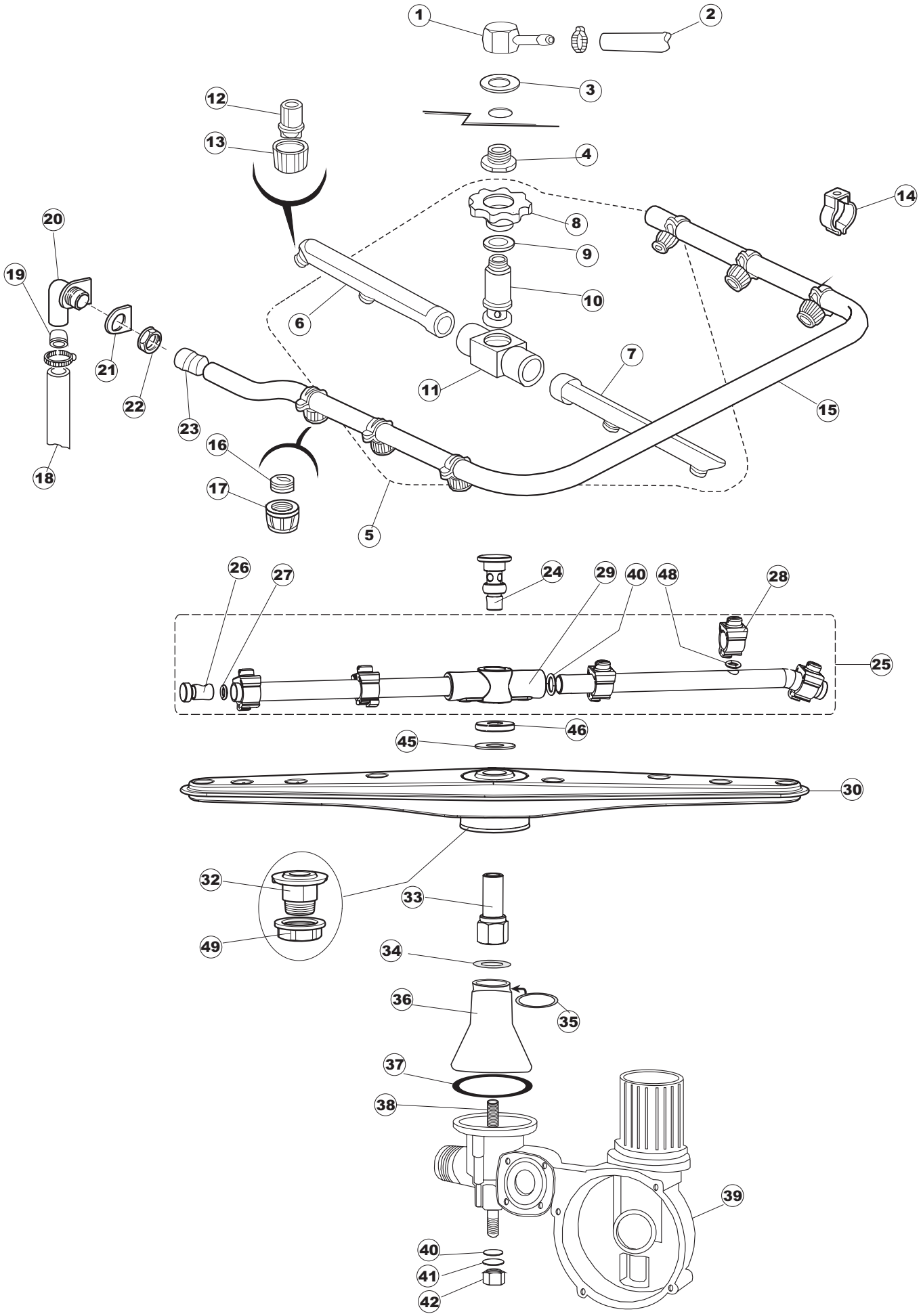
1
2
3
12
13
4
14
20
8
19
9
10
6
7
21
22
11
15
23
16
17
18
5
26
27
24
29
40
48
28
25
46
45
30
32
33
49
34
36
35
37
38
39
40
41
42

1	468165	PIPA RACCORDO PLASTICA 35/40/22 LUG, PLASTIC UNION 35/40/22 FITTING, KUNST. VERBINDUNGSST. 35/40/22 TUBE RACCORD PLAST.35/40/22 PIPA EMPALME PLASTICO 35/40/22	
2	143239	TUBO CONDOTTA GIUNZIONE H-)COND.INF. PIPE, H-)COND.LOW. LEITUNG, H-)UNT.COND. TUYAU CONDUITE JONCTION H-)COND.INF. TUBO CONDUCTO UNION H-)COND. INF.	
3	437078	GUARNIZIONE DOSAT.E35/.RISC.SUP. GASKET, DISPENSER E35/.UPP.RINSE DICHTUNG, DOSIERER E35/.OB.NACHSPÜLEN JOINT DOSEUR E35/.RINC.SUP. JUNTA DOSIFIC. E35/. ENJUAGUE SUP.	
4	429050	GHIERA FISSAGGIO PIPA RACC. 35 RING NUT, UNION PIPE FIX. 35 KLEMMRING FÜR FITTING 35 BAGUE FIXATION TUYAU RACC. 35 VIROLA FIJACION PIPA RECOGIDA 35	
5	993031	GRUPPO RISC.SUP.4 SPRUZZI S621 RINSE-ARM ASSB., UPP.4 SPRAYS S621 SATZ, NACHSPÜLARM OB.4 SPRITZD. S621 ENS. RINC.SUP.4 JETS S621 GRUPO ENJUAGUE SOP. 4 CHORROS S621	
6	106035	BRACCIO RISC. SX GRIGIO S621 RINSE ARM, LH GREY S621 NACHSPÜLARM, LINKS GRAU S621 BRAS RINC. GAUCHE GRIS S621 BRAZO ENJUAGUE IZDA GRIS S621	
7	106036	BRACCIO RISC. DX GRIGIO S621 RINSE ARM, RH GREY S621 NACHSPÜLARM, RECHTS GRAU S621 BRAS RINC., DROITE GRIS S621 BRAZO ENJUAGUE DCHA GRIS S621	
8	429008	GHIERA GUIDA E FISSA RISC.S621 RING NUT, GUIDE AND RINSE FIX.S621 GEWINDERING, FÜHRUNG UND BEF. NACHSPÜLEN S621 BAGUE GUIDE ET FIXE RINC.S621 VIROLA GUIA Y FIJA ENJUAGUE S621	
9	437008	GUARNIZIONE RISCIACQ.SUPERIORE GASKET, UPPER RINSE DICHTUNG, OB. NACHSPÜLEN JOINT RINCAGE SUPERIEUR JUNTA ENJUAGUE SUPERIOR	
10	325001	PERNO PETTINE RISCIACQUO 21/31 PIN, RINSE COMB 21/31 ZAPFEN, NACHSPÜLKAMM 21/31 PIVOT PEIGNE RINCAGE 21/31 PERNO PEINE ENJUAGUE 21/31	
11	129002	CORPO PETTINE RISC.SUP. S621 RINSE-ARM SUPPORT COMB, UPPER S621 GEHAUSE, NACHSPÜLKAMM, OBEN S621 CORPS PEIGNE RINC.SUP. S621 CUERPO PEINE ENJUAGUE SOP. S621	
12	140007	SPRUZZO RISCIACQUO S621-3-31- SPRAY S621-3-31- SPRITZ S621-3-31- JET RINCAGE S621-3-31- ROCIADOR ENJUAGUE S621-3-31-	
13	429006	GHIERA RISCIACQUO S621-3-31-3 RING NUT, RINSE S621-3-31-3 GEWINDERING, NACHSPÜLEN S621-3-31-3 BAGUE RINCAGE S621-3-31-3 VIROLA ENJUAGUE S621-3-31-3	
14	449045	MOLLETTA FISSA LAVAGGIO SUP. SPRING, FIX, UPP.WASH. FEDER, FEST OB.SPÜL. RESSORT FIXE LAVAGE SUP. RESORTE FIJA LAVADO SOP.	
15	129053	PETTINE LAV.SUP.PLASTICA E.40 CPL. COMB, UPP.WASH., PLASTIC E.40 CPL. KAMM, OB.SPÜL., KUNST. E.40 CPL. PEIGNE LAV.SUP.PLASTIQUE E.40 CPL. PEINE LAV. SUP. PLASTICO E. 40 CPL.	

16	119003	ELICA FILETTATA LAVAGGIO THREADED IMPELLER, WASHING FLÜGELRAD MIT GEWINDE, SPÜLEN HELICE FILETEE LAVAGE HELICE FILETEADA LAVADO	
17	140010	SPRUZZO LAVAGGIO SUP. S621-3- SPRAY, UPP. S621-3- SPRITZ, OB. S621-3- JET LAVAGE SUP. S621-3- ROCIADOR LAVADO SOP. S621-3-	
18	127053	MANICOTTO MANDATA SUPERIORE E.40 SLEEVE, UPP. DELIVERY E.40 MUFFE, OB. VERSORGUNG E.40 MANCHON REFOUL. SUP. E.40 MANGUITO IMPULSION SUPERIOR E. 40	
19	199051	INSERTO PARZ.ACQUA SUP.PLAST.E40 INSERT FOR UPPER PLAST.WATER E40 EINSATZ FÜR OB. WASSERDROSS. KUNST. E40 INSERT POUR ETRANGL. EAU SUP.PLAST.E40 ELEMENTO PARC. AGUA SOP. PLAST. E40	
20	111026	COLLETTORE SUP.LAVAGGIO E.40 MANIFOLD, UPPER WASHING E.40 SAMMELLEITUNG, OBEN SPÜLEN E.40 COLLECTEUR SUP.LAVAGE E.40 COLECTOR SUP. LAVADO E. 40	
21	437080	GUARNIZIONE RACCORDO LAV.SUP.E.40 GASKET, UNION, UPP.WASH.E.40 DICHTUNG, VERBINDUNGSST., OB.SPÜL.E.40 JOINT RACCORD LAV.SUP.E.40 JUNTA EMPALME LAV. SUP. E. 40	
22	417038	DADO FISSA COLLETTORE LAVAGGIO NUT, TO FIX WASH.MANIFOLD SCHRAUBENMUTTER, BEF. SPÜL.SAMMELLEITUNG ECROU FIX.COLLECTEUR DE LAVAGE TUERCA FIJA COLECTOR LAVADO	
23	441010	INSERTO TENUTA D18 COLL.S621- INSERT, SEAL D18 COLL.S621- EINSATZ, DICHT. D18 SAMM.S621- INSERT ETANCHEITE D18 COLL.S621- ELEMENTO ESTANQ. D18 COLECT. S621-	
24	80700	PERNO RISCIACQUO PERNO	
25	80956	GRUPPO DI RISCIACQUO LOWER RINSE-UNIT FOR GLASSWASHERS NACHSPUELEINHEIT-FUER GLAESER- SPUELER GROUPE DE RINCAGE POUR LAVE- VERRES GRUPO ENJUAGUE INF.40 STEEL INOX	
26	926132	TAPPO PL.X BRACCIO DI RISC.(DWT312) CAP, PLASTIC FOR WASH. ARM (DWT312) PFROPFEN, KUNST. FÜR NACHSPÜLARM (DWT312) BOUCHON PL.POUR BRAS DE RINC.(DWT312) TAPON PL. X BRAZO DE ENJUAGUE (DWT312)	
27	456060	OR 2025(CGR2025) O-ring 2025(CGR2025) O-Ring 2025(CGR2025) OR 2025(CGR2025) OR 2025(CGR2025)	
28	140025	SPRUZZO RISCIACQUO D.2,5 SPRAY D.2,5 SPRITZ D.2,5 JET RINCAGE D.2,5 ROCIADOR ENJUAGUE D. 2,5	
29	69632	CORPO PETTINE BASSO DI GAMMA ARM BODY KOERPER DES NACHSPUELARMES CORPS BRAS CUERPO PEINE ENJUAGUE.	
30	990121	GR.PETTINE LAVAGGIO LA40 NEW WASH BOSS ASSEMBLY SPUELARM KOMPL. GROUPE RAMPE LAVAGE GR.PEINE LAVADO LA40	

32	417129	BUSSOLA PETTINE LAV.LA40 UNION NUT WASH OBERE SPUELROHRBEFESTIGUNG	
33	325102	PERNO LAVAGGIO PERNO LAVAD	
34	199052	DISCO PARZIAL.ACQUA E35/40 N.CORPETTO DISC, WATER FLOW REDUCER E35/40 DROSSELSCHEIBE, WASSER E35/40 DISQUE ETRANGL. EAU E35/40 DISCO PARCIAL. AGUA E35/40 N. CORPETTO	
35	303018	ANELLO DI TENUTA E SCORR.CL.3 RING, SEAL AND SLIDING CL.3 DICHTUNGS- UND GLEITRING CL.3 BAGUE D'ETANCHEITE ET GLISSEM.CL.3 ANILLO DE ESTANQ. E CORRED. CL. 3	
36	115110	CONDOTTO CENTRALE E.35/40 NM CENTR.PIPELINE - E.35/40 NM ZENTR.LEITUNG - E.35/40 NM CONDUITE CENTR. E.35/40 NM CONDUCTO CENTRAL E. 35/40 NM	
37	456061	OR 153 O-ring 153 O-Ring 153 OR 153 OR 153	
38	478056	SUPPORTO PERNO PETTINE E.35/40 SUPPORT, COMB PIN E.35/40 HALTER, KAMMZAPFEN E.35/40 SUPPORT PIVOT PEIGNE E.35/40 SOPORTE PERNO PEINE E. 35/40	
39	111023	CORPO INF.E35/40 LOWER ASSB. E35/40 UNT. EINHEIT E35/40 CORPS INF.E35/40 CUERPO INF. E35/40	
40	456019	OR 2037 O-ring 2037 O-Ring 2037 OR 2037 OR 2037	
41	456006	OR 3043 O-ring 3043 O-Ring 3043 OR 3043 OR 3043	
42	417104	DADO OT. E.35 NUT, BRASS E.35 SCHRAUBENMUTTER, MESSING E.35 ECROU LAITON E.35 TUERCA LAT. E. 35	
45	80623	ANELLO IN TEFLON 22X9,5X1 RING 22X9,5X1 RING 22X9,5X1 RING 22X9,5X1 ANILLO DE TEFLON 22X9,5X1	
46	80697	GHIERA ULTRA RINSE INOX NUT RING BAGUE VIROLA ULTRA RINSE INOX	
48	456072	OR 6X2 NBR70 O-RING 6X2 O-RING 6X2 O'RING 6X2 NBR70 OR 6X2 NBR70	
49	308031	GHIERA BUSSOLA LAVAGGIO X5 RING NUT, WASH.BUSH X5 GEWINDERING, SPÜL.BUCHSE X5 BAGUE DOUILLE LAVAGE X5 VIROLA CASQUILLO LAVADO X5	

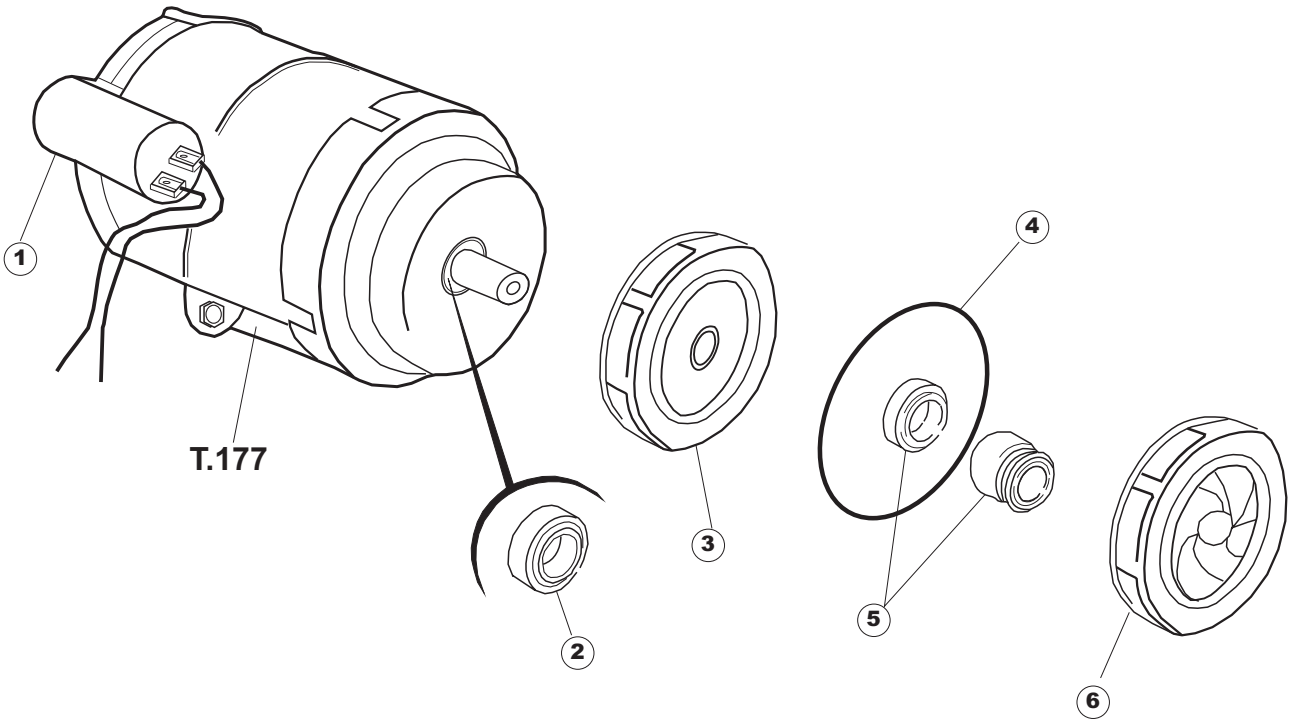
1
T.177
2
3
4
5
6

Pagina 5

1	206009	CONDENSATORE DA 6.3 mF T172 CONDENSER - 6.3 mF T172 KONDENSATOR - 6.3 mF T172 CONDENSATEUR DE 6.3 mF T172 CONDENSADOR DE 6. 3 mF T172	
2	314009	CUSCINETTO 608/ZZ T171.172 BEARING 608/ZZ T171.172 LAGER 608/ZZ T171.172 PALIER 608/ZZ T171.172 COJINETE 608/ZZ T171. 172	
3	315024	FLANGIA E35/40 T176-177 W180/210 FLANGE, E35/40 T176-177 W180/210 FLANSCH, E35/40 T176-177 W180/210 BRIDE E35/40 T176-177 W180/210 BRIDA E35/40 T176-177 W180/210	
4	456074	GUARNIZIONE O-RING PER POMPA DI LAVAGGIO PER LAVABIC O-RING PACKING FOR WASH-PUMP FOR GLASS- WASHERS DICHTUNG 0-RING FUER WASCHPUMPE FUER GLAESERSPUE JOINT O-RING POUR POMPE DE LAVAGE POUR LAVE-VERRES OR 82.27X1.78 METRICO(2325)BOMBA 35/40	
5	141007	TENUTA MECC.D.26x13x5,5 BR. SEAL, MECH..D.26x13x5,5 BR. DICHTUNG, MECH.D.26x13x5,5 BR. JOINT MECAN.D.26x13x5,5 BR. SELLO MEC. D. 26x13x5,5 BR.	
6	124049	GIRANTE POMPA D71.5 E40 T177 PUMP IMPELLER D71.5 E40 T177 LAUFRAD, PUMPE D71.5 E40 T177 ROUE POMPE D71.5 E40 T177 ROTOR BOMBA D71. 5 E40 T177	