SMEG thanks you for choosing one of its products.

Read all the instructions in this manual carefully to become familiar with the right conditions for the proper use of your dishwasher.

	This manual is an integral part of the dishwasher and must always be kept intact together with the appliance. Before using the appliance, please read this manual throughout. Installation must be done by qualified staff in compliance with the relevant regulations. The appliance is intended for professional use, and complies with Directives 2006/95 EC and 2004/108 EC, including the prevention and elimination of RF disturbance. The appliance is built to provide the following function: Washing and drying dishes; all other uses are to be considered improper. The manufacturer declines all liability for uses other than those stated above.

1 PRODUCT IDENTIFICATION AND SAFETY AND OPERATING WARNINGS

1.1 Brand and model (or type)

Professional dishwasher
Brand: Smeg
Model: SW260/262

1.2 Edition (revision) of user manual

19 390 5043 02	02/04/2015
Rev. of manual	Date

1.3 Name and address of manufacturer/distributor

Smeg S.p.A.

Via Leonardo da Vinci, 4 - 42016 Guastalla (RE) Tel. +39 0522 8211 - Fax + 39 0522 821453 website: www.smegfoodservice.com, email : foodservice@smeg.it

Info :
INFORMATION AND SERVICE FOR SMEG PROFESSIONAL DISHWASHER PRODUCTS
Our Sales Department staff will be able to provide you with information about prices and special offers.
Our After-Sales Department will be able to provide you with guidance about keeping your appliance functioning correctly and put you in touch with your nearest authorised Service Centre. Our entire product offering can be viewed at the above website.

1.4 Declaration of conformity to product standards

This appliance is marked in compliance with European Directive 2002/96/EC on waste electrical and electronic equipment (WEEE). Make sure that this product is scrapped correctly to safeguard the environment and health. Decommission the appliance in compliance with local waste management regulations. For further information on the treatment, recovery and recycling of this product, contact the local authority, domestic waste collection service, or your Smeg reseller. The appliance must be connected to earth in compliance with electrical safety (CEI-EN-IEC 60335-2-58/61770) and electromagnetic compatibility regulations (CEI-IEC-EN 55014-1/-2, 61000-3;4, 50366). The manufacturer is not liable for any injury or damage cause by failure to comply with the instruction given in this manual, improper use, tampering with even a single part of the appliance, or the use of non-original spare parts.

2 PRODUCT CHARACTERISTICS

2.1 Application, general functions and intended use

Dishwasher intended exclusively for professional use, must be used by authorised and trained staff.
Designed for washing tableware (plates, cups, bowls, oven dishes and cutlery) and similar catering items, and complies with international electrical and mechanical safety codes.

Certain models may operate at very high temperature for heat disinfection, but MAY NOT be used for medical sterilisation purposes.

2.2 Dimensions, weight and handling instructions - Dimensions in mm.

INSTALLATION AND POSITIONING

Bring the dishwasher to the installation site, remove the packaging and check the appliance and components for damage; any damage found must be reported to the transporter in writing.
Disposal instructions for the packaging materials are given elsewhere in this manual.
When the product is decommissioned it must not be dumped in the environment; it must be disposed of in accordance with the established regulations. All metal parts are in stainless steel and can be removed. The plastic parts are marked with a symbol identifying the material used, as applicable.

WARNING

Any adjustments, maintenance, etc. must be done with the appliance disconnected from its power supply.
The appliance may be ordered with a build-in top, if necessary. The product is 30 mm lower than indicated.
The appliance weighs from 65 to 75 kg, depending on the version and options.

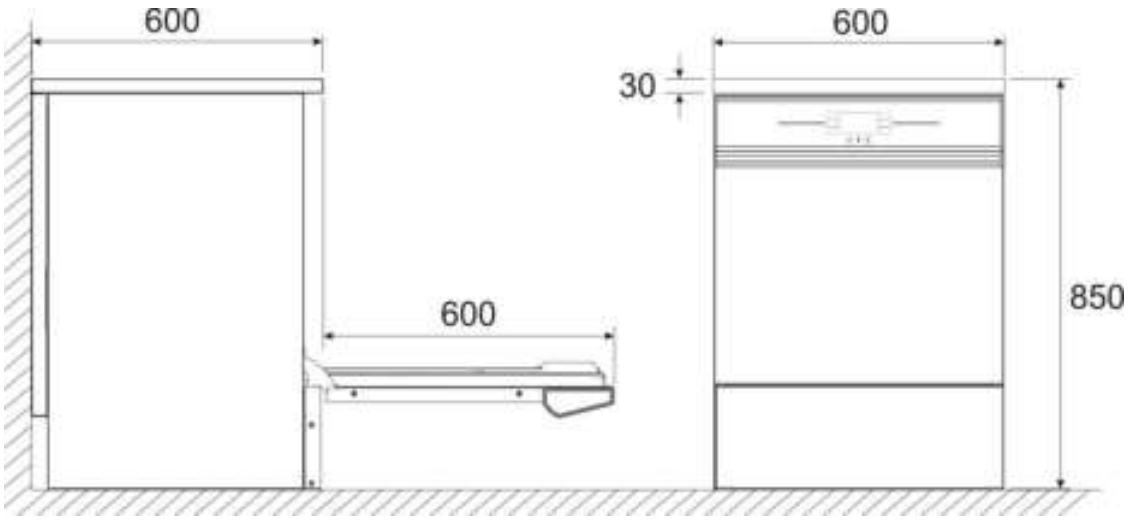

fig. 1 – Diagram, overall dimensions and clearances

BUILD-UNDER INSTALLATION

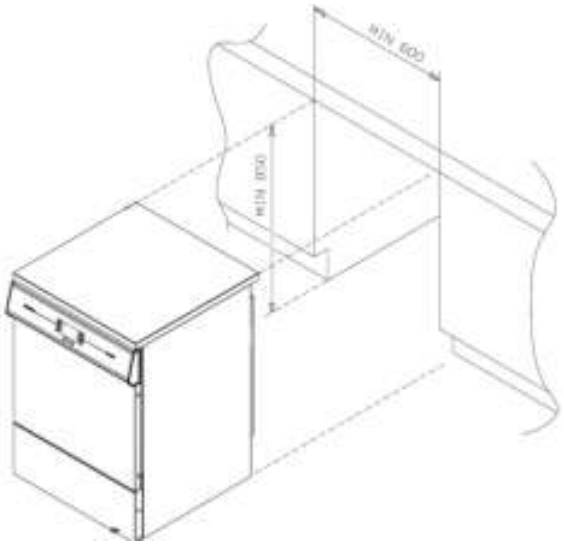

fig. 2 – Diagram, build-under

	IMPORTANT Models equipped with condensers must be supplied with cold water in the specified temperature range if the condenser itself is to work properly

BACK PANEL CONNECTIONS

ID	Description
A	Hot water supply hose (red collar)
B	Cold water supply hose (blue collar)
C	Power supply cable
D	Steam condenser drain hose (as applicable)
E	Dishwasher drain hose
F	Peristaltic pump P1 priming hose and P1 tank detergent sensor cable (OPTIONAL)
G	Peristaltic pump P2 priming hose and P2 tank detergent sensor cable (OPTIONAL)

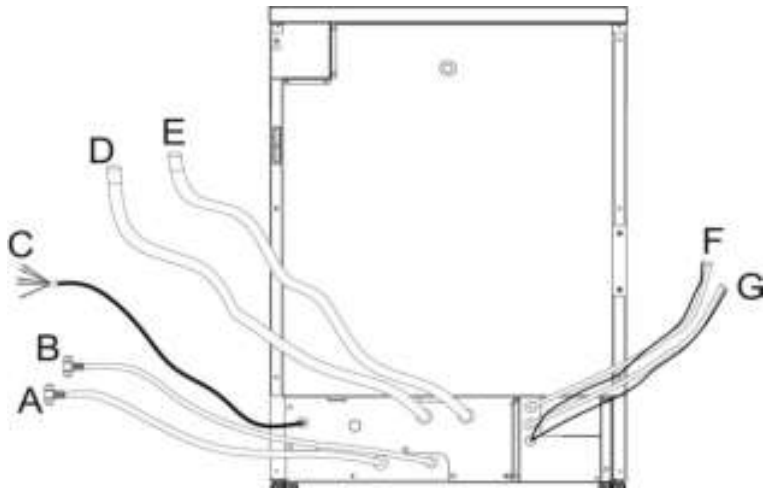

fig. 3 – Diagram, back panel connections and hookup.

INSTALLATION WITH BASE

If the appliance is installed on a base which raises it off the ground (e.g. the Smeg B6040), of height HB (height of base), all height dimensions relative to ground level indicated in this document must be increased by the said amount HB.

HMi = Hi + HB

Where:

Hi = generic height indicated in document

HB = height of base

HMi = height of dishwasher including base



fig. 4 – Smeg base B6040

The dishwasher is supplied without a power plug, with a cable fitted with pre-isolated terminals.
The electrical hookup to the power supply must be done with an industrial type plug.
The plug and its installation must be supplied by the user.
The plug must be rated for the power cable and the electrical specifications of the H07RN-F dishwasher.

⚠	MASTER POWER SWITCH Each appliance must be fitted with a MASTER SWITCH. Characteristics of the circuit breaker: a) Multi-pole: must disconnect all live wires; b) Easily accessible by the user; c) Easy to operate (no tools required); d) Located in the immediate vicinity of the appliance; e) Clearly marked as master switch. The appliance is equipped with overcurrent protection. However, it is advisable to install the following in the room's electrical enclosure: a dedicated protection device (e.g. thermal cutout or fuses on each phase, rated for the electrical specifications given above).

2.3 Technical characteristics (power, plumbing)

2.3.1 Electrical connections (see nameplate with the technical data)

Legend of abbreviations used for the electrical connections.
Models three phase versions/mono phase:

POWER SUPPLY	CHARACTERISTICS THERMAL CUTOUT	POWER CABLE
400V 3N~ / 50Hz / 12A / 7000W	3P+N, 16A, 230/400V, 6kA	5X2,5mm²
230V 3~ / 50Hz / 19A / 7000W	3P, 20A, 230/400V, 6kA	4X2,5mm²
230V 1N~ / 50Hz / 16A / 3500W	1P+N, 20A, 230/400V, 6kA	3X2,5mm²
230V 1N~ / 50Hz / 12A / 2800W	1P+N, 16A, 230/400V, 4,5kA	3X2,5mm²

Models mono phase:

POWER SUPPLY	CHARACTERISTICS THERMAL CUTOUT	POWER CABLE
230V 3~ / 50Hz / 30A / 7000W	1P+N, 40A, 230/400V, 6kA	3X6mm²

2.3.2 Plumbing connections

Legend of abbreviations used for the plumbing connections

ABBREVIATION	Type: FILL/DRAIN	WATER TYPE
CW	FILL CYCLE	Cold water hose – CW – Temperature >5°C <30°C
DW	FILL CYCLE	Hot water hose – DW – Temperature max. 60°C
d	DRAIN	Dishwasher drain hose – d
cd	DRAIN	Steam condenser drain hose - cd (as applicable)

FILL CYCLE - WATER SUPPLY FITTINGS
The dishwasher has two water supply hoses, one for the mains water supply and one for hot water.
The hoses are designed for connection to 3/4'' gas threaded fittings.
Use the supplied filter, A in the figure, when connecting the end of the fill hose.

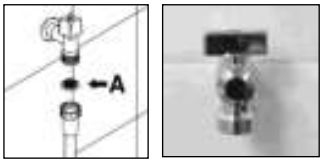

fig. 5 – Fit the provided filters when connecting the hose

POSITION OF FILL COCKS
The fill cocks must be located next to the appliance, in an easily accessible position. Refer to the following figure, the recommended dimensions are:
N.B.: to prevent blockages and damage, if the water hose is new or has not been used for a long time, make sure that the water is pure and clear before making the hookup.

	CAUTION – MAINS WATER HARDNESS To be done by the user: check the mains water hardness. Only if the hardness of the mains water is known can the Smeg technician set the dishwasher's parameters for the integrated water softener. You should run regular checks (e.g. once or twice a year) of the mains water quality to ensure that the initial values are maintained and adjust the dishwasher's settings if necessary.

DW: HOT WATER – this connection is optional but highly recommended; if hot water is available, using it reduces the dishwasher cycle times to a minimum

	CAUTION – NO HOT WATER If no hot water supply is available, connect the hose to the cold water intake

2.4 Drain hose connections

The dishwasher has one or more drain hoses, depending on the model.
Rubber terminal for dia. 21mm (1/2") hose clamp.
The drain hoses are indicated as:
d - dishwasher drain hose – d (drain tank)
cd - steam condenser drain hose – cd (condenser drain)
The following table and diagram summarise the situation.



fig. 6 – Diagram, the drain connections may be made on the right or left of the appliance,

while accounting for the maximum clearance indicated by the product

N. DRAIN HOSES	Dimension "I" Distance of drain from side of appliance [cm]	DRAIN TYPE AND DIMENSION "H" ABOVE GROUND LEVEL [cm]		
		Type	Hmin	Hmax
1	50	d	65	80
2	50	d	65	80
		cd	65	80

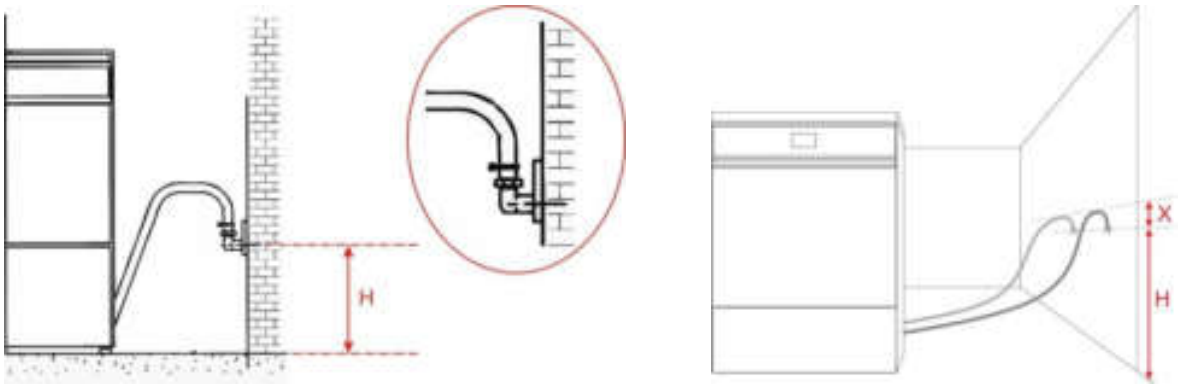

fig. 7 – Drain connection. Drain connections – 65 cm < H < 80 cm. Dimension "X": use only original drain hoses and the supplied tube bend guides. The dimension "X" between the drain fitting and the highest point of the hose must not exceed 20cm: X < 20cm. Models with steam condensers, whose model designation terminates with "-C", are equipped with 2 drain hoses.

⚠	WARNING The drain connection must comply with international regulations: our company declines any liability should improper use of the dishwasher result in environmental pollution.

General instructions for installing the drain
Make sure to use a drain with siphon. When installing the drain connection, take the following precautions:

- Since the drain water temperature can be as high as 95°C (models with thermodisinfection), **the end of the drain hose must be fixed permanently to the hose fitting**, using the provided **hose clamps**.
- The drain hose may not have tight bends or constrictions.
- The end of the drain hose must be at a height off the surface supporting the dishwasher which **complies with specifications.**
- It may not be submerged in water.
- The **internal diameter** of the drain pipe must be **no less than 40 mm**.
- We recommend using a drain pipe of **50 mm diameter**.
- Do not install extensions to the drain hose supplied with the appliance. Extension can result in a return flow back into the tank.

2.5 Noise

Noise level: < 60 dB (A)

2.6 Protection rating (IP)

The dishwasher is guaranteed IPX1

2.7 Environmental conditions (storage and operating)

Operation	use indoors
Altitude:	up to 1,000 m above sea level
Ambient temperature:	10°C - 35°C
Max. relative humidity:	80% for temperatures up to 31°C, decreasing linearly to 50% at 35°C.
Storage:	0°C - 40°C, relative humidity < 80%, decreasing linearly to 50% at 40°C.

2.8 Safety precautions and instructions

	The nameplate with the technical data, serial number and mark is in a visible position on the inside border of the door. Never remove this nameplate.
	Never leave packaging residues unattended in the home. Separate waste packaging materials by type and consign them to the nearest recycling centre.
	The appliance must be connected to earth in compliance with electrical safety regulations. The manufacturer declines all liability for injury or damage deriving from a non-existent or defective earth connection.
	If the appliance is installed on flooring with a covering, make sure that the bottom openings are not obstructed.
	Once no longer in use, the appliance must be rendered unusable. Cut the power cable after pulling the power plug out of the mains socket. Disable/render harmless any parts which may be hazardous for children (locks, doors, etc.).

	This appliance is marked in compliance with European Directive 2002/96/EC on waste electrical and electronic equipment (WEEE). Make sure that it is scrapped correctly to safeguard the environment and health. The symbol on the product or technical documentation indicates that the product is not to be treated as ordinary domestic waste but must be delivered to an authorised sorted waste management and recycling facility for electrical and electronic equipment. Decommission the appliance in compliance with local waste management regulations. For further information on the treatment, recovery and recycling of this product, contact the local authority, domestic waste collection service, or your Smeg reseller.
	Do not use equipment which has been damaged during transport! In case of doubt, contact your reseller. The appliance must be installed and hooked up in accordance with the manufacturer's instructions or by a qualified technician.
	This dishwasher may only be used by adults. Use by persons with reduced mental and/or physical capabilities is only permitted under the supervision of a person responsible for their safety. Keep children away from detergents and packaging materials (plastic bags, polystyrene, etc.), and never allow them to approach or play with the dishwasher, since it might contain detergent residues capable of causing permanent damage to the eyes, mouth and throat, and even leading to suffocation.
	Never place solvents such as alcohol or turpentine, which are potentially explosive, inside the appliance. Never load dishes dirty with ash, wax or paint.
	Leaning or sitting on the open door of the instrument washer can tip it over, putting people in danger. Never leave the dishwasher door open; people might trip over it.
	Do not drink any water remaining in the dishes or dishwasher after a washing program.
	Knives and other kitchen equipment with sharp edges must be placed in the basket with their tips downwards, or horizontally in the top basket; take care not to injure yourself on any sharp edges protruding from the baskets.
	Models with acquastop. The acquastop device prevents flooding in the event of water leaks. Once the acquastop device has tripped, you must contact a qualified technician to troubleshoot the problems.
	Immediately after installation, test the appliance as instructed later in this manual. If the appliance does not operate, disconnect it from its power supply and contact your local service centre. Never attempt to repair the appliance yourself.
	The appliance satisfies all established safety regulations governing electrical equipment. Any technical checks are to be done only by specialised and authorised technical staff: repairs done by unauthorised persons not only void the warranty but may be hazardous to the user.

	Replace any faulty parts only with original spare parts. The manufacturer is not liable in any way for damage resulting from the use of unauthorised spare parts.

***The manufacturer declines all responsibility* for injury or damage caused by failure to comply with the above regulations or deriving from tampering with even just one part of the appliance and the use of non-original spare parts.**

3 SYMBOLS

	WARNING
	**Read this information carefully.** Symbol to the side of especially important instructions or information.
	**At the end of its life, the dishwasher may be contaminated,** especially as regards the tank and plumbing circuit (e.g. if put out of service due to a fault which compromised the effectiveness of the last wash cycle): observe all appropriate precautions when scrapping it. This appliance is marked in compliance with European Directive 2002/96/EC on waste electrical and electronic equipment (WEEE). Make sure that this product is scrapped correctly to safeguard the environment and health.
	**Caution, danger: refer to the manual.** Symbol on the product's nameplate, used to underline the need to read the manual before operating the dishwasher. The symbol is also used in the manual next to safety information and instructions.
	**Caution - electrocution hazard.** Symbol located next to live equipment – disconnect the power supply before working on such equipment. Do not touch live equipment if the power supply has not been disconnected.
	**Transport and unpacking**

4 PREPARING THE APPLIANCE FOR USE

4.1 Removing the packaging, inspection

After removing the packaging (straps, cardboard, wooden base and PVC cover) check the condition of the appliance; the filling and drain hoses, power cable, and metal parts must all be securely fixed and undamaged.

4.2 Scrapping the packaging material

The packaging components (plastic bags, expanded polystyrene, nails, etc.) must not be left within reach of children and pets since they are potentially dangerous. All packaging materials used are environment-friendly. They can be kept without constituting any hazard, or may be disposed of at a specialist waste disposal centre. Plastic components suitable for recycling are marked as follows: PE polyethylene: external packaging film, bag containing the instructions, protective bags. PP polypropylene: straps. PS expanded polystyrene: protective

corners, cover. Wooden and cardboard components can be disposed of in accordance with the relevant regulations.

4.3 Installing the appliance

The dishwasher must be installed by an authorised technician. Do not install a dishwasher which has been damaged during transport. Do not install the dishwasher near to sources of heat (e.g. gas burners, stoves, fireplaces, etc.) since they can damage it. When installing the dishwasher in a compartment next to one or more other appliances, it is essential to comply with all the recommendations provided by the appliance's manufacturer (clearances, installation procedures, etc.). If the dishwasher is installed in a raised position, make sure that the unit and dishwasher are installed properly and do not constitute a hazard. Do not install the dishwasher in areas subject to freezing temperatures or at risk of explosion. Use only professional furnishings and units in the vicinity of the dishwasher. Any other types of furnishing may be damaged. Immediately after installation, test the appliance as instructed later in this manual. If the appliance does not operate, disconnect it from the mains and contact your local service centre. Never attempt to repair the appliance yourself.

4.4 Preliminary settings and adjustments

The electrical protection system must undergo a functional test before the appliance is put into operation. The appliance must be installed and/or inspected by qualified staff, who will start it up for the first time and provide the relevant operating instructions.

4.4.1 Opening the door

We consider the door opening procedure here to facilitate access to the interior of the machine.
The remaining controls are covered in the following paragraphs.
The machine is equipped with an **automatic door lock**.
Do not force the door open, rather proceed as follows:

- Connect the machine to its power supply.
- Hold the button marked **On/Off** down for 2 seconds to turn the machine on.
- Press the **Open door** button: the machine ***beep*** when the signal is received; release the button and the door will open of its own accord after a few seconds.

DOOR OPEN BUTTONS			
	**On/Off**		**Open door**

4.4.2 Manual door release

In case of malfunction or power failure, the door can be opened manually by using a screwdriver in the opening mechanism; take care not to damage the dishwasher when doing so.

1. This can only be done with the machine in stand-by, not while a cycle is running.
2. Caution: before opening the machine manually, disconnect it from its power supply.
3. Insert the screwdriver into the bottom central hole in the control panel, as shown below.
4. Push the pin upwards until the mechanism releases.

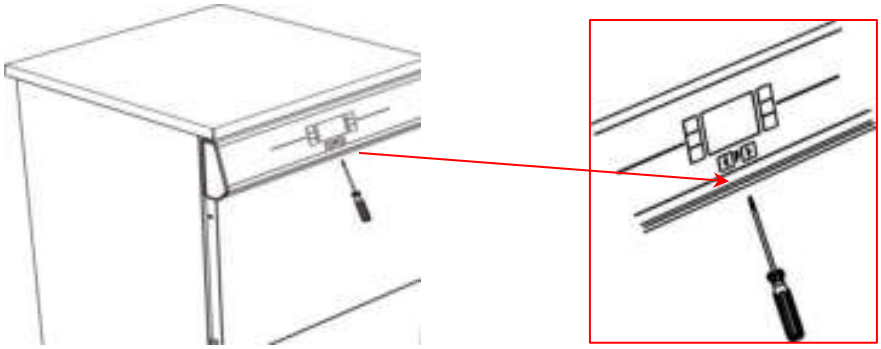

fig. 8 – Diagram, manually releasing the lock in case of emergency.

4.5 Operator and technician authorisations

The appliance may only be installed, serviced or repaired by a technician authorised to do so by the Manufacturer.
Repairs done by unauthorised persons not only void the warranty but may be hazardous to the user.
Only use original Smeg spare parts when replacing components.

4.6 Precautions before use

First start-up

The electrical protection system must undergo a functional test before the appliance is put into operation. The appliance must be installed and/or inspected by qualified staff, who will start it up for the first time and provide the relevant operating instructions.

Preparing for use (important)

If the detergent and rinse aid dispensers are present, put the external detergent and rinse aid containers in place and insert the respective intake hoses on the rear of the appliance into them.
Red hose: detergent, white hose: rinse aid.
N.B.: charge the pumps as instructed below.

4.7 Precautions when the appliance is not in use

4.7.1 If the dishwasher is not being used

If you intend to leave the dishwasher out of use for a long time, proceed as follows.
This is particularly advisable if the machine is not to be used for more than 24 hours.

- Run an empty PREWASH cycle.
- Disconnect the machine from the mains.
- Leave the door slightly open in order to prevent the formation of unpleasant odours inside the wash tank.
- Close the water supply cocks.

4.7.2 Use after a period of disuse

If the appliance has not been used for a long time, proceed as follows before running a cycle.

- Inspect the water intake filters and check that there are no deposits of sludge or rust inside the water pipe: if there are, run water from the water supply cock for a few minutes.
- Restore the mains connection.
- Open the cocks.
- Run an empty PREWASH cycle.

5 OPERATING INFORMATION AND INSTRUCTIONS

5.1 Safe use

After the installation procedure described above, note that the dishwasher is intended for professional use only and may only be used by authorised staff.

DANGER - HOT SURFACES
The dishwasher can run heat disinfection cycles at water temperatures up to 93°C. It may occur that water remains in the tank in case of malfunction; avoid contact with the skin due to the danger of scalding and irritation due to toxic chemical products. Never touch the heating elements in the tank. Contact authorised Smeg technical staff in case of malfunction.

5.2 Using the water softener

The quantity of lime in the water (which indicates its hardness) causes whitish marks on dry dishes and dishes also tend to lose their shine over time. The dishwasher is equipped with an automatic water softener which removes the substances that cause hardness from the water with the aid of regenerating salt.

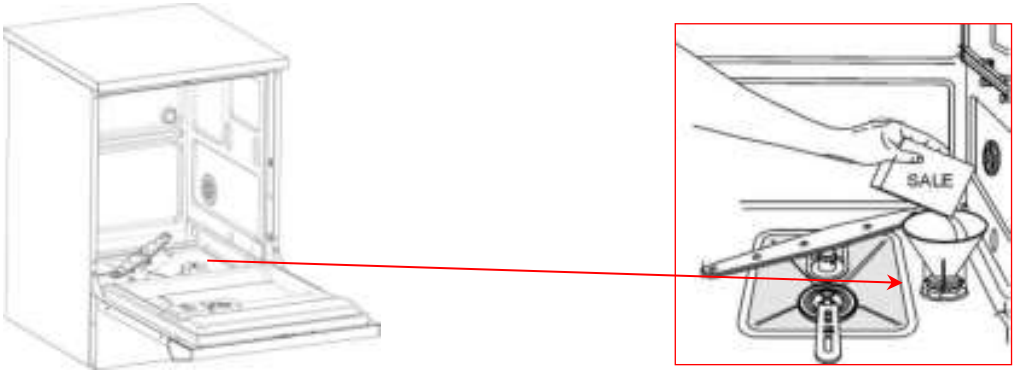

fig. 9 – The salt container is accessible with the door open; filling the water softener container with salt.

When using water of medium hardness, the salt container should be refilled after approximately 20 wash cycles. The salt container can hold approximately **1 kg** of salt grains.
The container is situated at the bottom of the dishwasher.
Remove the lower basket and undo the salt container cap by turning it anticlockwise and pour in the salt using the funnel supplied. Do not allow salt to spill into the interior of the dishwasher. Remove any salt residues around the opening before screwing the cap back on.

ATTENTION

- ***The first time the dishwasher is used, a litre of water must be poured into the tank with the salt.*** *Each time the salt container is refilled, make sure that the cap is securely closed. The mixture of water and detergent must not get into the salt tank, as this would impair operation of the regeneration system. In this case warranty cover will be forfeited.*
- ***Use only granular salt for dishwashers.***
- ***Do not use table salt****, since it contains insoluble substances which can compromise the operation of the softener system over time.*
- ***The salt container should be refilled before starting the wash program****. This way, the excess saline solution will be immediately removed by the water; prolonged presence of salt water inside the tank may lead to corrosion. Run a prewash cycle to achieve the same purpose, if necessary.*

5.3 Using detergent and rinse aid

The machine is equipped with a device for dosing the detergent and rinse aid, mounted inside the door. Except for the prewash cycle, you must fill the dispenser with the proper amount of detergent before each wash.
WARNING: If optional peristaltic pumps P1 and P2 are installed, do not use the door dispenser since it is disabled electrically (the door remains always shut)
Open the cover of the detergent dispenser with its lever. Now fill with detergent and close again carefully.
To fill up the rinse aid, remove the cap and fill to the level shown by the indicator (D).

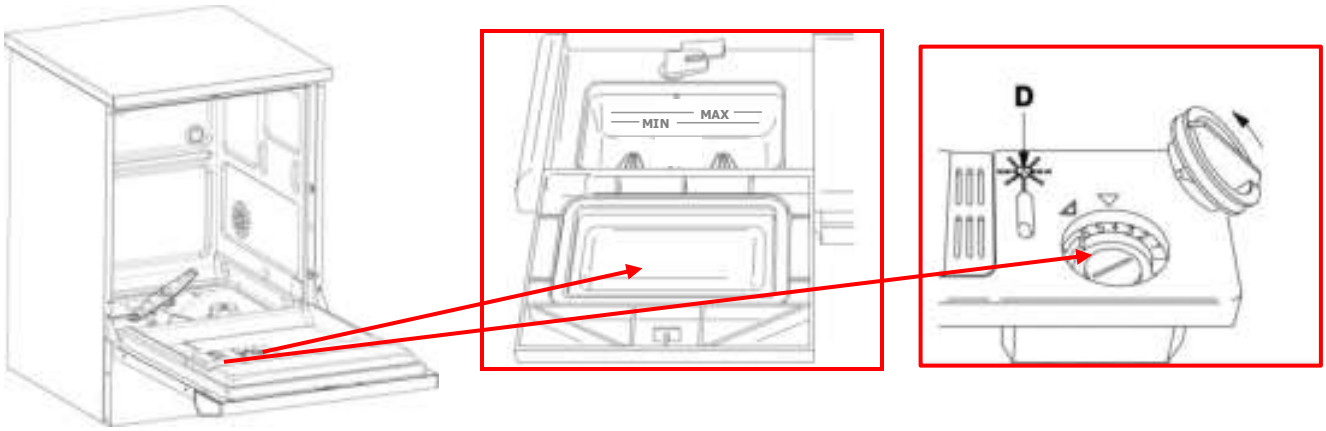

fig. 10 – Powder detergent and rinse aid dispenser, accessible with the door open.

During the wash cycle, the dispenser will open automatically.
Make sure to use good quality detergent for best results. Keep the detergent containers closed and in a dry place to prevent lumps forming, as these can compromise the wash.

	**IMPORTANT!** Use powder detergent and not detergent tablets for short cycles

5.3.1 Correct use of the peristaltic pumps – OPTIONAL

	***WARNING*** ***The peristaltic pumps must be installed by a technician authorised to do so by Smeg.*** After installation, they must be enabled (see SET-UP)

In this case, do not use the door dispenser; the machine must be hooked up to the detergent (red hose) and rinse aid (transparent hose) containers.
After the containers have been opened, they must not be kept for too long since the detergent loses its power and can form lumps which compromise the wash cycle.



During the installation and ***when replacing a completely empty container of fluid,*** *run the service program (Prg.8) to load the fluid. The hose running from the container to the pump must be charged to ensure that the product is batched properly in wash cycles.*

5.3.2 Tank level sensors - OPTIONAL

The machine can be equipped with level sensors in the detergent and rinse aid intake hoses.

WARNING
The level sensors must be connected electrically to the terminal block on the inside of the rear strut (there is a sensor connection for each peristaltic pump).
This must be done by a technician authorised to do so by Smeg.

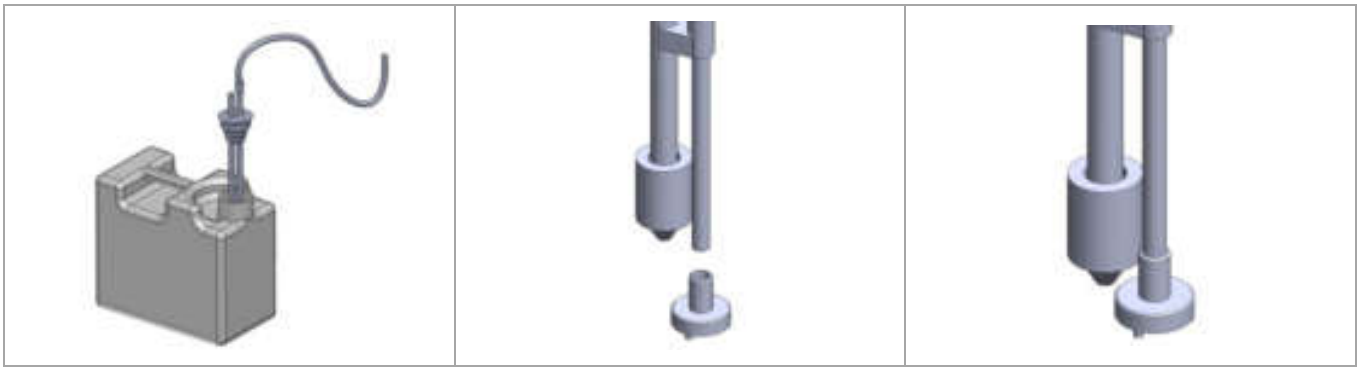

fig. 11 – Configuration with LEVEL SENSOR: Detergent intake nozzle with integrated level sensor. The intake nozzle is fitted with a filter; make sure this is always properly located to prevent lumps being drawn up.

ATTENTION
If the level sensors are not present, check the container level regularly so as not to run cycles without detergent or rinse aid.

WARNING
It is essential that the label on the intake hose match the type of chemical product in use.
Connection errors, which lead to the mixture of diverse chemical products in the intake circuit can irremediably damage the circuit and void the warranty for the parts in question (peristaltic pumps, detergent suction and delivery circuit)
The intake hose is supplied with an intake filter. The filter is secured to the hose with a light interference fit. Make sure the filter is present and properly located to ensure that the detergent intake system can operate properly.

	Check from time to time that the silicone hose is properly secured to the stainless steel intake pipe, and that there are no leaks. Use proper clamping equipment (such as plastic pull ties) to secure the silicone hose to the stainless steel pipe.

5.4 Description of controls and wash programs

5.4.1 Controls

All the dishwasher's control and monitoring equipment is located on the front panel.

CONTROL PANEL SWT262	CONTROL PANEL SW262
	

CONTROL PANEL SWT260X	CONTROL PANEL SWT260
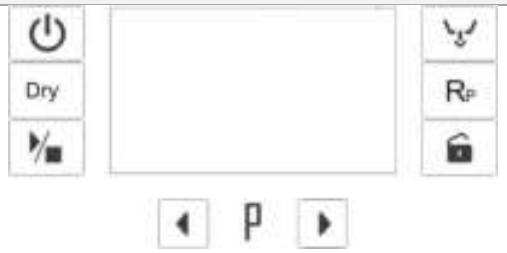	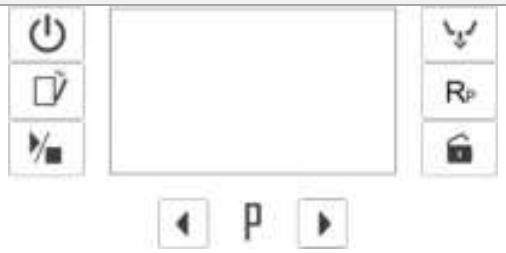

CONTROL PANEL SYMBOLS			
SYMBOL	**MEANING**	**SYMBOL**	**MEANING**
	**On/Off**		**Drain**
	**Auto open** **(where expected)**		**Repeat** **(where expected)**
	**Dry** **(where expected)**		**Additional Prewash** **(where expected)**
			**Open door**
	**Start/Pause**		**Select**

5.4.2 Detailed description

BUTTONS	DESCRIPTION
	**On/Off** The button is enabled with the door open or closed. The button turns the interface on/off, thus permitting the dishwasher to be operated. Hold the button down for 2 seconds to turn it on or off.

BUTTONS	DESCRIPTION
	Fast old down: show the remaining time Once on, the dishwasher displays the program ID (e.g. "*Pr 03*"). When the interface is switched off, the display reads "*OFF*". When the door is open the display shows four dashes and the other buttons are disabled. If the dishwasher is switched off with the water in the tank, the "OFF" flashing, at the end becomes fixed . The dishwasher is still powered up even with the interface turned off.
	**Auto Open – open door at end of cycle (model SWT262)** This button sets the door open function - see below for restrictions when running a heat disinfection cycle. The button is not enabled for the prewash and service cycles. It is alternative to the Repeat function. There is no need to press the button for every cycle; it remains active once pressed
	**Dry – drying (ONLY MODELS WITH DRYER – SWT260X)** The button is sued to set the drying function and is only active in programs which use this option – see programs table. It is alternative to the Repeat function. There is no need to press the button for every cycle; it remains active once pressed.
	**Additional prewash** The button is sued to set the additional cold prewash at the beginning of each cycle . There is no need to press the button for every cycle; it remains active once pressed.
	**Start/Pause** Starts a new cycle or pauses the current one. Must be held down for 2 seconds. When the cycle starts or pauses, a double *beep* will sound. The button can also be used to confirm a dishwasher parameter during configuration (hold down for 2 seconds).
	**Drain** Once a wash cycle has terminated, pressing this button drains the water, runs a regeneration cycle (as applicable) and automatically turns the dishwasher off. Confirm with start/pause, the display reads "UnLoad". If the automatic regeneration phase is done, "OFF" an "R" flashing until end of phase.
BUTTONS	**DESCRIPTION**
	**Repeat** Pressing this button reuses the water from the most recent rinse for the next cycle's wash to speed up operation, in programs which have this option. This is not available if you have selected drying or automatic open at end of cycle.
	**Open door** The door opens automatically with an electric lock, and is only possible when certain conditions obtain. Simply press the button; the door opens when it is released.
	**Select** Press the button > to go to the next program or < to the previous one; the selection cycles from last to first and vice-versa depending on direction; the selected program is displayed with "Pr" and the program number. Hold down the button to scroll through the programs quickly.

5.5 Indicator light – Meaning

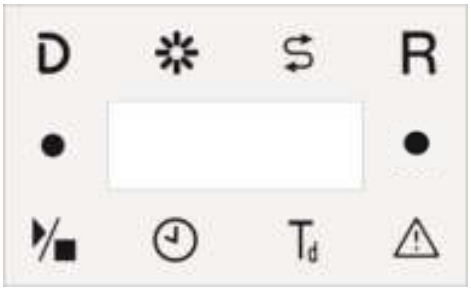

fig. 12 – In the display area of the control panel: central digit area and indicator light around the perimeter

Led symbol	ON THE DISPLAY	Meaning
D		**No detergent** (only if the level sensor is installed in the container)
✲		**No rinse aid** (only if the level sensor is installed in the container)
⇆		**No salt:** you must add salt. When the appliance is turned on, there is still some reserve; fill the salt container as soon as possible after switching the machine on and before running the next cycle.
R		**Regeneration**: indicates that the resins are almost exhausted; run a regeneration cycle. There are two ways to regenerate the resins : - push the ON/OFF button to switch off the appliance, the writing OFF flashes on the display until regeneration cycle has finished (about 5 minutes). - Push the Drain button (See 5.4.2) and wait until the appliance has finished complete drain and regeneration (about 8 minutes). During regeneration, “OFF” and “R” flash on the display.
●		**Selected function**: indicates that the corresponding function is activated Left: automatic open door or dry Right: repeat or added prerinse.
RP		**Repeat:** at the end of the cycle the dishwasher does not drain but holds the water for next cycle – only available with certain programs.
▶/■		**Start/Pause:** wash cycle enabled/disabled.
🕒	1:16	**If the dishwasher is stopped** The value gives the nominal cycle duration. The time led also turns on. The duration is approximate, depending on load, intake water temperature and power connection. Show by faster hold down on/off **If a cycle is running** Remaining cycle time. After 5 seconds of user inactivity, the display returns to the program number.
Td		The selected cycle includes a final heat disinfection step – see table of programs – only on models with this option.
⚠		**Alarm** The dishwasher encounters an anomaly - caused by a malfunction or anomalous conditions. **The displays shows the number of the alarm**. In the alarms table in this manual, each code is matched with the components which

		may have caused the event as an aid to troubleshooting. Record all alarms and inform technical service accordingly in case of need.

5.6 Loading tableware

5.6.1 Example loads

Bottom basket	Top basket
	
	

fig. 13 – Example loads

5.7 Setting the wash program

5.7.1 Models SW262



Depending on the type of dirt and the amount of tableware loaded into the baskets

PROGRAM	Type of soiling	**Powder detergent** (when a detergent peristaltic pump is not installed)
P 1	Specifically for glasses, with cold final rinse	15 grams

P 2	Lightly soiled dishes, washed immediately after use.	20 grams
P 3	Normally soiled dishes, washed immediately after use.	20 grams
P 4	Lightly soiled dishes	20 grams
P 5	Normally soiled dishes	25 grams
P 6	Heavily soiled dishes	25 grams
P 7	Program for rinsing to prevent soil from drying	-
P 8 (service)	Service program, for use only for filling the product dispensing circuit (if optional peristaltic pumps are installed)	

Program sequence

PROGRAM	PREWASH	WASH (°C/ EXTENS.)	HOT INTERMEDIAT RINSE	FINAL RINSE (°C/ EXTENS.)	REPEAT FUNCTION AVAILABLE	FUNCTION AUTO-OPEN AVAILABLE	CICLE TIME DISPLAY	
					ALTERNATIVE AUTO-OPEN	ALTERNATIVE A REPEAT	REPEAT WITH ACTIVE	STANDARD
P 1	-	50° /1’	-	Cold	-	-	-	6(7*)
P 2	-	50° /1’	-	52° /1’	(X)	(X)	5(6*)	7(8*)
P 3	-	55° /2’	-	55° /1’	(X)	(X)	6(7*)	8(9*)
P 4	Hot	55° /2’	-	65° /1’	-	X	-	14(15*)
P 5	Hot	60° /3’	X	65° /1’	-	X	-	21(22*)
P 6	Hot	65°/3’	X	70° / 1’	-	X	-	23(24*)
P 7	Cold	-	-	-	-	-	-	-

*** ONLY IF PERISTALTIC PUMP INSTALLED (WITH STANDARD DOSE)**

Important:

	If the Repeat function is enabled, leave the door ajar after unloading the dishes if the appliance is not to be reused at once; if it is out of use for some time, perform a pump-out cycle before reusing it to **prevent foaming.**

5.7.2 Models: SWT262



Depending on the type of dirt and the amount of tableware loaded into the baskets

PROGRAM	Type of soiling	Thermal disinfection	**Powder detergent** (when a detergent peristaltic pump is not installed)
P 1	Lightly soiled dishes	Medium temperature, short	20 grams
P 2	Heavily soiled dishes	Medium temperature, short	25 grams
P 3	Lightly soiled dishes	Medium temperature, long	20 grams
P 4	Heavily soiled dishes	Medium temperature, long	25 grams
P 5	Lightly soiled dishes	High temperature, short	20 grams
P 6	Heavily soiled dishes	High temperature, long	25 grams
P 7	Program for rinsing to prevent soil from drying	-	-
P 8 (service)	Service program, for use only for filling the product dispensing circuit (if optional peristaltic pumps are installed)		

Program sequence

PROGRAM	PREWASH	WASH (°C/ EXTENS.)	HOT INTERMEDIAT RINSE	FINAL RINSE (°C/ EXTENS.)	REPEAT FUNCTION AVAILABLE	FUNCTION AUTO-OPEN AVAILABLE	CICLE TIME DISPLAY	
					ALTERNATIVE AUTO-OPEN	ALTERNATIVE A REPEAT	REPEAT WITH ACTIVE	STANDARD
P 1	Hot	60° /3’	-	85°/1’	X	X	25(26*)	20(21*)
P 2	Cold	65° /3’	X	85°/1’	X	X	35(36*)	30(31*)
P 3	Hot	60° /3’	-	85°/3’	X	X	27(28*)	22(23*)
P 4	Cold	65° /5’	X	85°/3’	X	X	39(40*)	34(35*)
P 5	Hot	60° /5’	-	93°/5’	X	X	33(34*)	28(29*)
P 6	Cold	65°/5’	X	93°/10’	X	X	48(49*)	43(44*)
P 7	Cold	-	-	-	-	-	-	-

*** ONLY IF PERISTALTIC PUMP INSTALLED (WITH STANDARD DOSE)**

For particularly stubborn or partially dried soiling, select  for an additional cold prewash

5.7.3 Model SWT260X e SWT260:

CONTROL PANEL SWT260X	CONTROL PANEL SWT260
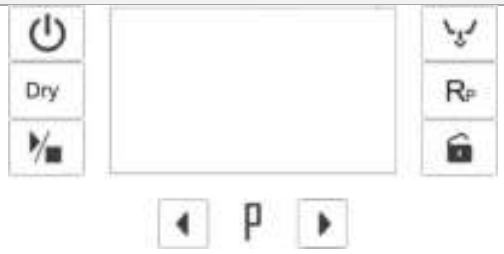	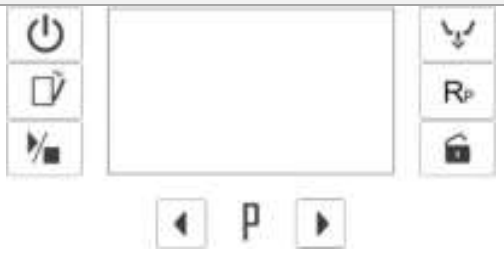

Depending on the type of dirt and the amount of tableware loaded into the baskets

PROGRAM	Type of soiling	**Powder detergent** (when a detergent peristaltic pump is not installed)
P 1	Specifically for glasses	15 grams
P 2	Lightly soiled dishes, washed immediately after use.	20 grams
P 3	Normally soiled dishes, washed immediately after use.	20 grams
P 4	Heavily soiled dishes	25 grams
P 5	Normally soiled dishes, with final thermal disinfection	25 grams
P 6	Heavily soiled dishes, with final thermal disinfection	25 grams
P 7	Program for rinsing to prevent soil from drying	-
P 8 (service)	Service program, for use only for filling the product dispensing circuit (if optional peristaltic pumps are installed)	

Program sequence SWT260X

PROGRAM	PREWASH	WASH (°C/ EXTENS.)	HOT INTERMEDIAT RINSE	FINAL RINSE (°C/ EXTENS.)	FUNCTION REPEAT AVAILABLE	FUNCTION DRYING	CICLE TIME DISPLAY		
					ALTERNATIVE DRYING	ALTERNATIVE A REPEAT	REPEAT ACTIVE	STANDARD	DRYING
P 1	-	45° /1’	-	55° /1’	(X)	(X)	5(6*)	7(8*)	18(19*)
P 2	-	55° /2’	-	62° /1’	(X)	(X)	8(9*)	10(11*)	25(26*)
P 3	-	60° /2’	-	65° /1’	(X)	(X)	11(10*)	12(13*)	32(33*)
P 4	Cold	65° /5’	-	70° /1’	-	X	-	23(24*)	44(45*)
P 5	-	60°/5’	X	93° /5’	-	X	-	30(31*)	60(61*)

P 6	Cold	65°/5’	X	93°/ 10’	-	X	-	43(44*)	78(79*)
P 7	Cold	-	-	-	-	-	-	-	-

*** ONLY IF PERISTALTIC PUMP INSTALLED (WITH STANDARD DOSE)**

Program sequence SWT260

PROGRAM	PREWASH	WASH (°C/ EXTENS.)	HOT INTERMEDIAT RINSE	FINAL RINSE (°C/ EXTENS.)	FUNCTION REPEAT AVAILABLE	FUNCTION AUTO-OPEN AVAILABLE	CICLE TIME DISPLAY	
					ALTERNATIVE AUTO-OPEN	ALTERNATIVE A REPEAT	REPEAT WITH ACTIVE	ALTERNATIVE A REPEAT
P 1	-	45°/1’	-	55° /1’	(X)	(X)	5(6*)	7(8*)
P 2	-	55°/2’	-	62° /1’	(X)	(X)	8(9*)	10(11*)
P 3	-	60°/2’	-	65° /1’	(X)	(X)	11(10*)	12(13*)
P 4	Cold	65°/5’	-	70° /1’	-	X	-	23(24*)
P 5	-	60°/5’	X	93° /5’	-	X	-	30(31*)
P 6	Cold	65°/5’	X	93°/ 10’	-	X	-	43(44*)
P 7	Cold	-	-	-	-	-	-	-

*** ONLY IF PERISTALTIC PUMP INSTALLED (WITH STANDARD DOSE)**

Important:

	Table’s value are referred to machine working with 400V 3N~ electric and 55°C hot water supplies and with no load inside.
	If Repeat is enabled, leave the door slightly open after unloading the tableware if the machine is not to be used again immediately; if the pause is very long, run a drain cycle first to **prevent foaming.** Some wash programs automatically run a quick hot water prewash.

5.8 Drying cycle

The drying cycle runs at the end of the wash program, see table of programs.
If the current program includes drying, the respective indicator light turns on.

5.9 Repeat (as applicable)

The Repeat function speeds up operation by reusing the last rinse water for the next wash.

5.10 End of cycle

Once the program has terminated, the display reads “End” alternating with the program code.
The “End” message only displays if all steps of the program have concluded successfully; it does not display if the program has been paused, if a malfunction has compromised the result of the wash, or if the auto open option is enabled.
The end of the signal is confirmed by a beep sounding.

	**SWT262** If auto open is enabled, the door opens automatically and 4 horizontal dashes display. Auto open is not enabled if alarms occur during the program or if Repeat is enabled. The respective indicator light turns on to confirm that the option has been enabled. **SWT260X** If the dry option has been enabled, the drying indicator light turns on: For programs which include this option, the indicator light is: 1. Steady on when a program is running or has terminated successfully;

	2. Flashing if drying is interrupted, during cooling, or at end of cycle due to a power failure or forced interruption.

5.11 Selecting the washing program

To run a program:

1. If the dishwasher is off, turn it on with the On/Off button (hold down for 2 seconds).
2. Close the door by pressing it in until it clicks closed. The buttons are only enabled when the door is closed.
3. Select the program with the selection buttons.
4. You can now view the nominal program duration by pressing the ON/OFF button.
5. To start the cycle press the Start/Pause button (hold down for 2 seconds).
6. The start of the cycle is confirmed by two beeps sounding.
7. Once the program has terminated, the display reads “End” alternating with the program code.

5.11.1 Perform resins regeneration.

When “R” light is on, we suggest to perform as soon as possible a complete drain phase; in this way the machine will regenerate resins automatically .

	**NOTE – PROGRAM RUN TIMES** The run times displayed on the control panel are approximate; the temperature and pressure of the water supply will affect the actual duration, among other factors. If necessary, a resin regeneration cycle is run at the end of each program and a resin wash at the start of the next, to ensure that the softener system works properly. If the Repeat function is selected, these cycles do not run automatically, but must be selected by the operator when the warning message displays on the control panel (R). These cycles are not included in the nominal run time display.

5.12 Interrupting a running program

	A program may be interrupted while it is running by pressing the Start/Pause button. While the machine is paused, the display reads “S” followed by the program code.

5.12.1 Pausing a program

A program may be paused while it is running by pressing the Start/Pause button.
The response of the machine to such a command depends on the conditions in the tank, for instance:

- If the tank temperature is less than 75°C: you can open the door, and the program will resume from where it left off if you press and hold down the Start/Pause button again.
- If the interior temperature is greater than 75°C, you must confirm again to open the door and the machine warns you of the interior temperature on the display and by beeping.

5.12.2 Interrupting a program

A program may be interrupted in 2 ways:

1. By setting the machine to “OFF”, after pausing it (see § PAUSING A PROGRAM); in this case, a reset is run when the machine is turned on again;
2. By pausing the program (see § PAUSING A PROGRAM) and then proceeding as follows.

5.13 Reset procedure

The RESET procedure runs a water fill/drain cycle to restore the dishwasher to a safe condition in case of malfunction or an interrupted program.
We also recommend running a RESET when an alarm occurs.
The Reset cycle can also be run for its own sake, regardless of whether an alarm has occurred or not.

N.B.: the RESET procedure can only be run with the door CLOSED.
When an error occurs, generally the device manages the anomaly itself: in this case the alarm code flashes on the display until the problem has been dealt with: no reset commands are accepted during this time.
Any RESET forced by the user will not be accepted until the problem has been dealt with and the alarm code on the display is “steady”.

5.13.1 Running a RESET procedure

In case of alarm or with the dishwasher stopped: press and hold down the Start/Pause and DRAIN buttons together for 2 seconds, until a beep sounds.
The display reads "P-" and the RESET starts.
At the end of the procedure, the display flashes "E-" alternating with the program number, if you are resetting a previously interrupted program, or “End” alternating with “P –“ if you have reset the machine of your own accord.

ATTENTION
If you are unable to run a RESET, before contacting technical service please turn the machine off and on and try again.

6 SETUP MODE AND FUNCTIONS

The dishwasher has a set-up mode for changing its settings.
The washing parameters are not password protected, but the configuration parameters are.

6.1 Entering set-up mode



6.1.1 Entering the USER menu

To enter the wash settings menu, hold down the DRAIN button until the control panel displays “unlo” and then flashes “Set”: release and press the button again immediately, this accesses the USER menu.
In the USER menu you can scroll through the following options with the “A” and “B” buttons:

USER menu options	Description

SET	Sets the dishwasher parameters – see Par. “Set” PARAMETERS for details
Cloc	Time and date – see Par. “CLOC” - DATE AND TIME PARAMETERS for details
Coun	Total hours of operation counter (read only, cannot be modified). This parameter displays on two consecutive screens. The thousands value is followed by “t”, the units value by “u”.

To enter a specific option, press the Start/Pause button.
To return to a higher level, press Open Door.

6.1.2 SET menu

The display reads **Set.**

To select this option, press .
The **Set** option has a variety of individual settings.

Set PARAMETER	DESCRIPTION	POSSIBLE USER ACTION	POSSIBLE TECHNICIAN ACTION
1 –	**Detergent pump P1 batching.** Set the ml/l, the default setting is **3 = 3 ml/l**. (The max. setting is 10 = 9.8 ml/l) Increase/decrease the setting with the **Select buttons.**	X	X
2 –	**Rinse aid pump P2 batching.** Set the ml/l, the default setting is **0,5 = 0,5 ml/l.** (The max. setting is 10 = 1.35 ml/l) Increase/decrease the setting with the **Select buttons.**	X	X
3 –	**Water hardness** Set the hardness in °f, in steps of 5. Range: 0-65°f. The default is **40°f**. Attention: Make sure that the value corresponds to the actual hardness of the water supply.	X	X
4 –	**Additive dispensing type** - dd (powder detergent dispenser) - PP (peristaltic pumps) The default is **“DD”.** Enabling the peristaltic pumps disables the powder dispenser.	X	X
SEr	**Entering the configuration menu** Access to this menu is reserved for technicians for setting up the dishwasher, and is password protected.	--	X

Table of peristaltic pump batching settings:

SET 1 – Detergent		
Value		**ml / liter water**
1		1
2		2
3	default	3
4		4
5		5
6		6

SET 2 – Rinse aid		
Value		**ml / liter water**
01		0,1
02		0,2
03		0,3
04		0,4
05	default	0,5
06		0,6

7		7
8		8
9		9
10		10

07		0,7
08		0,8
09		0,9
10		1

Move from one parameter to the next with A and B ; change the settings with  and  and confirm them by holding down .

To quit **Set** mode, hold down .ù

6.1.3 Parameter "SET 3"

SET 3 **Value**		
°f		**°d**
0		0
5		3
10		6
15		8
20		11
25		14
30		17
35		20
40	**(default)**	**22.5**
45		25
45		28
50		31
55		34
60		37

6.1.4 Cloc menu

The display reads **Cloc.**
The "**Cloc"** menu (an abbreviation of "**CLOCK"**) is used to **set the current date and time**.
The parameter can be set with a user password as well.
Proceed as follows:

a. To select **Cloc**, hold down  when the display reads **"Cloc".**
b. Press A and B to move from one setting to the next.
c. Press  and  to modify the settings.
d. Hold down  to confirm.

e. Hold down  to quit the current parameter or the **Cloc** menu itself.

The parameter flashes while it is being set.

CLOC PARAMETER	DESCRIPTION
C1	Year, last two digits (00-99), e.g. for “2012” enter “12”
C2	Month (1-12)
C3	Day (1-31)
C4	Hour (1-24)
C5	Minutes (0-59)
C6	Seconds (0-59)

6.1.5 Coun menu

The display reads **Coun.**

This menu displays the total number of cycles run with the dishwasher.

To display them, hold down . The value displays in two successive screens. The thousands value is followed by “t”, the units value by “u”.

The parameter is read only and cannot be modified.

7 CLEANING AND ROUTINE MAINTENANCE

7.1 General precautions

	***DISCONNECTING THE POWER AND WATER SUPPLIES*** ***Before working on the machine in any way:*** *disconnect the power supply with the panel master switch or by pulling out the power plug, and shut the water supply cocks.*
	***CLEARANCE*** *You must provide* ***clearance of at least 1m^2 in front of the machine*** *for maintenance.* *Work done on the machine by unauthorised persons is not covered by warranty and is at the client's sole expense and responsibility.* When cleaning and servicing the machine: use ***appropriate individual safety equipment.***

7.2 Description of maintenance and cleaning by the operator

7.2.1 At each use

1. Check the operation of the spray arms and check that the water outlet holes are clean by eye.
2. Check the detergent and rinse aid levels (if peristaltic pumps are installed).
3. At the end of the working day, clean the filters as described below.

7.2.2 Monthly check

1. Check the condition of the water supply solenoid valve filters: clean them, if necessary, by running hot water through them in the opposite direction.
2. Check the condition of the intake hoses and tank filters (as applicable).

7.2.3 Once a year

At the end of the warranty period and every year thereafter and whenever message **A 93** displays, contact your Smeg authorised service centre for a **complete check-up**.

***Maintenance work not covered by the warranty**, which does not cover replacement of parts subject to normal wear and tear.*

7.3 CLEANING THE APPLIANCE and its parts

General cleaning

Clean the outer surfaces and door-lining of the dishwasher regularly using a soft, damp cloth or with a normal detergent suitable for painted surfaces.
Clean the door gaskets with a damp sponge.
After cleaning: run a wash cycle without a load to eliminate any detergent residue.

Cleaning the water intake filter

Water intake filter A on the cock must be cleaned from time to time; this should be done **1 every 2 – 6 months, depending on the quantity of water used**. Close the water supply cock, unscrew the end of the water intake hose, remove filter A and clean it carefully under running water. Reassemble filter A and carefully screw the water intake hose back into position.
Take care not to spill water from the free end of the hose.

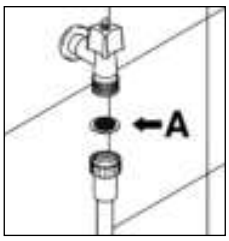

fig. 14 – water intake filter A

Cleaning the spray arms

The spray arms are easily removed by undoing the knurled nut securing them to the rotary shaft, so that the nozzles can be cleaned to prevent blockages.
Wash the spray arms and nozzles under clean running water and carefully reinstall them, checking that their rotation is in no way impeded.
Recommended spray arm cleaning interval: **once a week**.

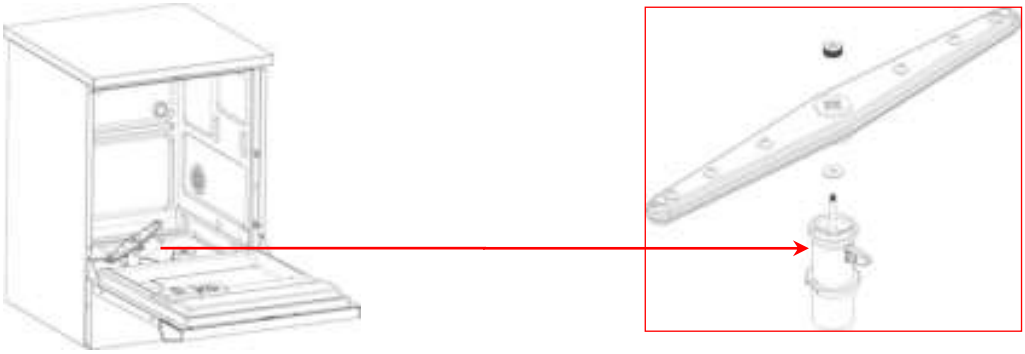

fig. 15 – Lower spray arm: disassemble and clan to ensure effective washing.

Cleaning the filter unit

The filter unit is composed of a filter which collects large sized particles, a conical microfilter and a larger external filter. To ensure that the appliance operates effectively, it is extremely important to keep the filters clean. Inspect them frequently (for instance, if washing glassware with paper labels, inspect them after each

cycle – **in normal conditions, they should be cleaned once a week**) and remove any deposits which may compromise their operation.

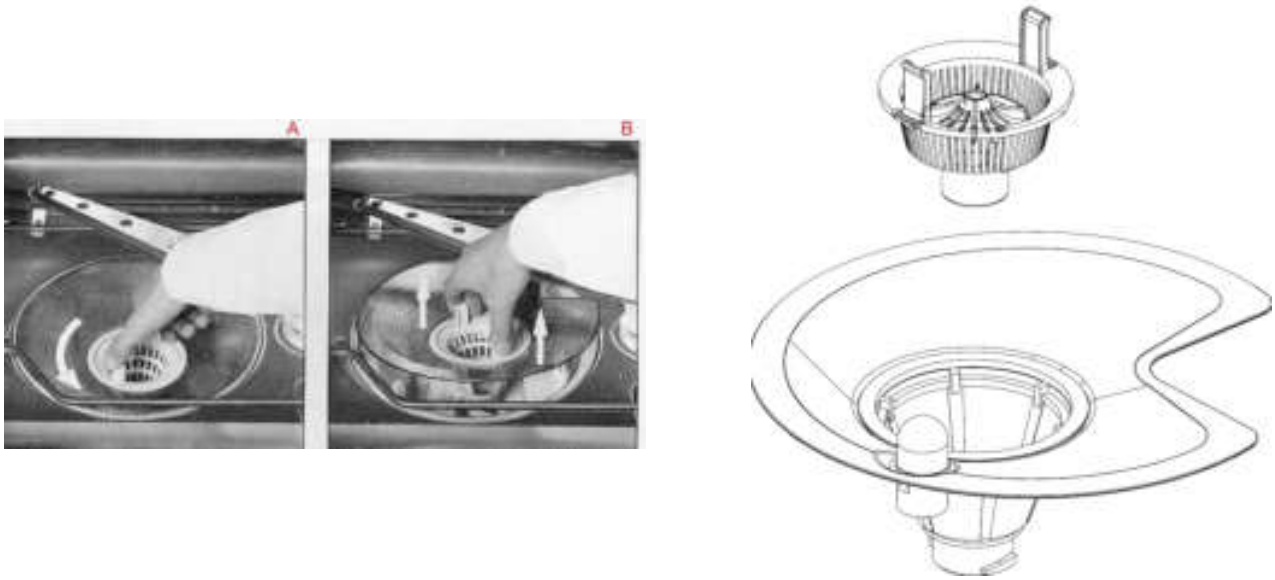

fig. 16 – Chamber drain filter, disassembly procedure and view of parts.

External circular filter
To remove this filter:
- Take hold of the conical filter's tabs and turn anticlockwise (box A).
- Without pressing the tabs, lift the assembly (box B).

When cleaning this filter, the others should also be cleaned.

Good maintenance tips
- The filters should be cleaned under running water using a stiff brush.
- It is essential to thoroughly clean the filters according to the above instructions: the dishwasher cannot function if the filters are clogged.
- Restore the filters before running a wash cycle.

7.4 Description of maintenance and cleaning by the authorised technician

Described in document reserved for authorised technicians.

7.5 Diagnostics, reporting and troubleshooting

7.5.1 ELIMINATING SMALL FAULTS

In some cases it is possible to remedy minor problems by referring to the following instructions.

1. **If the program does not start, check that:**

- The dishwasher is connected to the mains.
- There is no power outage.
- The water cock is open.
- The dishwasher door is properly closed.

2. **If water is left inside the dishwasher, check that:**

- The drain hose is not kinked.
- The drain trap is not blocked.

- The dishwasher filters are not clogged.

3. If the load is not properly cleaned, check that:

- The correct amount of detergent has been added.
- The salt container is not empty.
- The tableware has been loaded correctly.
- The selected program is suitable for the type and degree of soiling.
- All filters are clean and correctly installed.
- The spray arm nozzles are not clogged.
- There is nothing obstructing the rotation of the spray arms.
- Check that the salt container cap is properly closed.

4. If the tableware does not dry properly or remains matt, check that:

- The intake filters rinse aid are clean
- The rinse aid container is not empty.
- The rinse aid dispenser setting is correct.
- The detergent used is of good quality and has not lost its effectiveness (for example, through incorrect storage, with the box left open).
- Check that the salt container cap is properly closed.

5. If the tableware is streaky, stained or similar, check that:

- The rinse aid dispenser setting is not too high.

6. If there are traces of rust in the dishwasher:

- The tank is made of stainless steel, and therefore any rust marks are due to external elements (fragments of rust from the water pipes, etc.). Special products are available to remove such marks.
- Check that the detergent dose being used is correct. Certain detergents can be more corrosive than others.
- Check that the salt container cap is properly closed.

If the problem persists after following the troubleshooting instructions above, call the nearest Authorised Service Centre.

7.5.2 Alarms



We list the dishwasher's alarms below, divided into "FATAL" and "NON-FATAL".
- In the first case, ***FATAL ALARMS*** *the control panel displays "****AF****" followed by the alarm code.*
- In the second case, ***NON-FATAL ALARMS****, these are simple warnings and not malfunctions; the message "****A-****" displays, followed by the alarm code.* ***Press Start/Pause to continue using the machine.***



ALARM EVENTS - READ CAREFULLY
When an alarm event occurs, the dishwasher automatically runs a safety shutdown. In such cases, ***the alarm code on the display flashes*** *until automatic handling has terminated:* ***THE MACHINE CANNOT BE RESET when it is in this condition.***
Any RESET forced by the user will not be accepted until the problem has been dealt with and the alarm code on the display is "steady".
When an alarm is reported: Identify the code and its meaning in this table, along with the suggested countermeasures. Apply the countermeasures for the case in question.

The user is typically required to proceed as follows:
1. First execute the ***DEFAULT PROCEDURE.***
2. If the alarm does not cancel itself, execute the ***RESTORE PROCEDURE.***

1. DEFAULT PROCEDURE

	If the alarm event is due to a momentary anomaly, the situation can be resolved as follows: *Turn the machine off and then on again with the **On/Off** button. The display flashes "**OFF**" while the anomaly is being handled automatically. At the end of the process, the "**OFF**" displays steadily.* ***2. RESTORE PROCEDURE** for AF alarms (displayed without flashing):* *1. Run a **RESET.*** *2. If the alarm message disappears after the **RESET**: you can resume normal operation after having turned the machine off and on again with the **On/Off** button.* *3. if the alarm message persists after the **RESET**: turn the machine off and on again with the **On/Off** button and by **disconnecting the power supply** (wait at least 10 seconds before turning it back on again).* *4. If the alarm returns when the machine is turned back on: try the **RESET** again.* ***If the alarm persists even after this RESET procedure**:* ***1. Close the water supply cock.*** ***2. Disconnect the machine from its power supply.*** ***3. Check that the machine is properly hooked up** (water and power) and that the initial installation conditions have not changed.* ***4. Contact Smeg technical service.***

ALARM ID	DESCRIPTION	USER ACTION
AF:01	The water does not heat to temperature in the set time.	User: run the **DEFAULT PROCEDURE** described above. If the alarm does not reset, run the **RESTORE PROCEDURE.**
AF:05	Operating temperature sensor TL1 has generated an anomalous signal (sensor "open").	User: run the **DEFAULT PROCEDURE** described above. If the alarm does not reset, run the **RESTORE PROCEDURE.**
AF:07	Drying temperature sensor TA1 has generated an anomalous signal (sensor "open").	User: run the **DEFAULT PROCEDURE** described above. If the alarm does not reset, run the **RESTORE PROCEDURE.**
AF:09	Partial draining has not succeeded.	User: run the **DEFAULT PROCEDURE** described above. If the alarm does not reset, run the **RESTORE PROCEDURE.**
AF:11	No cold water during the fill cycle.	Check the water supply: 1. Check that the intake cock is open. 2. Check the water supply pressure. 3. Check the position of the intake hoses. Run the **DEFAULT PROCEDURE** described above. If the alarm does not reset, run the **RESTORE PROCEDURE.**
AF:12	No hot water.	Check the hot water supply: 1. Check that the intake cock is open. 2. Check the water supply pressure. 3. Check the position of the intake hoses. Run the **DEFAULT PROCEDURE** described above. If the alarm does not reset, run the **RESTORE PROCEDURE.**
AF:17	Cold water filling time not correct.	Run the checks and procedures specified in AF:11.
AF:18	Hot water filling time too long. The machine is taking too long to fill with hot water.	Run the checks and procedures specified in AF:12.

ALARM ID	DESCRIPTION	USER ACTION
AF:23	Not enough water. Tank water level is dropping.	Run the checks and procedures specified in AF:11. **Also check for leaks** - check for water on the floor around the machine. **If you find any leaks: immediately close all supply cocks and contact technical service.**
AF:25	Water circuit malfunction.	User: run the **DEFAULT PROCEDURE** described above. If the alarm does not reset, run the **RESTORE PROCEDURE.** **Then open the door and check that there is not too much foam in the tank (reduce the amount of rinse aid) and that the tank filter is clean (proceed as shown in fig. 16).**
AF:29	The tank does not drain in the set time.	Check the drain connection, in particular the height of the drain fittings in relation to specifications, and check for kinks and restrictions along the drain hose. Clean filter unit
AF:30	During the cycle, the tank water level exceeds the safety level. Water safety level.	Check the machine's water supply: 1. Supply pressure. 2. Hookup, as specified in this manual. User: run the **DEFAULT PROCEDURE** described above. If the alarm does not reset, run the **RESTORE PROCEDURE.** **If you find any leaks: immediately close all supply cocks and contact technical service.**
AF:32	Stagnant water in the wash chamber when the machine is in stand-by.	User: run the **DEFAULT PROCEDURE** described above. If the alarm does not reset, run the **RESTORE PROCEDURE.** If you find any leaks: immediately close all supply cocks and contact technical service.
AF:33	Anomalous water filling in the steam condenser. No water in the steam condenser.	Indicates that there is no water in the steam condenser when it is expected to be there. Check the water supply: 1. Supply pressure. 2. Hookup, as specified in this manual. 3. Obstructions and restrictions along the hoses. Run the **DEFAULT PROCEDURE** described above. If the alarm does not reset, run the **RESTORE PROCEDURE.**
AF:34	Steam condenser does not drain water.	Check the drain hookup: 1. Height and position of drain fittings 2. Hookup, as specified in this manual. 3. Obstructions and restrictions along the hoses. User: run the **DEFAULT PROCEDURE** described above. If the alarm does not reset, run the **RESTORE PROCEDURE.**
AF:54	Door detected open during cycle. Door interlock fault.	1. Make sure to close the door properly before running a wash cycle. 2. Do not force the door open during a cycle, always use the appliance's controls to pause the cycle and open the door. 3. Make sure there are no objects jammed between the door and the dishwasher chamber which are stopping the door closing. 3. Run the **DEFAULT PROCEDURE** described above. If the alarm does not reset, run the **RESTORE PROCEDURE.**

ALARM ID	DESCRIPTION	USER ACTION
AF:56	Door lock fault, no automatic open.	Make sure to close the door properly before running a wash cycle. Try opening the device again with the **Open door** button. **If necessary, use the manual door release procedure described in this manual.** Run the **DEFAULT PROCEDURE** described above. If the alarm does not reset, run the **RESTORE PROCEDURE.**
A:58	Dryer does not heat up. Only model SWT260X.	User: run the **DEFAULT PROCEDURE** described above. If the alarm does not reset, run the **RESTORE PROCEDURE.**
A:67	Dryer motor cooling cycle fault. This cycle runs after drying to restore the dry load and heating elements to a safe temperature. Only model SWT260X.	User: run the **DEFAULT PROCEDURE** described above. If the alarm does not reset, run the **RESTORE PROCEDURE.**
AF:74	Acquastop device tripped (as applicable).	User: run the **DEFAULT PROCEDURE** described above. If the alarm does not reset, run the **RESTORE PROCEDURE.**
AF:78	*Restore fail*. Motherboard error.	User: run the **DEFAULT PROCEDURE** described above. If the alarm does not reset, run the **RESTORE PROCEDURE.**
AF:84	Dryer temperature higher than setpoint. Only model SWT260X.	Wait for the automatic alarm handling procedure to terminate. **A RESET cycle cannot be run while alarm AF:84 is being handled by the system.** **Do not disconnect power: automatic heating malfunction handling in progress with heating element cooling cycle.** Only when this procedure has terminated may you run the **DEFAULT PROCEDURE** described above.
A:93	Machine maintenance.	The machine has exceeded the set number of hours of operation since installation or its last service: contact technical service for routine maintenance. Press **Start/Pause** to ignore the warning and continue using the machine. Run scheduled service as soon as possible to keep the machine in good working order.
AF:96	Tank water level anomaly.	Check the water intake and drain fittings and that they are compliant with specifications. If you notice any leaks around the appliance, close all water cocks. User: run the **DEFAULT PROCEDURE** described above. If the alarm does not reset, run the **RESTORE PROCEDURE.**

N.B.:
The drying system alarms (A 58, A 67) display at the end of the cycle, and reset when the door is opened.
If the messages persist, contact your local authorised service centre.

8 INDEX

1 PRODUCT IDENTIFICATION AND SAFETY AND OPERATING WARNINGS 1
1.1 Brand and model (or type) 1
1.2 Edition (revision) of user manual 1
1.3 Name and address of manufacturer/distributor 1
1.4 Declaration of conformity to product standards 1
2 PRODUCT CHARACTERISTICS 2
2.1 Application, general functions and intended use 2
2.2 Dimensions, weight and handling instructions - Dimensions in mm. 2
2.3 Technical characteristics (power, plumbing) 4
2.3.1 Electrical connections (see nameplate with the technical data) 4
2.3.2 Plumbing connections 5
2.4 Drain hose connections 5
2.5 Noise 7
2.6 Protection rating (IP) 7
2.7 Environmental conditions (storage and operating) 7
2.8 Safety precautions and instructions 7
3 SYMBOLS 9
4 PREPARING THE APPLIANCE FOR USE 9
4.1 Removing the packaging, inspection 9
4.2 Scrapping the packaging material 9
4.3 Installing the appliance 10
4.4 Preliminary settings and adjustments 10
4.4.1 Opening the door 10
4.4.2 Manual door release 10
4.5 Operator and technician authorisations 11
4.6 Precautions before use 11
4.7 Precautions when the appliance is not in use 11
4.7.1 If the dishwasher is not being used 11
4.7.2 Use after a period of disuse 11
5 OPERATING INFORMATION AND INSTRUCTIONS 12
5.1 Safe use 12
5.2 Using the water softener 12
5.3 Using detergent and rinse aid 13
5.3.1 Correct use of the peristaltic pumps – OPTIONAL 13
5.3.2 Tank level sensors - OPTIONAL 14
5.4 Description of controls and wash programs 15
5.4.1 Controls 15

5.4.2 Detailed description 15
5.5 Indicator light – Meaning 17
5.6 Loading tableware 18
5.6.1 Example loads 18
5.7 Setting the wash program 18
5.7.1 Models SW262 18
5.7.2 Models: SWT262 19
5.7.3 Model SWT260X e SWT260: 20
5.8 Drying cycle 21
5.9 Repeat (as applicable) 21
5.10 End of cycle 21
5.11 Selecting the washing program 22
5.11.1 Perform resins regeneration. 22
5.12 Interrupting a running program 22
5.12.1 Pausing a program 22
5.12.2 Interrupting a program 22
5.13 Reset procedure 23
5.13.1 Running a RESET procedure 23
6 SETUP MODE AND FUNCTIONS 23
6.1 Entering set-up mode 23
6.1.1 Entering the USER menu 23
6.1.2 SET menu 24
6.1.3 Parameter “SET 3“ 25
6.1.4 Cloc menu 25
6.1.5 Coun menu 26
7 CLEANING AND ROUTINE MAINTENANCE 26
7.1 General precautions 26
7.2 Description of maintenance and cleaning by the operator 26
7.2.1 At each use 26
7.2.2 Monthly check 26
7.2.3 Once a year 27
7.3 CLEANING THE APPLIANCE and its parts 27
7.4 Description of maintenance and cleaning by the authorised technician 28
7.5 Diagnostics, reporting and troubleshooting 28
7.5.1 ELIMINATING SMALL FAULTS 28
7.5.2 Alarms 29
8 INDEX 33