metos

COMBI-KETTLE

PROVENO E, S

Tyyppi: 40 l, 60 l, 80 l, 100 l, 150 l, 200 l, 300 l, 400 l

Installation and Operation Manual

Translation of the original instructions



Rev 1.0
(6.11.2017)
From 10.2.2017
4222900, 4222902, 4222904, 4222906, 4222908, 4222910, 4222912, 4222914

TABLE OF CONTENTS

1. General 4
1.1. Symbols used in the manual 4
1.2. Symbols used on the appliance 4
1.3. Checking the relationship of the appliance and the manual 4
2. Safety 5
2.1. General 5
2.2. Construction of the combi-kettle 6
2.3. Changing the settings and adjustments 7
2.4. Safety instructions in the event of malfunction 7
2.5. Disposal of the appliance 7
2.6. Other prohibitions (dangerous methods and procedures) 7
3. Functional description 8
3.1. Intended use of the appliance 8
3.1.1. Use for other purposes 8
3.2. Construction 8
3.3. Operating principle 8
3.4. Display 9
3.4.1. Display when the appliance is in stand-by mode 9
3.4.2. The display elements (basic functions) 10
4. Operating instructions 14
4.1. Before use 14
4.1.1. Positioning the mixing tool and scrapers 14
4.2. Using the kettle 16
4.1.2. Heating 16
4.2.1. Cooling 19
4.2.2. Mixer functions 21
4.2.4. Tilting the kettle 22
4.2.3. Mixing while tilting 22
4.2.5. Water filling 23
4.2.6. Timer ("egg timer") 24
4.2.7. Saved Programs 25
4.2.8. Favorite pages 26
4.3. Programming 27
4.3.1. Programs 28
4.3.2. Mixing cycles 31
4.3.3. Favorite pages 32
4.4. After use 34
4.4.1. Cleaning 34
4.4.2. Periodic service 36
4.4.3. Safety valve test 36
4.5. Troubleshooting 37
4.5.1. Maintenance information 38
5. Adjustment instructions 39
5.1. Changing the settings without logging 39
5.1.1. Fresh water function 39
5.1.2. Memory functions 40
5.1.3. Language 40
5.1.4. Time and date 40

5.1.5. Sounds 40
5.1.6. Safety valve test 40
5.1.7. Version info 40
5.1.8. Use of electricity and water 40
5.2. Changing the settings "master chef" 41
5.2.1. Memory functions 41
5.2.2. Sounds 42
5.2.3. Parameters 42
6. Installation 43
6.1. General 43
6.1.1. Operating conditions 43
6.1.2. Possible interference from the surroundings (to the surroundings) 43
6.1.3. Storage 43
6.1.4. Unpacking the appliance 43
6.1.5. Disposal of the package 44
6.2. Installation 44
6.3. Residual current device recommendation 44
6.4. Installation frames 45
6.4.1. Positioning of installation frames 45
6.4.2. Subsurface frame cast into the floor 46
6.4.3. Surface installation frame fixed to the floor 47
6.4.4. Installing the combi-kettle on the frame 48
6.5. Electrical connections 50
6.5.1. Electrical Connection to Icebank Unit 52
6.5.2. Electrical Connection to Peak Power Regulating Systems 53
6.5.3. Forced Half Power 54
6.6. Water and steam connections 56
6.6.1. Ice bank connections (C3-option) 57
6.6.2. Water connection and quality requirements 57
6.6.3. Extreme water conditions 58
6.6.4. Steam and condensate connections 58
6.7. Ventilation 60
6.8. Other installations 60
6.9. Procedures after installation 60
6.9.1. Adjusting the tilting 60
6.9.2. Fastening the mixer motor cover box 61
6.10. First run and testing 61
6.10.1. Filling the steam generator 61
6.10.2. Safety valve test 61
6.11. Adjustments, programming 62
6.12. Staff training 62
6.13. Combination of machines 62
7. Technical specifications 63
7.1. Dimensions 63
7.2. Floor drain and installation frame positioning 64
7.3. Steam connection 65
7.4. Water connection 65
7.5. Icebank connections (option) 65
7.6. Electrical connections 66

1. General

Carefully read the instructions in this manual as they contain important information regarding proper, efficient and safe installation, use and maintenance of the appliance.

Keep this manual in a safe place for eventual use by other operators of the appliance.

The installation of this appliance must be carried out in accordance with the manufacturer's instructions and following local regulations. The connection of the appliance to the electric, steam and water supply must be carried out by qualified persons only.

Persons using this appliance should be specifically trained in its operation.

Switch off the appliance in the case of failure or malfunction. The periodical function checks requested in the manual must be carried out according to the instructions. Have the appliance serviced by a technically qualified person authorized by the manufacturer and using original spare parts.

Not complying with the above may put the safety of the appliance in danger.

1.1. Symbols used in the manual



This symbol informs about a situation where a safety risk might be at hand. Given instructions are mandatory in order to prevent injury.



This symbol informs about the right way to perform in order to prevent bad results, appliance damage or hazardous situations.



This symbol informs about recommendations and hints that help to get the best performance out of the appliance.

1.2. Symbols used on the appliance



This symbol on a part informs about electrical terminals behind the part. The removal of the part must be carried out by qualified persons only.

1.3. Checking the relationship of the appliance and the manual

The rating plate of the appliance indicates the serial number of the appliance. If the manuals are missing, it is possible to order new ones from the manufacturer or the local representative. When ordering new manuals it is essential to quote the serial number shown on the rating plate.

If language versions have information contradictions, the original language English is the primary language regarding the information content.

2. Safety

2.1. General

The appliance is CE marked, which means that it complies with the requirements of the EU machinery directive with regard to product safety.

Product safety means that the design of the appliance will prevent personal injury or damage to property.

The Proveno combi-kettle has been designed and manufactured in compliance with the Directive regarding safety of Machinery, the Low Voltage Directive, the Directive regarding Electromagnetic Compatibility and the Directive regarding Pressure Equipment currently in force.

The Proveno combi-kettle is a pressurized vessel with a maximum operating pressure of 1 bar (or 0,5 bar for certain markets). Overpressure is prevented by means of both mechanical (safety valve, pressure switch) and electronic control.

The Proveno combi-kettle is provided with water level control, which prevents heating if there is not enough water in the steam generator.



Modifying the equipment without the approval of the manufacturer invalidates the manufacturer's product liability.



To further improve safety during installation, operation and servicing, the operator and the personnel responsible for installing and servicing the appliance should read the safety instructions carefully.



Switch off the appliance immediately in the event of a fault or malfunction. The appliance must only be serviced by trained engineers. The regular checks described in the manual must be carried out in accordance with the instructions. The appliance must be serviced by a person authorized to do so by the manufacturer. Use original spare parts. Dangerous situations may arise if the instructions above are not followed.



Before using the appliance, ensure that personnel are given the necessary training in operating and maintaining the appliance.



Keep this manual in a safe place so that it can be used by other operators of the appliance.

This manual guides the user to use the device safely.



Carefully read the instructions in this manual as they contain important information regarding proper, efficient and safe installation, use and maintenance of the appliance.



The appliance should not be used by anyone suffering from a physical or mental illness or by inexperienced people (including children).



Children should be watched to ensure that they do not play with the appliance.

2.2. Construction of the combi-kettle

The main parts of the combi-kettle are illustrated in the following pictures:



1. Support pillar
2. Safety block
3. Mixer and mixing tool
4. Emptying valve for steam generator
5. Safety lid
6. Safety grid for fi ll opening
7. One-grip tap for cleaning jet
8. Control panel
9. Emergency/stop button
10. Cleaning jet
11. Water fi ll to kettle



Lid

1. Safety lid
2. Lifting arm
3. Locking lever of the lid
4. Safety grid for fi ll opening
5. Safety switch
6. Cover for fi ll opening



Mains switch

1. Mains switch

2.3. Changing the settings and adjustments

Technical adjustments to the appliance must be performed by a qualified and well trained person.

2.4. Safety instructions in the event of malfunction

In case of a serious emergency, all functions of the appliance must be stopped by turning the mains switch to the OFF position. In case the reason for using the stop switch is a serious malfunction jeopardizing safety at work, contact an authorized service provider immediately

2.5. Disposal of the appliance

Once the appliance has reached the end of its useful life, it must be disposed of in compliance with local rules and regulations. The appliance may contain substances/ materials which potentially have an adverse impact on the environment as well as recyclable materials. The best way of dealing with such substances is to dispose of them through a proper waste company

2.6. Other prohibitions (dangerous methods and procedures)

Deliberate disregard of safety devices is prohibited, as it jeopardizes safe work in the kitchen. The manufacturer does not take responsibility for damage caused by deliberate use of a defective appliance, disregard of the safety precautions by modifying the designed operation of the appliance, or neglect of the technical condition, maintenance or service of the appliance.

3. Functional description

3.1. Intended use of the appliance

The Proveno combi-kettle is designed for professional food preparation. Using Proveno for other purposes is prohibited. It is forbidden to put corrosive ingredients or substances reacting with each other in the kettle. Please observe that long-term effect of some substances used in food preparation is corrosive. Such substances are, for example, salt, acetic acid, citric acid and lactic acid.

3.1.1. Use for other purposes

The manufacturer does not take responsibility for functional troubles or damages caused by misuse or use for other purposes than stated above.

3.2. Construction

The construction of the kettle is of stainless steel throughout. The inner bottom and jacket are of acid-proof steel. The kettle is triple-jacketed and thermally insulated throughout.

3.3. Operating principle

The Proveno kettle is heated by steam generated with heating elements. The steam generator and heating elements are located in the lower section of the kettle.

The kettle tilts by means of a tilting motor (40 - 150 -liter kettles). Larger kettles (200 - 400 liters) are equipped with a hydraulic tilting mechanism. The mixing functions are performed by means of a gear motor. Cooling (accessory) is based on cold water circulating inside the kettle's steam jacket. The raised control panel of the appliance is situated on the kettle's right-hand pillar (control pillar).

3.4. Display

3.4.1. Display when the appliance is in stand-by mode

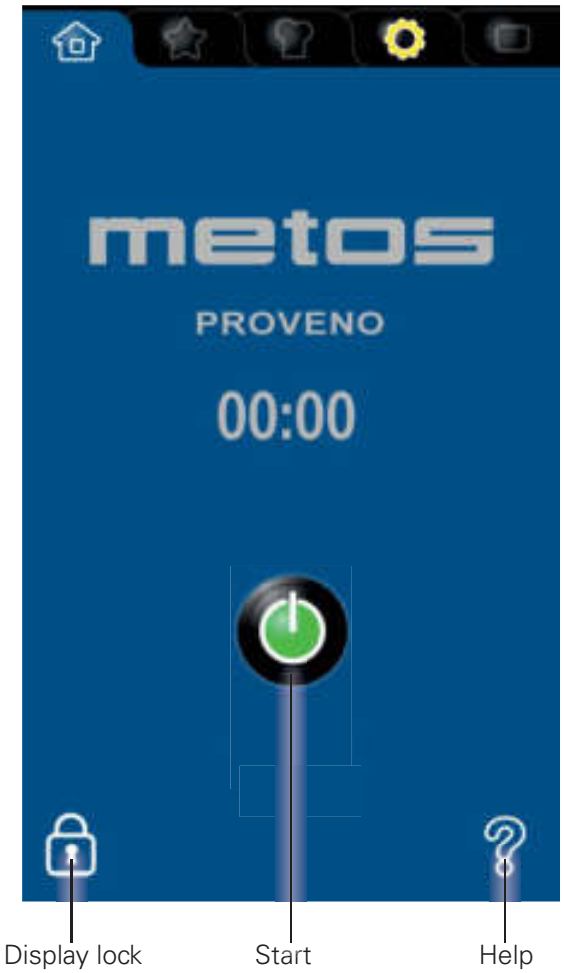

Screen saver. The screen saver is activated when the display has been idle for a set amount of time. The display goes black or starts to show the time or the possible active functions. The display will return to normal operation when touching it.

3.4.2. The display elements (basic functions)

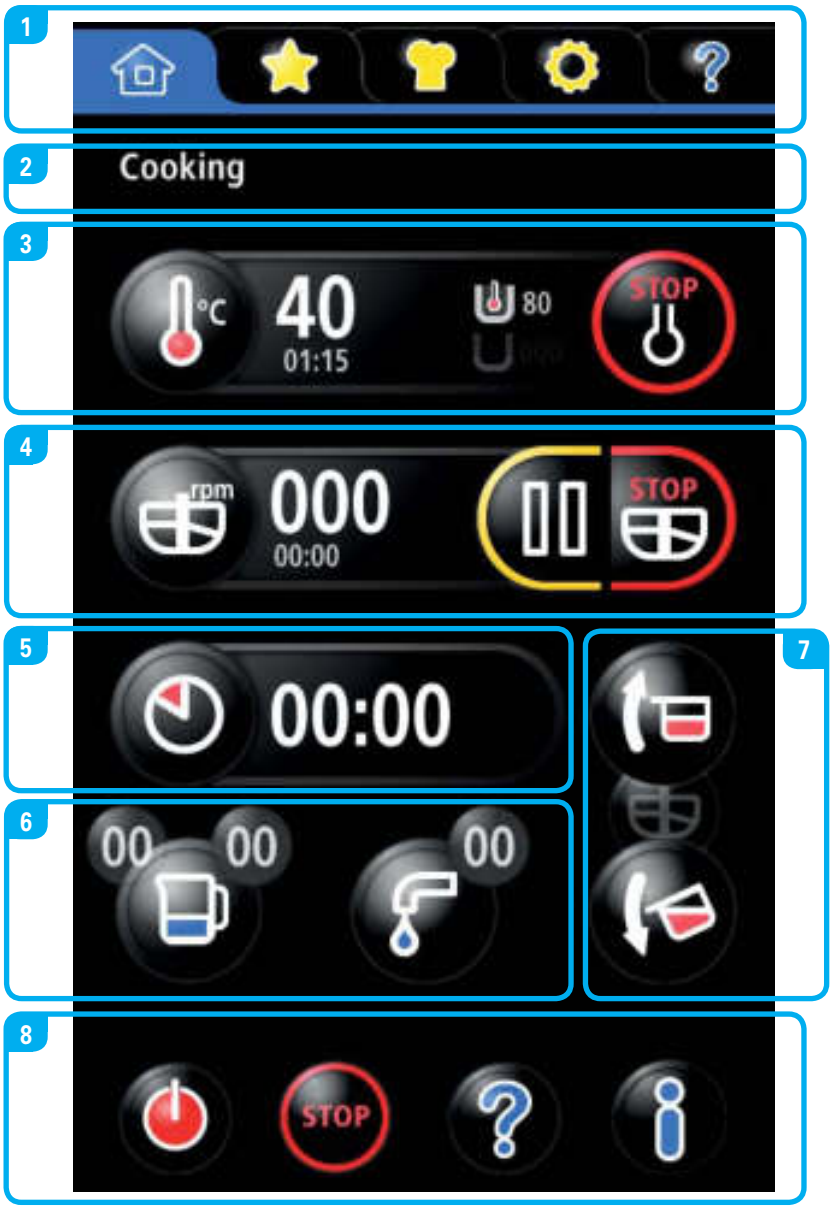

1. Tabs



Homepage Favorites Programs Settings Help

2. Info



3. Temperature functions



4. Mixer functions



The correct way to stop the mixer is to press PAUSE (or STOP ( ), **not by opening the lid.**

5. Timer functions ("egg timer")

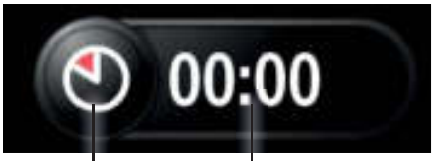

6. Water filling function

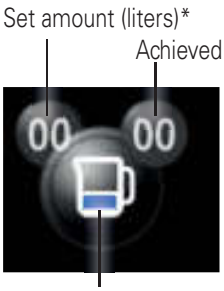

Automatic water filling.

Canceling the automatic water filling*



Manual water filling.

Canceling the manual water filling*

* Only displayed during water filling

7. Bowl tilting functions



Return kettle bowl to upright position (= bowl in cooking position)

Mixing while tilting.

Kettle bowl tilting (= bowl fully tilted)

8. Navigation



ON/OFF Stop Help Info

Other symbols on the display:

Moves to the next program phase (while running a saved program)

Return to previous display

Home. On any page, push the button to go to the main view.

Emptying the jacket

The Hold function (cooling) is active

A program is running

Keypad functions

In connection with various settings, a keypad will appear on the display:

- Push the uppercase button to toggle between lowercase, uppercase and uppercase hold letters. (caps lock).
- Push the backspace button to erase characters.
- Push the special characters button ?123 for numbers and special characters.

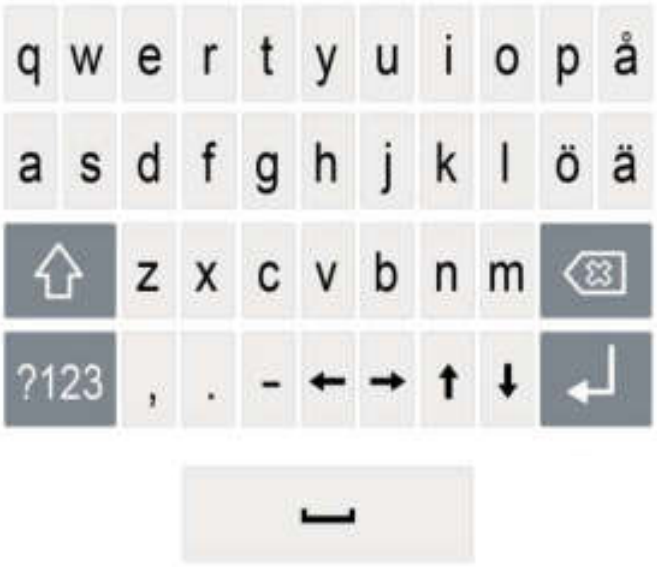

4. Operating instructions

All personnel using the appliance must be given training in how the appliance works by the person responsible for staff safety.

4.1. Before use

Daily checks before use

- Water supply (hot/cold) is open.
- No inappropriate objects in the kettle.
- Scrapers are correctly attached to the mixing tool. See "Positioning the mixing tool and scraper".
- The mixing tool has been locked in its place: locking part (one end of the handle) in the groove of the mixer axle, with the handle turned in a horizontal position. Secure fixing by trying to lift the tool out of the kettle by the upper blade.

4.1.1. Positioning the mixing tool and scrapers

Attach the scrapers by placing the pins on the mixing tool into the holes on the scrapers. After that turn the scraper into place by lifting the scraper's lower part. Finally pull the scraper forward. The bevel (1) will on the lower scraper point upwards and on the side scraper away from the mixer axle.



The mixing tool is equipped with 1-5 scrapers, depending on the size of the tool.



Scraper	40	60	80	100	150	200	300	400
Scraper A2	-	1	1	2	1	2	1	2
Scraper B2	-	-	1	1	1	1	1	1
Scraper C2	1	1	-	-	1	1	2	2

Use scrapers in all cooking modes to increase the efficiency of heat transfer and to help the cleaning of the kettle.



It is easiest to attach the mixing tool to the mixer axle when the kettle is in a tilted position. Push the ring on the mixing tool into the kettle's mixer axle and fit the mixing tool in place, while the lifting handle is straight so that the locking device of the lifting handle sets in the groove at the upper end of the mixer axle.





Then turn the handle aside.



Make sure that the mixing tool is locked in its place by trying to lift/pull it out of its place by pulling at the mixer blade, for example.

4.2. Using the kettle

Switching on

- Activate the display if it is dark by touching it.
  - Check the power supply of the display is not activated. Ensure that the main switch on the kettle back is set in state "1".
- Start the kettle by pressing . The display will show the basic functions.

Switching off

- Put the kettle in stand-by mode by keeping  pressed.

NOTE: ALWAYS put the kettle in stand-by mode before switching off the power!

4.1.2. Heating

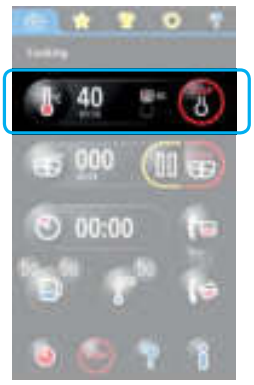



Heating is only switched on when the kettle is in upright position (cooking position). If the heating function is selected when the kettle is not in upright position, the message "Kettle not in cooking position" appears on the display.

-  Press the heating button.
- Set the temperature using the keypad ( ... ) and start the heating by pressing 

 Set the power with the power control.

 **Low power:** The difference between the steam jacket temperature and the food temperature is smaller and the cooking is gentler. Suitable for example for heating milk.
High power: Fastest possible heating

The heating starts, the display shows the set temperature , the selected power level , food temperature  and steam jacket temperature .

When the set temperature is reached, the message "Initial heating completed" appears on the display.

- Mute the possible audio signal by pressing  or confirm by pressing . The message disappears after a while if the display is not touched.

By pressing the "Boil" button  the boil function (100°C) starts automatically regardless of the set temperature.

 The cook intensity can be adjusted with the power control by pressing the desired field .

The heating / cooking is stopped by pressing .

NOTE! Pressing  **stops all kettle functions.**

ADV functions:

Delta-T

The Delta-T function keeps the steam jacket temperature a constant (according to the Delta T value setting) higher than the temperature of the food.

Set the Delta-T value as follows:

-  Press the temperature button.
-  Press the ADV button.
- Activate the Delta-T function by pressing 

.
- Press the food temperature value -> a keypad appears on the display, set the desired temperature.
- Press the Delta-T temperature value -> a keypad appears on the display, set the desired temperature difference.
- Start the heating by pressing .

 The Delta-T function is suitable for dishes that require long braising, such as pulled pork.

Stop the function by pressing .

NOTE! Pressing STOP stops all kettle functions.

Steam jacket temperature

Set the steam jacket temperature as follows:

-  Press the temperature button.
-  Press the ADV button.
- Press 

.
- Press the steam jacket temperature value -> a keypad appears on the display, set the desired temperature
- Start the heating by pressing .

 This function is suitable for example for fermentation of yeast dough or to melt chocolate.

Stop the function by pressing .

NOTE! Pressing STOP stops all kettle functions.

Food / steam jacket temperature

Set the food / steam jacket temperature as follows:

-  Press the temperature button.
-  Press the ADV button.
- Press 

.
- Press the food temperature value -> a keypad appears on the display, set the desired food temperature.
- Press the steam jacket temperature value -> a keypad appears on the display, set the desired steam jacket temperature.
- Start the heating by pressing .

 This function can be used eg for Sous Vide or to simmer porridge.

Stop the function by pressing .

NOTE! Pressing  stops all kettle functions.

4.2.1. Cooling

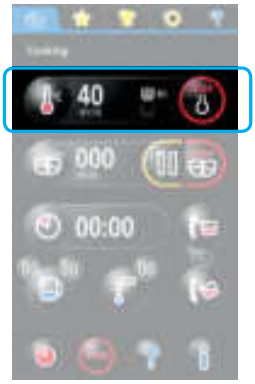

Cooling is only switched on when the kettle is in upright position (cooking position). If the heating function is selected when the kettle is not in upright position, the message "Kettle not in cooking position" appears on the display.

- Press the temperature button.
- Press .
- Select "Hold" or "Finish" function

Hold -function

The "Hold" function keeps the food at the set cooling temperature after the cooling until the user stops the function.

.

When the cooling is completed the kettle jacket is emptied and the remaining emptying time and is shown on the display. The emptying time depends on the kettle size.

- Press the "Hold" button .
- Set the cooling temperature with the keypad.
- Start the cooling by pressing .
- Confirm the cooling by pressing .
- Using the mixer improves the efficiency of the cooling. Start the mixer by pressing . Adjust the mixer speed if needed.
- Exit the mixer view by pressing .

When the set temperature is reached, the message "Target cooling temperature reached" appears on the display.

- Mute the possible audio signal by pressing or confirm by pressing . The message disappears after a while if the display is not touched.

After this, the Hold function will continue until the user stops the function.

- Stop the function by pressing .
  - The kettle jacket is emptied

Do not set a too low cooling temperature! Take into account the cooling medium, for example tap water temperature.
It is advisable to set the cooling temperature 2 degrees warmer than the tap water temperature. To achieve a lower temperature than that is in practice very difficult and may increase the water consumption considerably.

When the cooling is completed the kettle jacket is emptied and the remaining emptying time and is shown on the display. The emptying time depends on the kettle size.

The function can be stopped by pressing .

NOTE! Pressing STOP stops all kettle functions.

Finish -function

The "Finish" -function interrupts the cooling when the set cooling temperature is reached.

- Press the "Finish" button .
- Set the cooling temperature with the keypad.
- KStart the cooling by pressing .
- Confirm the cooling by pressing .
- Using the mixer improves the efficiency of the cooling. Start the mixer by pressing . Adjust the mixer speed if needed.
- Exit the mixer view by pressing .

When the set temperature is reached, the message "Target cooling temperature reached" appears on the display.

- Mute the possible audio signal by pressing  or confirm by pressing . The message disappears after a while if the display is not touched.

Do not set a too low cooling temperature! Take into account the cooling medium, for example tap water temperature.
It is advisable to set the cooling temperature 2 degrees warmer than the tap water temperature. To achieve a lower temperature than that is in practice very difficult and may increase the water consumption considerably.

When the cooling is completed the kettle jacket is emptied and the remaining emptying time and  is shown on the display. The emptying time depends on the kettle size.

The function can be stopped by pressing .

NOTE! Pressing  stops all kettle functions.

4.2.2. Mixer functions

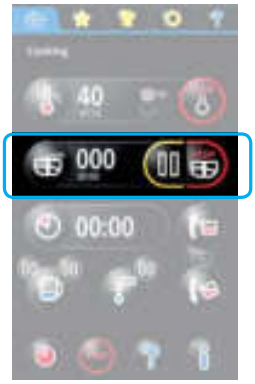

Starting the mixer (manual use)

The mixer can only be switched on when the kettle is in upright position (cooking position). If the mixer function is selected when the kettle is not in upright position, the message "Kettle not in cooking position" appears on the display.

- Press the mixer button.
- Start the mixer by pressing or by touching the power control bar.



Changing the speed

- Adjust speed using the "+" or "-" buttons or by sliding your finger along the rpm slider. The speed control is equipped with a safety delay. (speed increases slowly, the finger must be kept in place until the desired speed is reached).

Auto-reverse function

- When the mixer is running, press , the button will turn blue and the mixer is auto-reversing until the button is pressed again.

Power mixing during mixing

- When the mixer is running, press .

Power mixing is heavy auto-reverse mixing, which continues as long as the button is pressed. Power mixing can be used whenever the mixer is running, also during the pre-set mixing cycles.

Make sure before using power mixing that possible splashes of food do not cause any danger to safety at work.

Preset mixing cycles

- Select one of the mixing cycles shown.
- Start the mixer by pressing .
- Pause the mixing cycle by pressing .
- Stop the mixing cycle by pressing .

Information about mixing cycles, speeds and directions of rotation by pressing .

NOTE! Pressing STOP stops all kettle functions.

The correct way to stop the mixer is to press pause ( ) or STOP ( ), **not by opening the lid of the kettle.**

See also "Programming / Mixing cycles".

4.2.4. Tilting the kettle



It is not possible to tilt the kettle when the lid is closed. In case you try to tilt the kettle with the lid closed, a message appears that the operation could not be performed.

Tilting the Proveno kettle is carried out by pressing the tilting button.

The kettle tilts as long as the button is held down. In case the "pull-back" function is on, (see "Adjustment instructions, Setting customer specific parameters"), a slight reversing movement occurs after the button is released, which decreases dripping of food from the the spout.

To make it possible to empty the kettle completely the reversing movement does not occur when the kettle is tilted to the extreme position.

Returning the kettle to the cooking position is carried out by pressing the upright position button.

For safety reasons (safety regulations), the reversing movement lasts only as long as the button is pressed. The upright position button must be pressed until the reversing movement stops and the kettle is in the cooking position. In case the kettle is not reversed up to the cooking position, a message "Kettle not in cooking position" appears on the display when you try to switch the heating or mixing on.

4.2.3. Mixing while tilting

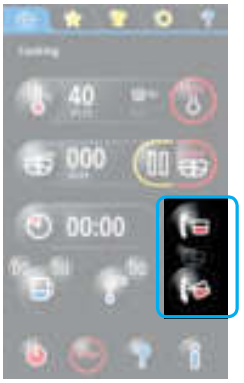

This option enables forced mixing at the lowest mixing speed while the kettle is tilted. With the help of this function it is possible to portion more homogeneous batches of food into smaller bowls.

This function is activated only if the pot is slightly tilted.

- Tilt the kettle by pressing .
- Press the mixer button between the tilting buttons .

The display shows "Start mixing and tilting?".

- Press and then press the mixer button between the tilting buttons and **keep it pressed**, the mixer will work as long as the button is pressed. If you need to adjust the tilting of the kettle, slide your finger to the or button (without lifting your finger).



Foot switch (option)

Follow the instructions above to the point that tells to keep the mixer button between the tilting buttons pressed.

- By keeping the foot switch pressed it is possible to lift the finger from the display without the mixer stopping. The foot switch has to be kept in the middle position, if it is pressed all the way down the function stops.
- The tilting can be adjusted during mixing by pressing or (without lifting your foot from the foot switch). If you place your finger on the mixer button between the tilting buttons the foot switch can be released without the mixer stopping.

4.2.5. Water filling

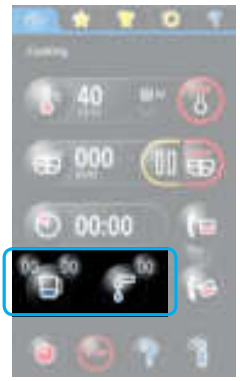

Automatic water filling

- Press .
- Set the desired amount (liters) with the keypad.
- Start the water filling by pressing .
- The display shows the set amount (liters)  and the achieved amount (liters) .
- When the set amount is reached the filling stops automatically.
- On the water filling page the last filled amount is displayed  as well as the total amount  (can be reset)

Interrupting the automatic water filling.

- Interrupt the function by pressing , the button is visible only during automatic water filling.

The filling can be continued as long as the filled amount () is shown on the display.
After this the amount resets and must be set again.

Manual water filling.

- Start the water filling by pressing . The display shows the achieved amount (liters) .
- Press  when the desired water amount is achieved. The button is visible only during manual water filling.

The default setting for the water filling accuracy is full liters. It can however, by setting the parameters, be set to deciliters for amounts smaller then 10 liters. The setting is done by authorized service personnel.

4.2.6. Timer ("egg timer")



- Press .
- Add new timer by pressing .
- Set the time with the keypad.
- Start the timer by pressing .

When the set time has elapsed, a message "Timer expired!" appears on the screen,

Mute the possible audio signal by pressing  or confirm by pressing . The message disappears after a while if the display is not touched.

The active function, e.g. heating is shown on the timer display.

- Example: 

The function can be added to the timer by keeping the symbol pressed until it gets bigger and gets a blue background. It can then be dragged onto the timer. In this way the function stops when the set time has elapsed.

- Example: 

 It is also possible to start several timers at the same time. Add a new timer as described above. Various timer functions can be controlled as above by holding a function symbol pressed until it gets bigger and gets a blue background wherein it can be dragged onto the timer.

Example:



 Several functions can be placed in the same timer wherein all these functions ends when the set time has expired.

Example:



A running timer can be deleted by pressing the timer field (left of the time) and keeping pressed until the timer gets smaller and floating. The timer can now be deleted by dragging it to the waste bin  that appears at the bottom of the page. A function can be deleted from a timer the same way. Keep the function icon pressed until it gets smaller and floating and drag it to the waste bin.

The kettle is also equipped with a timer with which you can program a program to start at a certain time. See "Saved Programs / Timer-set start of the program.

4.2.7. Saved Programs





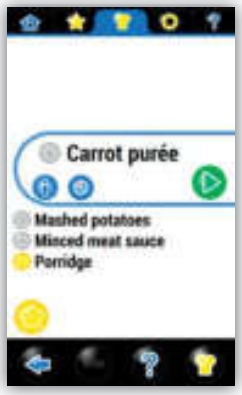

Using a saved program

- Press .
- Select "Programs" and press .
- Select program by scrolling with your finger.
- Start the desired program by pressing .
  - A symbol appears on the display together with (example) 1/2 meaning that first phase of a program with two phases is running.
  - When the program is ready "Program completed" is shown on the display together with "Waited" (passed time), that tells how much time has passed since the program ended.
- Confirm by pressing .

When the program changes from one phase to the following the kettle can, depending on the programming, ask the user to perform actions before the next program phase starts

By pressing the kettle moves to the next program phase.

An ongoing program phase can be extended as follows:

- Press .
- Press and keep pressed shown on the program phase timing bar until it gets bigger
- Increase or decrease the phase length (time) by moving up or down

Other changes to the program, see "Programming".

Extending the program phase after the phase has ended:

If the check point between the phases require confirmation before moving on to the next phase it is possible to continue the ended phase if needed:

When the program phase ends a message appears on the display showing the possible info text, the time that has passed since the phase ended as well as two buttons ("+1:00" and "+5:00") and .

- By pressing ("+1:00" or "+5:00") the previous phase continues for one or five minutes.
- By pressing the program moves on to the next phase.

Timed start of a program



A program can be programmed to start at a later point:

- Press .
- Select "Program".
- Select the desired program and press .
- Set the desired date and time for the program using the keypad on the display.
- Confirm the setting by pressing .

The display shows the time remaining until the program starts as well as the selected program.

- By pressing  the set start time can be changed.
- By pressing  an overview is shown on the display.
- By pressing  the timed start is deleted.

The timed start can be programmed during cooling

1. Switch on the cooling in HOLD mode (see "Cooling)
2. While the cooling is running, set a timed start for the program as above
   - The kettle now keeps the food cold until the the scheduled cooking program starts

4.2.8. Favorite pages



How to use the favorite pages:

- Press , the first favorite page with the programs is shown on the display. A favorite page shows the programs linked to it and the following functions for each program:
  - , shows an overview of the program
  - , opens a timer that allows a delayed start of the program to be set, see "Timed start of a program." If the icon is gray a program already active.
  - , starts the program.

If there are more than one favorite page, move to the next / previous page with the help of the arrows at the top of the display.

4.3. Programming



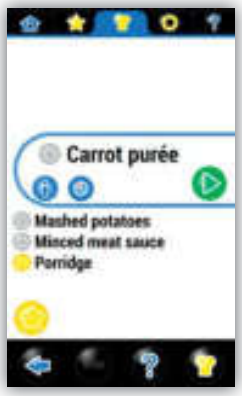

Requires logging (Default log in code for Master chef is "1234". The code can be changed with the parameters, see "Adjustment instructions".)

- Press .
- Select "Programs", press .

A page with the programs is shown on the display.

The following functions are displayed on the page (as logged in):

-  Shows an overview of the selected program.
-  Opens the timer page where a timed start of the selected program can be set.
-  Starts the selected program.
-  Deletes the selected program.
-  Adds the selected program to a favorite page, see "Favorite pages".
-  Makes a copy of the selected program.
-  Opens the selected program for editing.
-  Creates a new program.

4.3.1. Programs



Creating a new program:

- Press .
- Select "Programs", press .
- Press .
- A keypad appears on the display, name the program.
- Save the name by pressing .



The temperature and the time for the program phase:

- Press .
- Select one of the following:
  - heating .
  - neutral (no heating)  (if only mixing is required in the phase).
  - cooling .

If **heating** is selected the display will show a window where the temperature for the phase can be set.

- Set the temperature with the numeric keypad.
- Confirm the setting by pressing .

After this the display will show a window where the duration of the phase can be set.

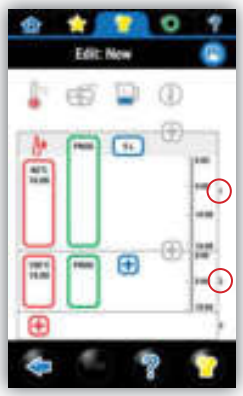

- Set the duration of the phase **h, min** and **s** with the numeric keypad.
- Select whether you want the timer to start
  - **immediately** (Start timer immediately) default setting for temperatures over 100°C (example (2))
  - **after reaching cooking temperature.** (Start timer after reaching cooking temperature) default setting for temperatures below 100°C (example (1))
- Confirm the settings by pressing .

If **neutral** is selected the display will show a window where the duration of the phase can be set

- Set the duration of the phase **h, min** and **s** with the numeric keypad.
- Confirm the setting by pressing .

If **cooling** is selected the display will show a window where the desired end temperature can be set.

- Set the desired end temperature with the numeric keypad.

The mixer function of the phase:

- Press .
- The display will show a window where the mixer function for the phase can be set either by selecting one of the mixing cycles shown or by setting the speed by touching the power control bar.
- The direction of rotation, see "Programming / Mixing cycles".
- Confirm the setting by pressing .

The water filling of the phase:

- Press .
- The display will show a window where the desired amount of water can be set (liters) with the numeric keypad .
- Confirm the setting by pressing .



Additional settings for the program phase:

In addition to the above mentioned functions it is possible to provide additional information for the phase:

- Press .

Text field:

- Press , a keypad appears on the screen. Write a free-form explanation / instructions for the program phase.

Audio signal:

- Select, if desired, the audio signal that sounds when the phase has elapsed by pressing . Select the desired sound from the list. Listen to the sound by pressing . Select the desired sound by pressing . Remove a selected sound by pressing "No sound" .

Before moving to next phase

- Select "Hold conditions and wait until user clicks OK button" if moving to the next phase requires action or confirmation from the user.
- By selecting "Kettle moves to next phase automatically without waiting" the program proceeds automatically to the next phase without confirmation.
- Confirm the settings by pressing .

Adding a program phase:

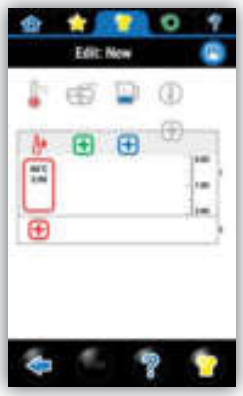

- Press  and follow the instructions from "The temperature and the time for the program phase " onward.

Changing the order of the program phases and deleting a program phase

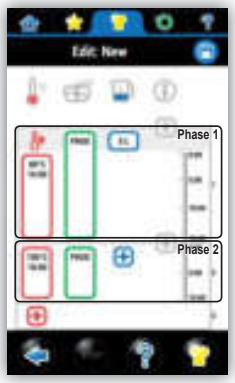

- It is possible to change the order of the program phases by pressing a phase and keeping it pressed. When the phase gets "floating" it can be dragged up and down. The program phase can also be deleted at this point by dragging it onto the waste bin  that appears on the top of the display.

Saving the program:

- Finally remember to save the program / changes by pressing .



The chef recommends to save also during programming

4.3.2. Mixing cycles



Creating a new mixing cycle

- Press .
- Select "Mixing cycles" and press .
- Add a new mixing cycle by pressing .
- Press the "New mixing cycle" field at the top of the display
- Name the mixing cycle with the keypad that appears on the display.
- Save the name by pressing .



The direction of rotation

- Select direction of rotation by pressing . The direction changes at each pressing as follows:
  - Clockwise 
  - Counterclockwise 
  - Auto-reverse function 

Mixer speed

- Set the mixer speed by pressing the "**rpm**" -field (). Set the speed with the keypad that appears on the display.
- NOTE. If you select  the duration of the rotation directions can also be set.
  -  Set how long the mixer rotates clockwise by touching the upper figure and setting the time with the keypad that appears on the display. Next set how long the mixer rotates counterclockwise by touching the lower figure and setting the time with the keypad that appears on the display.
- Save by pressing .
- Return without saving .

The duration of mixing cycle

- Set the duration by pressing the "**h:min:s**" field.
  - Set the time with the keypad that appears on the display.
- Save by pressing .
- Return without saving .

The duration of the phase is not relevant if the cycle has only one step.

The mixing cycle can consist of several phases. Create a new phase by pressing  and setting the direction of rotation and speed as above.



Changing the order of the cycle phases and deleting a cycle phase

It is possible to change the order of the cycle phases by pressing a phase and keeping it pressed. When the phase gets "floating" it can be dragged up and down. The cycle phase can also be deleted at this point by dragging it onto the waste bin that appears on the top of the display.

- Finally save the program / changes by pressing .

4.3.3. Favorite pages



The programs can be linked to favorite pages for example by category.

Creating a new favorite page:

- Press .
- Select "Favorite pages" and press .
- Add new favorite page by pressing .
- Name the page with the keypad that appears on the display.
- Save the page by pressing .
- Return without saving by pressing .

Changing the name of a favorite page:

- Press .
- Select "Favorite pages" and press .
- Pres of the favorite page.
- Change the name with the keypad that appears on the display.
- Save the page by pressing .
- Return without saving by pressing .

Deleting a favorite page:

Delete a favorite page as follows

- Press .
- Select "Favorite pages" and press .
- Press and keep pressed the name of the page to be deleted.
- A waste bin  appears on the bottom of the page.
- Drag the page to be deleted onto the waste bin.

Adding a program to a favorite page:

- Press .
- Select "Programs" and press .
- Select program.

If the program is not linked to a favorite page the favorite symbol in front of the program name is gray .
If the program is linked to a favorite page the favorite symbol in front of the program name is yellow .

- Press the  at the bottom of the page.
- Select to which favorite page you want to link the program by pressing the  of the favorite page (pages). The program can be linked to more than one favorite page.
- Return to the program list by pressing .
- The favorite symbol of the program is now yellow  indicating that the program is linked to one or more favorite pages.
- Return without saving by pressing .

4.4. After use

4.4.1. Cleaning

Use of a pressure washer is forbidden. Pressure washers generate huge amounts of water fog that might contribute to contamination of food and food handling surfaces over large areas in the kitchen.

Switch off the appliance with the (I/0) switch or the mains switch before starting to wash the kettle.

Tools not allowed for cleaning:

- pressure washer
- all metallic tools
- rough rubbing sponges
- steel wool
- abrasive detergents

Tools recommended for cleaning::

- special detergents for stainless steel
- nylon brush
- soft rubbing sponges
- other materials intended for stainless steel that do not scratch the surface

All accessories, such as strainer plates and its parts, mixing tools and scrapers and parts of the safety lid can be washed in a dishwasher suitable for washing such items.

The less the kettle surface gets scratched, the easier it is to clean. The fastest and easiest method is to clean the kettle every time right after use. Do not spray water on the control panel. Clean the pillars of the appliance by wiping.

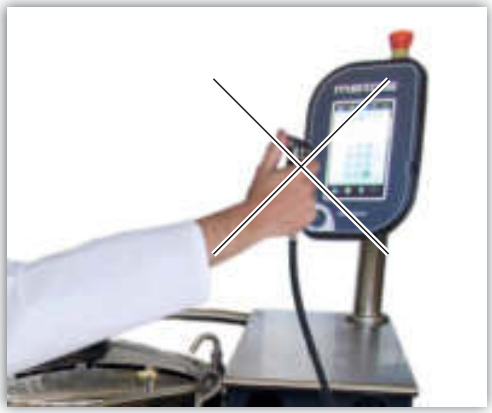

Wash the exterior of the appliance with running water only if necessary. Wiping with a damp cloth will often suffice. Consider the requirements of food hygiene when cleaning the kettle. Abundant use of water for soaking increases water consumption. However, if you want to clean the kettle by soaking, make use of the mixer and the optional washing tool to make soaking more efficient, mixing slowly during soaking.

Cleaning procedures:

- Scrape loose dirt with a plastic scraper
- Spray detergent into the kettle, then brush and spray the kettle with water until clean.
- Dry the kettle.

The dosing and impact time instructions for cleaning detergents must be followed - e.g. exceeding the impact time for foam cleaning detergents in combination with salt residues has been observed to cause severe spot corrosion even on stainless steel.

The manufacturer does not take any responsibility for possible damage caused by not following the instructions.

Detaching the lid parts

- Make sure the kettle is in an upright position.
- Place the lid on the kettle.
- Remove the cover of the safety grid and detach the safety grid.
- Detach the solid lid from the lifting arm by pulling at the locking lever of the lid.



Refitting the lid parts

Place the solid lid on the kettle approximately in the correct position.

Pull the lifting arm down over the lid. Turn the solid lid so that the guiding pin lines up with the hole in the lifting arm center piece.

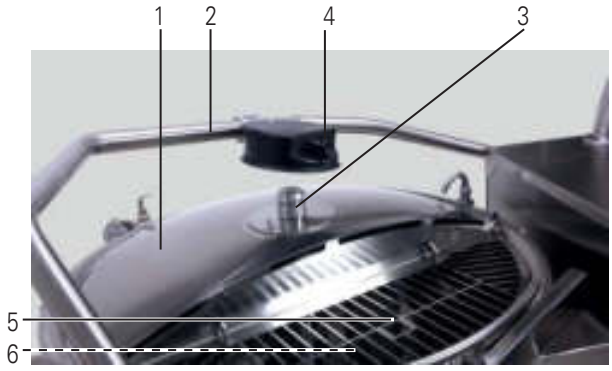

1. Solid lid
2. Lifting arm
3. Guiding pin
4. Locking lever of the lid
5. Safety grid for lid opening
6. Cover for fill opening

Press the lid arm against the lid so that the fixing cone is guided into the fixing part and the locking lever snaps in the locked position. Make sure that the lid is locked on the arm.



Put the safety grid and its cover in place.

4.4.2. Periodic service

Like a car, a food preparation appliance should be kept in good working order with the help of preventive maintenance. This guarantees trouble-free and safe operation of the appliance. Depending on how much the kettle is used and in what kind of conditions it is operated, the technical condition of the Proveno combi-kettle should be checked according to plan from time to time. For example, the amount of scale built up on the steam system depends on the use of the kettle and the hardness of local water. Contact your authorized service provider for recommendations on preventative maintenance to be performed.

4.4.3. Safety valve test

The kettle notifies when it is time to perform safety valve test.



Electrically heated kettle

- Open the safety valve test page by pressing .
  - Continue without performing the test  (not recommended).
  - Mute the possible audio signal by pressing .
- Start the test by pressing . the kettle heats up.
- When the kettle is warm  is shown. Hold the button pressed until the safety valve opens.



It is not allowed to stand behind the kettle during the safety block check, because, when the check is completed, the safety valve at the kettle's rear edge opens, blowing hot steam out of the kettle. The kettle must be clean and empty. The test causes a momentary strong hissing sound. Wear hearing protection



The kettle gives an alarm signal and interrupts the test if the safety valve does not open within acceptable limits. In this case, it is strictly prohibited to continue using at the kettle, and you should immediately contact a qualified Metos service to fix the error.

Steam heated kettle

- Open the safety valve test page by pressing .
  - Continue without performing the test  (not recommended).
  - Mute the possible audio signal by pressing .
- Open the safety valve by slowly by turning the knob in the direction of the arrow.
- When the steam is discharging (sound, pressure gauge reading reduces) allow the knob to return to the start position.



- Confirm the safety valve test is done by pressing .

It is not allowed to stand behind the kettle during the safety block check, because, when the check is completed, the safety valve at the kettle's rear edge opens, blowing hot steam out of the kettle. The kettle must be clean and empty. The test causes a momentary strong hissing sound. Wear hearing protection

4.5. Troubleshooting

The display is not lit

- The kettle is in stand-by mode. Touch the display.
- The emergency/stop button is pushed. Release the emergency-stop switch by turning it clockwise.
- The mains switch is in the "0" position. Turn it to "1" position.

The kettle informs that there is a problem with the water supply

- Check the water supply and open and open possible cutoff valve.

The kettle does not heat up

- The kettle is not in upright (cooking) position. Return the kettle to upright position.
- The draining of the jacket water is in progress. Wait until draining the delay has elapsed and then try again.
- The jacket is not empty after a cooling on a kettle with pneumatic draining of the jacket. Check the compressed air supply and open possible cutoff valve.
- Steam supply problems on a steam heated kettle. Check the steam supply and pressure.

The mixer does not start

- The kettle is not in upright (cooking) position. Return the kettle to upright position.
- The lid is open. Close the lid.
- The safety grid is not in correct position. Check the safety lid.

The cooling does not work

- The kettle is not in upright (cooking) position. Return the kettle to upright position.
- Jacket filling problems. Check the water supply (tap water cooling) or the ice bank connections (ice water cooling)

Resetting the unit

- Turn the main power switch to position 0 and wait for about 1 minute. Turn the main power switch to 1 position.

4.5.1. Maintenance information

Keep a record of all service and repair measures carried out for the Proveno combi-kettle during its life cycle. Service history may speed up future service measures, help in controlling the costs and in planning new investments. The safety valve must be periodically checked as instructed in this manual. Enter the check data in the "Maintenance information" table.

Maintenance information

Combi-kettle_____ Serial No._____ Taken into use (date) _____

Checking the safety valve four times per year:

Date	Checked by	Notes	Date	Checked by	Notes

Yearly maintenance:

Date	Checked by	Notes	Date	Checked by	Notes

Descaling:

Date	Checked by	Notes	Date	Checked by	Notes

5. Adjustment instructions

5.1. Changing the settings without logging

Press .

The following settings can be altered without logging:

- Fresh water function
- Memory functions (HACCP)
- Language
- Time and date
- Sounds (only the volume can be set without logging)
- Safety valve test
- Version info
- Use of electricity and water

Scroll through the options by scrolling the page with your finger.

Confirm the selected option by pressing .

Cancel the selection by pressing .

5.1.1. Fresh water function

Fresh water function rinses the water pipes when the kettle has not been used for a certain time. The function rinses stagnant water and any deposits from the pipes. The Fresh Water Function page shows when the function was performed the last time.

Set the duration of the fresh water function (30 ... 600 s)

- Press the current setting
- Set a new value with the key pad
- Save the changes by pressing .
- Return without saving by pressing .

Set the function interval (0 ... 24)

- Press the current setting
- Set a new value with the key pad
- Save the changes by pressing .
- Return without saving by pressing .

Manual operation of the function

- Start stop the function manually by pressing  and .
- Return without performing the function by pressing .

5.1.2. Memory functions

This function allows the HACCP log file to be stored on a USB memory stick.

- Connect the USB stick to the USB port and press .
- Return without performing the function by pressing .

5.1.3. Language

The language page shows the available language choices.

- Select the desired language by pressing the language bar
- Return without performing the function by pressing .

5.1.4. Time and date

Set the time and date:

- Set the time and date by pressing the fields and setting the corresponding values with the keypad.
- Save the changes by pressing .
- Return without saving by pressing .

5.1.5. Sounds

This feature allows you to adjust the volume. Other sound settings require a login.

- Adjust the volume by sliding your finger across the volume bar 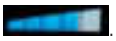.
- Return without performing the function by pressing .

5.1.6. Safety valve test

With this function the safety valve test can be performed.

- Preform the safety valve test by pressing .
- Return without performing the function by pressing .

5.1.7. Version info

This functions shows information that a service technician might ask for when a service call is made.

5.1.8. Use of electricity and water

This function allows you to check the electricity (electrically heated kettle) and water use
The function does not measure the water used with the hand-held shower.

5.2. Changing the settings "master chef"

Press .

The following settings can be modified when logged in as "Master chef". Default log in code for Master chef is "1234" and it can be changed with the parameters.

- Fresh water function (see " Changing the settings without logging")
- Memory functions
- Language (see " Changing the settings without logging")
- Time and date (see " Changing the settings without logging")
- Sounds
- Parameters
- Safety valve test (see " Changing the settings without logging")
- Version info (see " Changing the settings without logging")
- Use of electricity and water (see " Changing the settings without logging")

Scroll through the options by scrolling the page with your finger.

Confirm the selected option by pressing .

Cancel the selection by pressing .

5.2.1. Memory functions

With this function the following memory functions can be carried out:

Save cookbook to USB

- Connect the USB stick to the USB port and press .
- Return without performing the function by pressing .

Load the cookbook from USB

- Connect the USB stick to the USB port and press .
- Select which programs you want to download from the USB stick (=selected,  = not selected.
- Press . If there already is a program with the same name in the kettles memory, a number is added after program name, for example "Meatballs (2)".
- Return without performing the function by pressing .

Save HACCP to USB

- Connect the USB stick to the USB port and press .
- Return without performing the function by pressing .

5.2.2. Sounds

With this function, you can select the audio signal for the different function as well as set the volume.

- Adjust the volume by sliding your finger across the volume bar 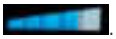.
- Select the audio signal by pressing the audio button for the desired function, if no sound is selected the button is labeled "no sound".
- Listen to the sound by pressing .
- Select the sound by pressing .
- Return without performing the function by pressing .

5.2.3. Parameters

Some of the features can be changed by parameters. You have to log in as "Master chef" to change the parameters.

Each parameter has the following features:



104: Parameter number

Master chef login time out: Parameter description,.

15s - 36000s (600s): Minimum value - maximum value (factory setting).

600s: The parameters current value

To change a numeric parameter value, click on it.
-> set a value for the parameter with the keypad that appears on the display:

Clicking a non numeric parameter does not show a keyboard, but simply toggles the parameter to next value, like:

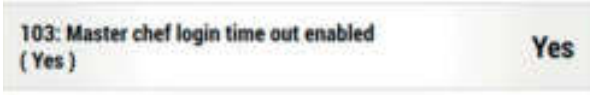

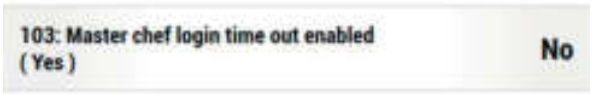

6. Installation

6.1. General



Please observe the instructions given in this chapter concerning the installation and adjustments that must be done before taking the Proveno combi-kettle into use. Strict observance of the instructions prevents malfunctions and damages potentially caused by defective installation.

Do not switch the power on if the installation place is damp or wet (building site conditions).

6.1.1. Operating conditions

The Proveno combi-kettle can be used in a normal, air-conditioned professional kitchen. The room temperature of the installation place must not exceed +40°C and the relative humidity must be less than 80% (condensation on surfaces not allowed to occur). If the temperature of the facility in winter conditions is below 0°C, the steam generator of the combi-kettle must be drained and the kettle must be emptied to avoid damage caused by freezing. The kettle's pipes and solenoid valve bodies must be emptied at the same time.

6.1.2. Possible interference from the surroundings (to the surroundings)

The Proveno combi-kettle fulfils the requirements of the EMC directive concerning the emissions and immunity to electromagnetic disturbances. In case there are electronically controlled appliances and, in particular, devices fitted with a frequency converter in the installation place, it is recommended to ensure their conformity with the relevant regulations and that their cabling has been done according to instructions.

6.1.3. Storage

The Proveno combi-kettle must be stored in a dry place, at a temperature between +10 and +40°C. The kettle should be kept in its transport package during storage.



If the appliance is stored in construction site conditions, special care must be taken not to damage it through other operations on the site.

- Protect the exterior of the combi-kettle from scratches and knocks.
- Protect the combi-kettle from construction site dust.
- **Protect the combi-kettle from sparks produced by welding, grinding and abrasive cutting wheels. These can later cause rust spots on the stainless steel surface of the appliance.**

6.1.4. Unpacking the appliance

The combi-kettle should be transported in its own package as close as possible to the installation place before final unpacking. Do not remove the protective film until after installation, just before the first use of the kettle.



After removing from the transport pallet, the combi-kettle is not stable until it has been bolted down to the installation frame. It is strictly forbidden to operate or tilt the kettle before it has been fixed to the floor according to the installation instructions. When the combi-kettle is removed from its transport pallet, it must be supported to prevent it from falling before it is fixed to the floor. If the kettle falls down, this may cause injury to people or damage to property.

6.1.5. Disposal of the package

After unpacking all packing material must be sorted and disposed of in accordance with local recycling regulations.

6.2. Installation

Check before installation from the installation drawing that there is enough space behind the kettle for tilting and servicing. Also check the location of the floor drain.



The Proveno combi-kettle is designed for installation in a place with a floor drain in front of the kettle. The arrangement with a pouring channel and floor drain behind the kettle is not suitable for use with the combi-kettle

The combi-kettle can be installed in two different ways:

- On a subsurface installation frame, the frame cast into the floor.
- On a surface installation frame, the frame fixed to the floor surface.



For kettles size 200 - 400 l a subsurface frame installation is recommended.



Fixing the kettle directly to the floor without frames is forbidden.

Either subsurface frames or surface frames must be in position before the installation of the combi-kettle is started.

Installation dimensions and floor drain placement, see "Technical specifications"

6.3. Residual current device recommendation

- Electrically and steam heated 40 - 300 liters kettles with mixer: Type A residual current device with high frequency filtering or a residual current device separately approved for use with frequency converters. If a 300 liters kettle is equipped with a three-phase frequency converter (option) a residual current device of type B has to be used
- Electrically and steam heated 400 liters kettles with mixer: Type B three-phase residual current device or a residual current device separately approved for use with frequency converters

6.4. Installation frames

6.4.1. Positioning of installation frames

Combined kettles

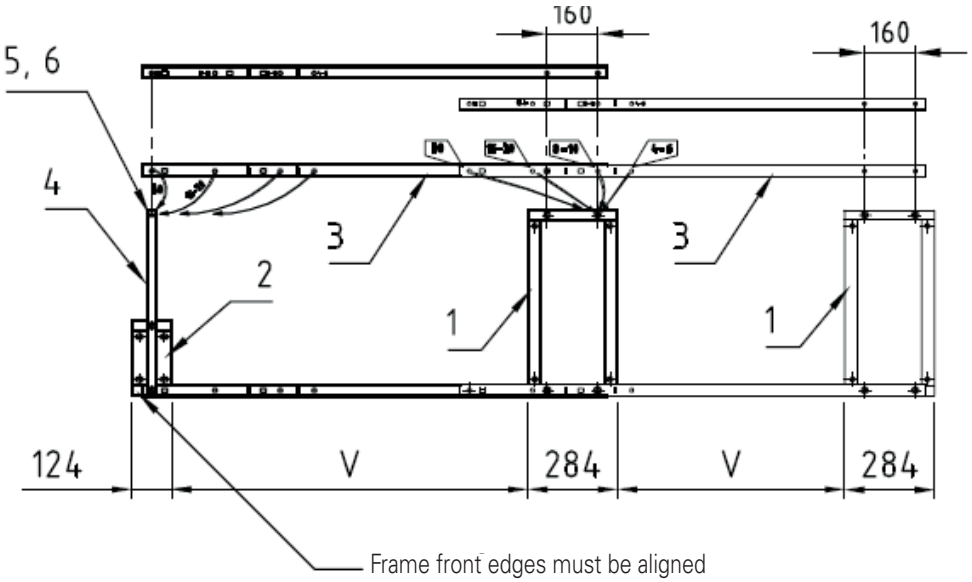

Single kettle

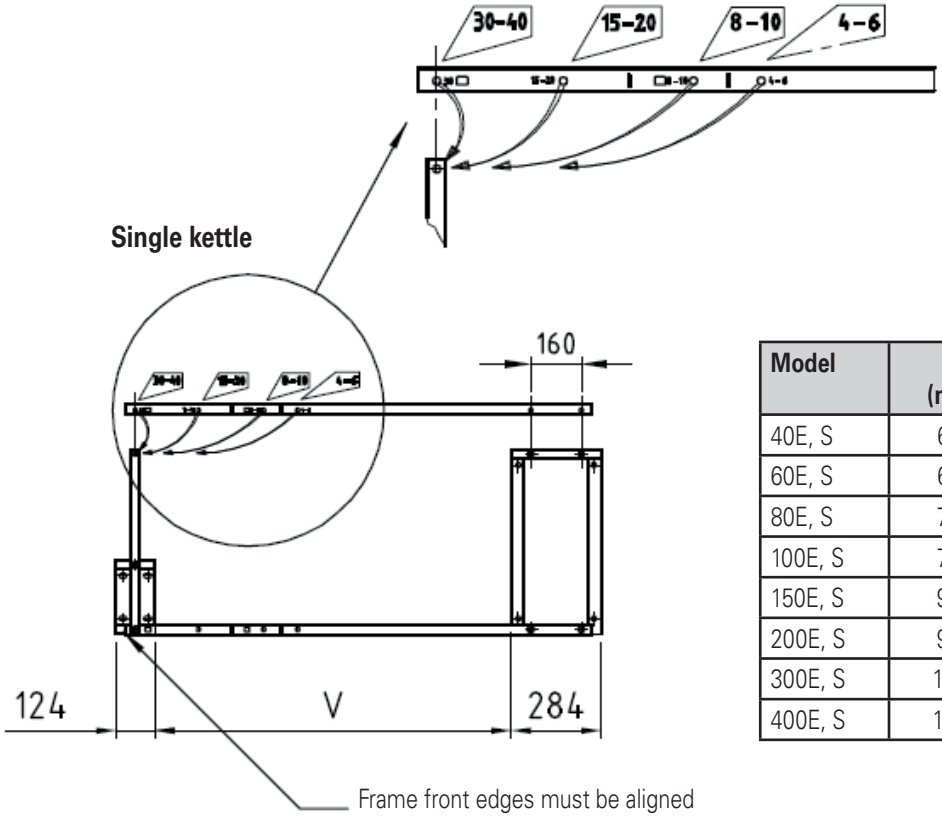

Model	V (mm)
40E, S	613
60E, S	613
80E, S	720
100E, S	720
150E, S	926
200E, S	926
300E, S	1126
400E, S	1126

1. Control pillar frame
   Subsurface 3604544
   Surface 3604545
2. Support pillar frame
   Subsurface 4215233
   Surface 4215231
3. Installation guide 3601113
4. Spacer guide 3604144
5. Hex bolt M12 x 25
6. Hex nut M12

6.4.2. Subsurface frame cast into the floor

Installation frames are mounted according to the installation drawing, with the help of distance guides supplied with the delivery. The frames must be installed in a horizontal position and fixed so that they do not move during casting. The installation frames must be positioned so that their upper surface is 30 mm above the finished floor surface. The junction of the installation frame and floor is filled with flooring material or silicone mastic. To achieve the best result regarding tightness, the installation frame should be filled up to the top level e.g. with acrylic filler **after the installation**. The main points concerning the installation of the subsurface frame are shown in the picture below.

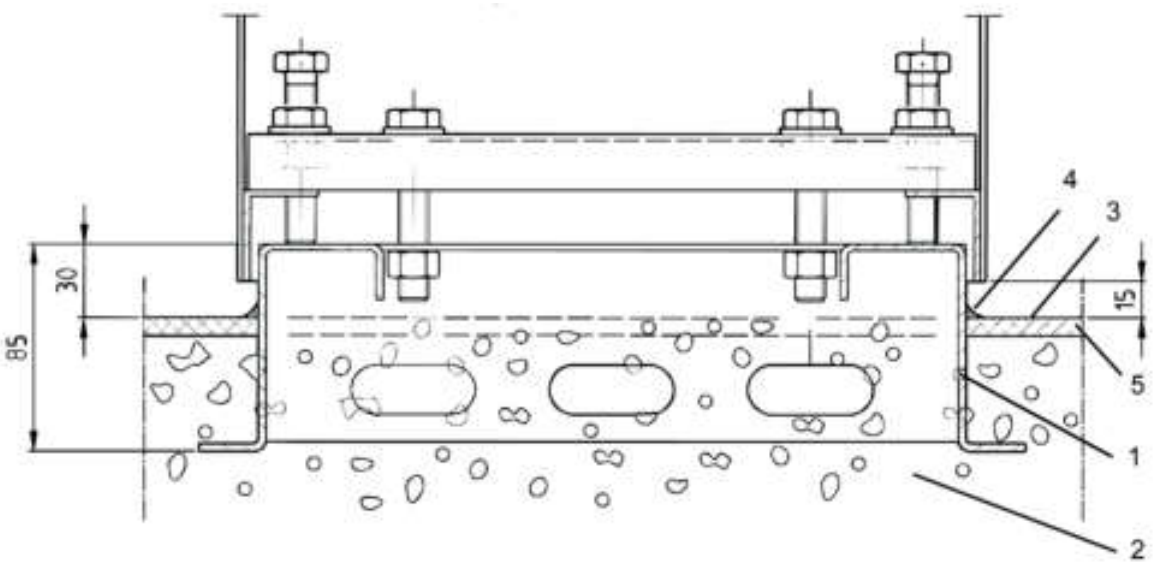

1. Installation frame
2. Concrete casting
3. Finished floor surface
4. Silicone mastic
5. Acrylic filler

Place the kettle on the installation frame and adjust to a horizontal position with the adjusting bolts which are in the corners of the pillars. When the kettle is in a horizontal position, it must be fixed to the installation frames with the help of M12 fixing bolts. The control pillar has 4 bolts and the support pillar has 2 bolts. Tighten the adjusting nuts carefully. Do not seal the space between the kettle pillars and installation frame as there must be enough change of air.

6.4.3. Surface installation frame fixed to the floor

Surface frames are mounted according to the installation drawing, with the help of distance guides supplied with the delivery. If the inclination of the floor is very steep, it may be necessary to level the surface frame closer to the horizontal by placing stainless steel spacers between the frame and the floor. This will ensure that the adjustment range of the pillars is adequate.

Pieces of stainless steel plate should be used as spacers that are large enough and have a suitable hole for the fixing bolt. Washers or other small spacers are not allowed.

The fixing bolts for the surface installation must be chosen according to the floor construction. A type recommended is a UKA M10x150 chemical bolt, which suits various floor materials. The junction of the surface frame and the floor is filled with flooring material or silicone mastic. To achieve the best result regarding tightness, the installation frame should be filled up to the top level e.g. with acrylic filler **after the installation**. The main points concerning the installation of the surface frame are shown in the picture below.

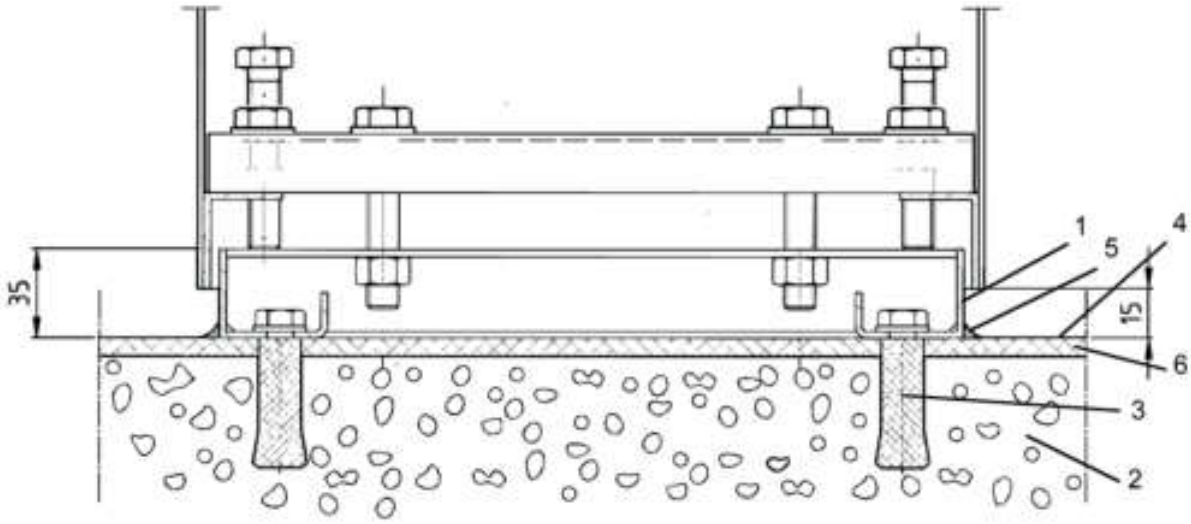

1. Surface frame
2. Concrete casting
3. Fixing bolt for surface frame
4. Finished floor surface
5. Silicone mastic
6. Acrylic filler

Fixing bolts of the surface installation must be chosen according to the floor material. Recommended type is a UKA 12x200 chemical bolt, which is suitable for different floor materials. Alternatively expansion-shell bolts or equivalent can be used.

Place the kettle on the surface installation frame and adjust to a horizontal position with 4 adjusting bolts which are in the corners of the pillars. When the kettle is in a horizontal position it must be fixed to the surface frame with the help of M12 fixing bolts. The control pillar has 4 bolts and the support pillar has 2 bolts. Tighten the fixing nuts carefully. Do not seal the space between the kettle pillars and surface installation frames, as there must be enough change of air.

6.4.4. Installing the combi-kettle on the frame

The front and rear cover plates of the kettle's support and control pillar must be detached before installation. Each plate has been fixed at its lower edge with two screws. After that, it is also possible to detach the lead-through plate of supply cables and water pipes located at the lower rear edge of the control panel by loosening four screws.

Installing the first left hand kettle or a single kettle

The kettle can be transferred from its transport pallet onto the installation frame in the following way. Cut the longitudinal boards of the pallet and push the fork-lift trolley below the kettle.

Care must be taken that the lifting arms of the fork-lift trolley do not hit the parts protruding from the kettle bottom, i.e. the mixing motor cover box (Proveno 40, 60, 80, 100) as well as the drain and discharge pipes.

Furthermore, it is recommended to place e.g. plywood strips between the fork-lift trolley and the kettle bottom. Before lifting, the transport support of the kettle's left-hand axle and the support pillar are detached from the transport pallet. It should be observed that the kettle pillars also moves. It is advisable to put a piece of foamed plastic or a rolled cellular board between the kettle and control pillar so that they do not hit each other.



Mounting the support pillar

Start installing the combi-kettle or kettle group by first positioning the left-hand support pillar in place. Lift the support pillar (1) on the installation frame (2) and adjust it by means of the adjusting bolts (3) located on the corners to a horizontal position and to a height of 900 mm measured from the top of the support pillar front edge to the floor. When the support pillar (1) is in place, fix it with two fixing bolts (4) to the installation frame (2).

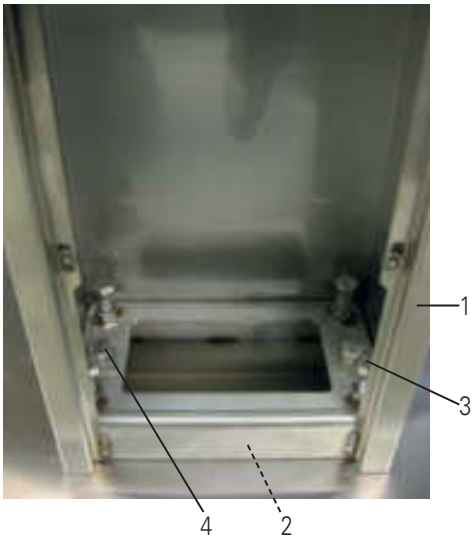

1. Support pillar
2. Installation frame
3. Adjusting bolt
4. Fixing bolt

Next, the control pillar (1) is adjusted by means of the adjusting bolts (3), located on the corners, to a horizontal position and on the same level with the support pillar. When the control pillar (1) is in position, it is fixed to the installation frame (2) with four fixing bolts (4). Check that the space between the kettle section and the support and control pillars is the same, both at the top and at the bottom.

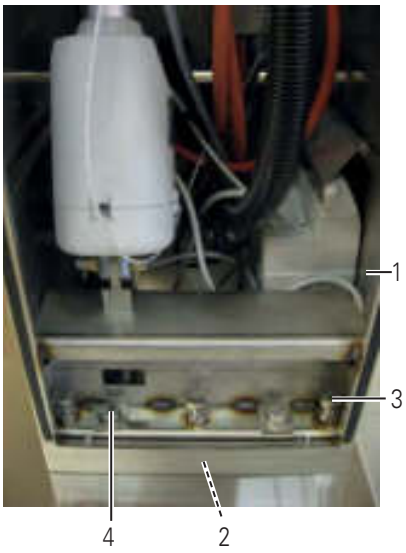

1. Control pillar
2. Installation frame
3. Adjusting bolt
4. Fixing bolt

Installing the following kettle in a kettle group

If a kettle group is installed proceed as follows:

Remove the bearing cover plate (1) from the installed kettle control pillar before installing the next kettle by removing the three fastening screws (2).

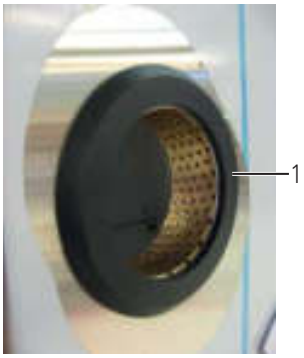

1. Bearing cover plate

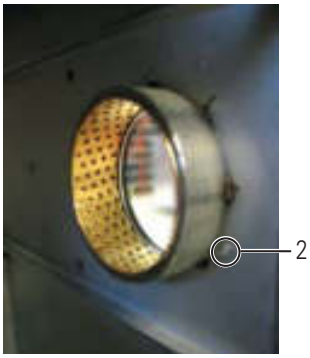

2. Fastening screw

Check that grease is applied on the bearing surface before proceeding. If needed apply grease suitable for use in food service areas to the bearing.

Push the removed bearing cover (1) and the stop ring (2) behind it onto the kettle axle before pushing the axle into the bearing.

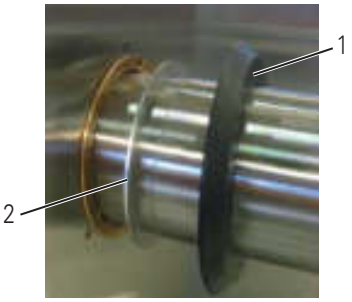

When the axle is pushed fully into the bearing and the stop ring makes contact with the bearing mount the locking ring (1) and secure it with the three locking screws (2). After that the three screws (3) for fastening the bearing cover plate can be refitted.



1. Locking ring
2. Locking screw
3. Bearing cover fastening screw

After this the control pillar can be adjusted and installed as previously described

6.5. Electrical connections

The electrical connections of the Proveno combi-kettle can only be carried out by a qualified electrician having the necessary competence for the installation and service of electrical appliances.

The control pillar cover plate is a fixed component, not intended for detaching. Do not force it upwards when removing the front and rear cover plates.

To make the electrical connections, the upper left-hand side plate, where the mains switch is located, must be removed.

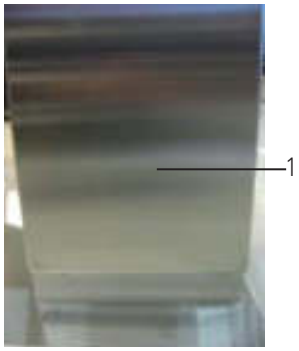

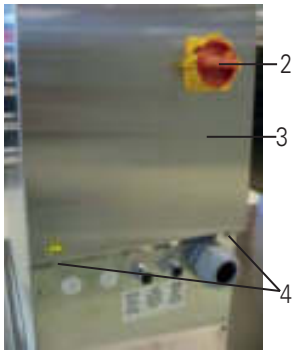

1. Front plate
2. Mains switch
3. Rear plate
4. Screw

Turn the mains switch (2) to the OFF position.

If the control pillar front plate (1) is in place, it must be first detached by opening two screws (4) at the lower section of the plate.

Detach the rear cover plate (3) by opening the screws (4).



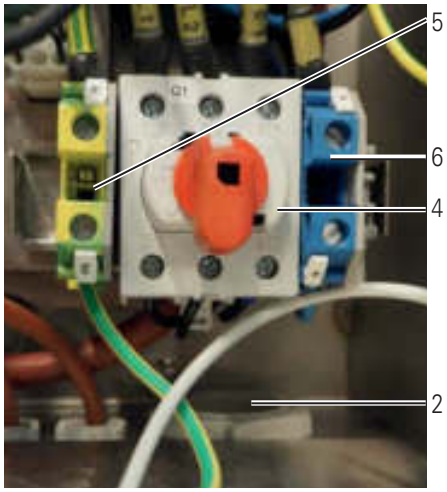

1. Supply cable
2. Lead-through plate
3. Cable bushing
4. Mains switch
5. PE termina
6. N terminal

Detach the lead-through plate (2) from the pillar. Slip the supply cable (1) through the cable bushing (3 of the lead-through plate and upwards via the lead-through of the electrical box behind the mains switch (4) to the top terminals. Connect the phase wires of the cable to the mains switch and N and PE cables (5, 6) to the terminal blocks.

After that, check phase order to make sure that the mixer and tilting motors rotate in the correct direction.

Close the lid and safety grid of the combi-kettle, but do not put the cover of the safety grid on.

Turn the mains switch to position 1 and switch the combi-kettle on by pressing . The display will show the basic functions.

Press . Start the mixer by pressing .

The mixer should rotate clockwise.

Stop the mixer by pressing .

On hydraulically tilted Proveno 200, 300 and 400 combi-kettles, you also have to check the rotation direction of the hydraulic pump motor.

Open the kettle lid and tilt the kettle by pressing .

If the motor is running but the kettle does not tilt after pressing the button for moment the rotation direction is wrong.

If the rotation direction in two foregoing points is wrong, two phases of the supply cable coming to the mains switch have to be exchanged.

Tighten the screws of the cable connections and the cable bushing properly, refit the lead through plate and the rear cover plate.

6.5.1. Electrical Connection to Icebank Unit

The Proveno combikettle and the icebank have two control line connections in order to co-operate during the cooling process of the kettle. Both connections are potential free. The first control connection is for starting of the icebank circulation pump for the kettle when cooling is requested. The second control line is for signaling of a possible malfunction of the icebank to the kettle user panel. The connection terminals are shown in the picture below.



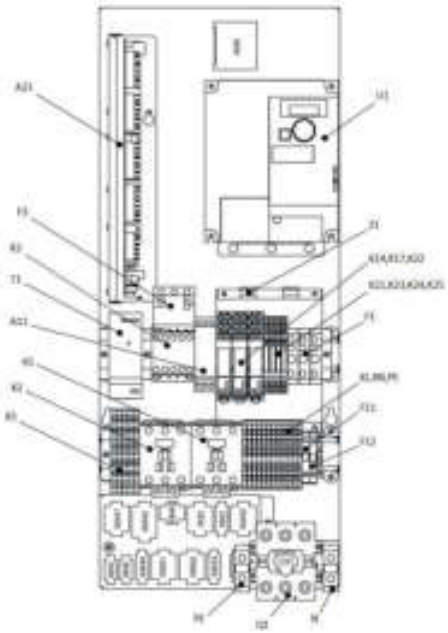

X3:7-8	Potential free icebank pump control signal
X3:9-10	Potential free malfunction signal from icebank

NOTE! When the combikettle and icebank unit control circuits are interconnected a combination of machines as specified by the EC Machinery Directive is created. This requires that at commissioning a signed declaration of conformity must be provided covering the combination of the two machines.

COMBINATION OF MACHINES

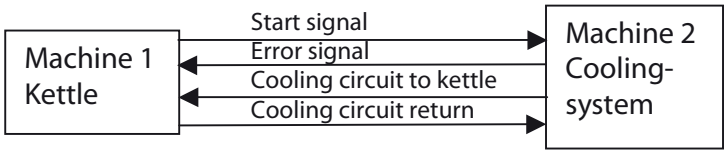

6.5.2. Electrical Connection to Peak Power Regulating Systems

The Proveno combikettle is prepared for connection to peak power regulating systems like Sicotronic or Ecotronic. These systems continuously monitor all the connected appliances of the site and intelligently control electrical power usage in order to keep total peak energy under set limit and at the same time minimize the effect this has on the usage of the appliances. The connection terminals are shown in the picture below. Before making the connections the wire links between terminals X3:1-3 and X3:2-4 must be removed.

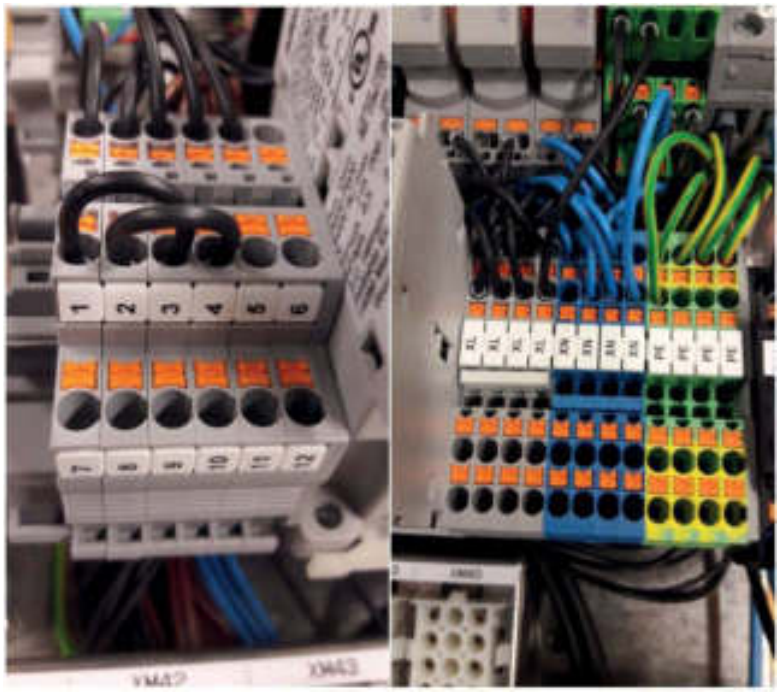

Remove wires from X3:1-4 to connect external system	
X3:1, 3	Heating contactor K2 control
X3:2, 4	Heating contactor K1 control
X3:5	Heating ON signal
XN	Neutral
PE	Protective earth

6.5.3. Forced Half Power

In cases where there is a limitation of electrical power supply there is a possibility to force the kettle to half heating power in order to enable some other appliance to momentarily be switched on. This will of course to some extent affect the cooking process of the kettle. The control input is to be connected to a potential free closing contact. The connection terminals are shown in the picture below.



X3:11-12	Potential free forced half power input

Electrical connections

A. Connections from the rear

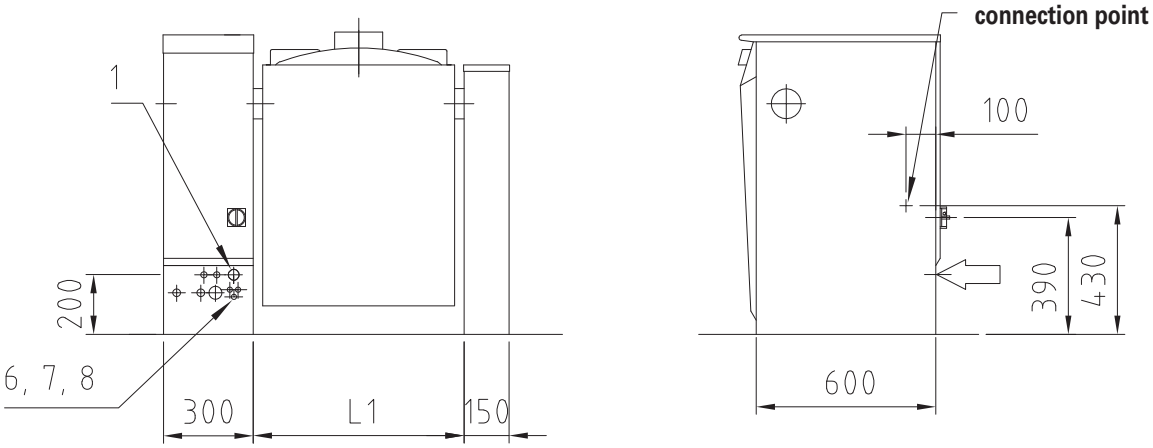

B. Connections from below

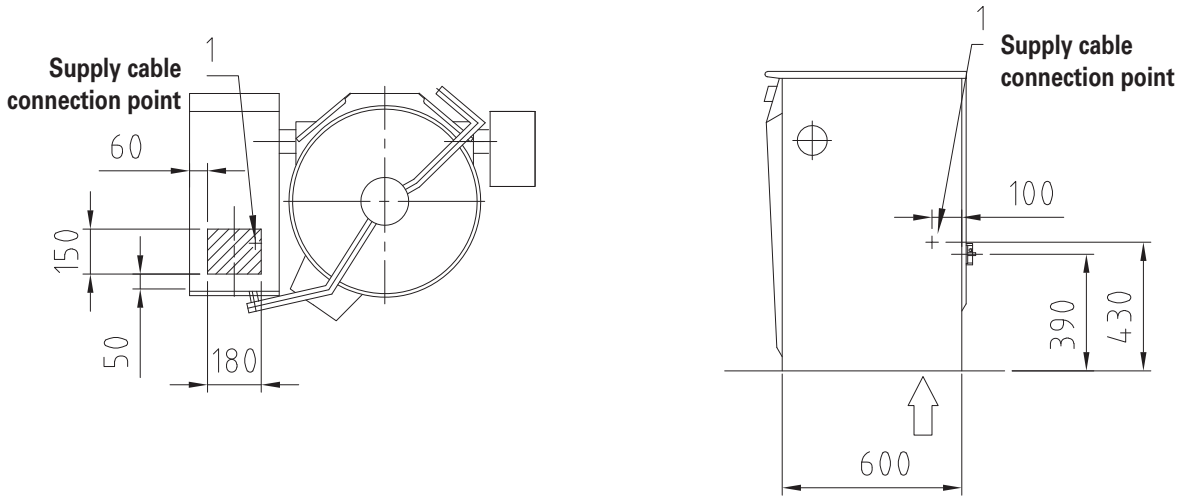

1. Electrical power supply cable, PG36/PG29 gland
6. Ice bank cooling control cable (option).
7. HACCP cabling (option).
8. Power management system control cable (option).

Detailed electrical connection data available in kettle electrical diagram.

6.6. Water and steam connections

Water connections of the Proveno combi-kettle can only be carried out by a person with professional competence in the installation and service of heating, plumbing and air conditioning equipment.

The location of the water connection points appears from the installation drawing. Both cold and hot water connections must be fitted with a closing valve and a non-return valve (not included in delivery). The sizes of water connection points are as follows:

Cold water: connection with R1/2" outer thread, supply with min. 15 mm inlet pipe

Hot water: connection with R1/2" outer thread, supply with 10 mm inlet pipe (max. +60°C)

If the cold water inlet pipe is smaller than 15 mm, water fl ow will decrease and the filling times will be longer than indicated.

- Cold and hot water supply lines must be fitted with a one-way valve and a shut-off valve (not included in delivery).
- Before connection to the unit all water lines must be thoroughly rinsed from all loose particles.
- The water pressure range for optimum performance is 250 - 600 kPa.
- The minimum water pressure allowed for proper function of the unit is 250 kPa.

Connections from the rear

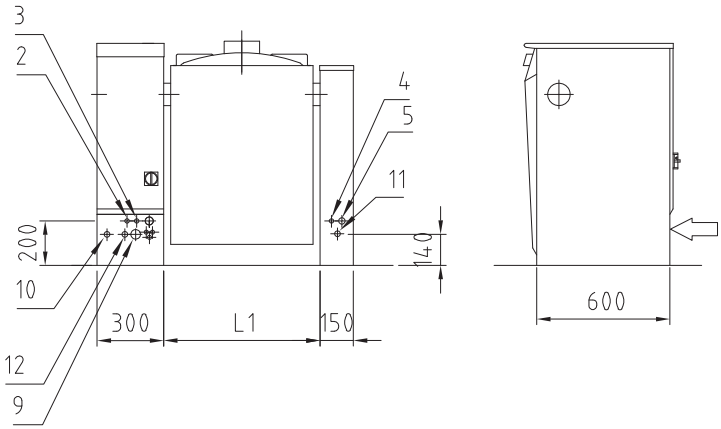

Connections from below

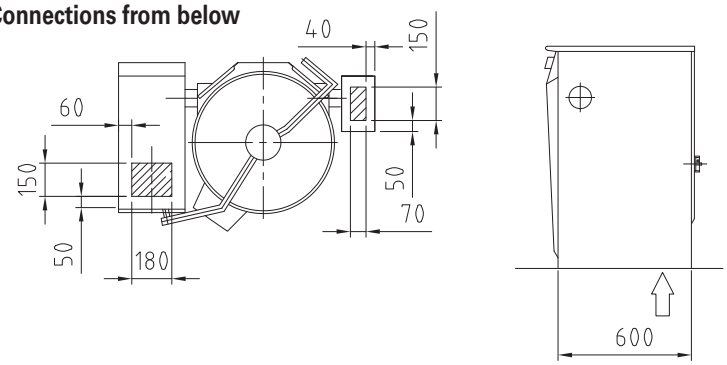

2. Cold water connection R1/2" (ø15). Must be fitted with a one way valve and shut off valve.
3. Hot water connection R1/2" (ø15). Must be fitted with a one way valve and shut off valve. (option)
4. Ice bank cooling inlet R3/4". Max. pressure 3 BAR, flow 90l/min. (option)
5. Ice bank cooling outlet R1". (option)
9. Steam inlet R3/4" / R1" / R1 1/4" (option)
10. Condensate outlet R1/2" / R3/4" (option)
11. Compressed air inlet R1/2" (option)
12 Twin water inlet R1/2"(option)

	⑨		⑩
40S	R3/4"	12 KG/H	R1/2"
60S	R3/4"	18 KG/H	R1/2"
80S	R3/4"	24 KG/H	R1/2"
100S	R1"	30 KG/H	R3/4"
150S	R1"	45 KG/H	R3/4"
200S	R1 1/4"	60 KG/H	R3/4"
300S	R1 1/4"	90 KG/H	R3/4"
400S	R1 1/4"	115 KG/H	R3/4"

An example of connections in a kettle group

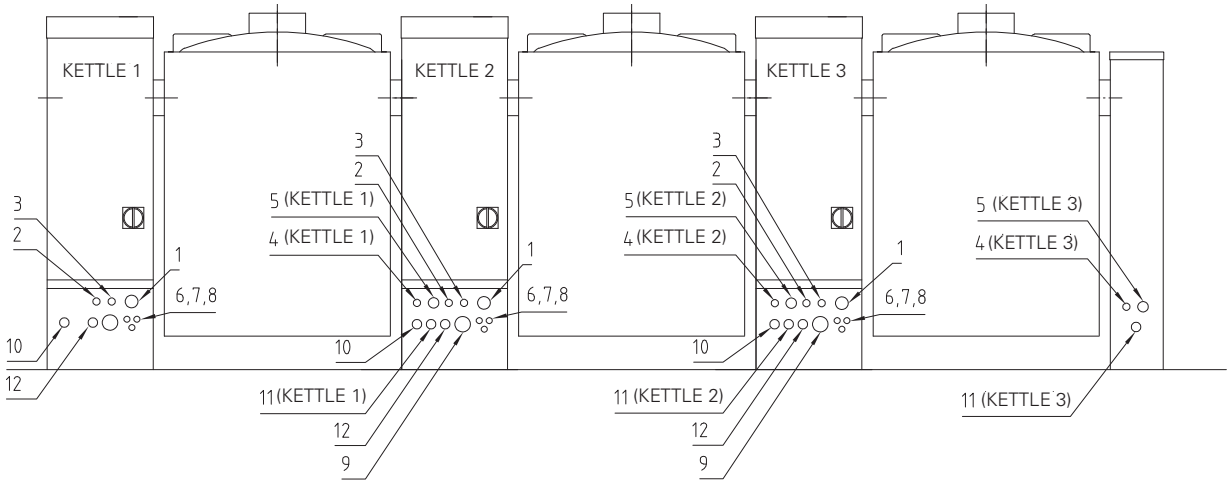

1. Electrical power supply cable, PG36/PG29 gland
2. Cold water connection R1/2" (ø15). Must be fitted with a one way valve and shut off valve.
3. Hot water connection R1/2" (ø15). Must be fitted with a one way valve and shut off valve. (option)
4. Ice bank cooling inlet R3/4". Max. pressure 3 BAR, flow 90l/min. (option)
5. Ice bank cooling outlet R1". (option)
6. Ice bank cooling control cable (option).
7. HACCP cabling (option).
8. Power management system control cable (option).
9. Steam inlet R3/4" / R1" / R1 1/4" (option)
10. Condensate outlet R1/2" / R3/4" (option)
11. Compressed air inlet R1/2" (option)
12. Twin water inlet R1/2"(option)

6.6.1. Ice bank connections (C3-option)

The location of the connection points of an external icebank appears from the installation drawing.

Icebank in: R ¾" outer thread. Max. pressure 3 BAR, flow 90l/min. The icebank must be fitted with a solenoid valve to stop the flow of cooling water after cooling has ended.

Icebank out: R 1" outer thread.

6.6.2. Water connection and quality requirements

- The unit must be connected to the cold and warm water supply and, if fitted with a twin water connection option (T), also to the soft water supply.
- All water supply lines must be fitted with a one-way valve and a shut-off valve (not included in delivery).
- Before connection to the unit all water lines must be thoroughly rinsed from all loose particles.
- The water pressure range for optimum performance is 250 - 600 kPa.
- The minimum water pressure allowed for proper function of the unit is 250 kPa. If the pressure is lower, a pressure rise pump must be fitted by the customer.
- The minimum water flow rate in the kettles is 5 l/min. To ensure optimal operation of the unit, it is recommended cold water flow rate must be at least 20 l/min.
- All water connections are of size Ø15mm (R 1/2").
- The size of particles in the water must not exceed 15 µm
- Water conductivity should be below 1000µS/cm. Already when the conductivity is over 500µS/cm, a water analysis is recommended.
- Maximum chloride concentration allowed is 60 mg/l.
- Maximum chlorine concentration allowed is 0,2 mg/l.
- The pH value of the water should be between 6,5 and 9,5.

- The water hardness should be less than 6 ° dH. Water hardness must not exceed 9 ° dH. If the hardness of the water is between 6-9 ° dH, it increases the need for cleaning the steam generator and shortens the lifespan of heating resistors.
- Unit damages caused by chloride, chlorine or pH values exceeding the stated limits are not covered by manufacturer warranty.

6.6.3. Extreme water conditions

When extreme water conditions not fulfilling the requirements above exist, filters and water treatment devices should be installed in order to ensure proper function of the unit and avoid corrosion. When extreme water conditions are at hand, a water quality analysis must be carried out. Depending on the results of the analysis, needed filters and water treatment devices are installed by the customer. The most common filters and treatment equipment are:

1. Particle filter
A 5-15µm particle filter is recommended when water contains sand, iron particles or other suspended matters.

2. Active carbon filter
An active carbon filter must be used if the chlorine level exceeds 0,2 mg/l.

3. Reverse osmosis system
A reverse osmosis system must be used if the chloride concentration exceeds 60 mg/l. This is very crucial in order to avoid corrosion.

4. Water softener
If a high level of scale build-up is experienced, a water softener is needed. H+ Ion Exchanger or Kleensteam are recommended systems. Sodium ion exchangers must not be used because of problems caused by high salt content. A water softener is recommended when the water hardness exceeds 6 ° dH. Water hardness must not exceed 9 ° dH.

The optional twin water connection should be used if the water quality does not meet the above requirements and a water treatment appliance is used. The twin water connection reduces the consumption of treated water because raw water can be used for cleaning purposes and for preparing the food.

NOTE!
Several water treatment equipment will lower the flow of water. If the kettle is connected to a water treatment unit, care must be taken to ensure sufficient flow after the water treatment unit. Particular attention is needed when using a twin water connection. The branching of the water must always be done before the water treatment unit.

6.6.4. Steam and condensate connections



The steam and condensate connections of the Proveno combi-kettle must be carried out by a person with professional competence in the field. Improper connections and piping may severely impact the correct function of the kettle.

The location of the steam and condensate connection points appears from the installation drawing.

The maximum steam pressure in the kettle is 1 bar. The steam supply line must be fitted with a one-way valve, a shut-off valve, a filter, a pressure reduction valve and a safety valve set at 1,5 bar.

The condensate pipe must be on the same floor as the kettle or go to the floor below. Leading the condensate pipe to the floor above the kettle is not allowed, as it creates a water trap that prevents normal function of the kettle.

The condensate pipe must be free from pressure created by other appliances.

The temperature of the incoming steam must never exceed 130°C. If needed, the pressure has to be reduced far enough away from the kettle to ensure that the temperature does not exceed the permissible value.

Steam supply recommendations

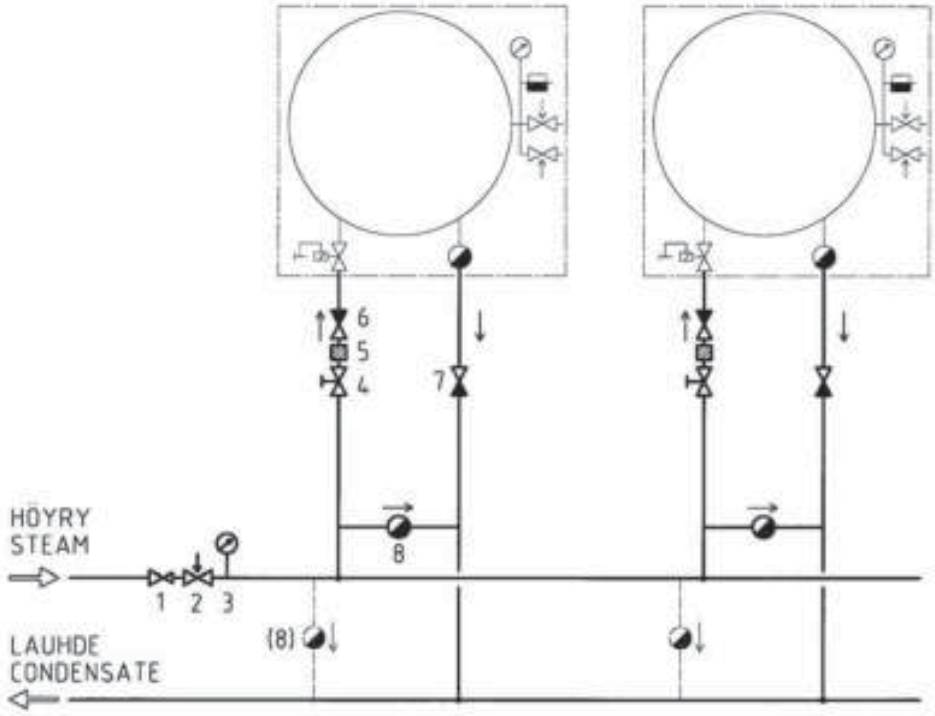

1. Paineenalennusventtiili
2. Varoventtiili
3. Painemittari
4. Sulkuventtiili
5. Suodatin
6. Takaiskuventtiili (mikäli kyseessä on jäähdytyksellä varustettu laite)
7. Takaiskuventtiili (0 bar)
8. Lauhteenerotin

1. Pressure reduction valve
2. Safety valve
3. Manometer
4. Shut-off valve
5. Filter
6. Non-return valve (in case of a cooling equipped appliance)
7. Non-return valve (0 bar)
8. Condensate remover

6.7. Ventilation

The heat and steam load of the kettle must be taken into account in the kitchen's ventilation plan. A ventilation hood must be installed above the kettle, because plenty of steam is released when the kettle lid is opened. When dimensioning the ventilation hood, the space requirement for opening the lid must be taken into account (see installation drawing).

6.8. Other installations

In case the combi-kettle being installed is connected to a kitchen power management system the connection points are shown in the electric wiring diagram.

6.9. Procedures after installation

6.9.1. Adjusting the tilting

Before refitting the cover plates on the combi-kettle control panel, you have to check and, when needed, adjust the operation of tilting.

On hydraulically tilted Proveno 200, 300 and 400 combi-kettles the rotation direction of the hydraulic pump has to be checked according to "6.5 Electrical connections"

Next you have to ensure that the kettle is horizontal when it is in the cooking position. Before that make sure that the combi-kettle's control pillar has been installed horizontally. Checking is done as follows:

- First tilt the kettle at least half-way and after that press the tilting reverse button as long as the kettle stops in the cooking position.
- Check that the is kettle horizontal by the upper rim of the kettle.

If the kettle is not horizontal, the position of the mounting plate of the tilting limit switches must be adjusted as follows:

- Tilt the kettle at least half-way.
- Loosen the locking nut for adjustment (5) and the fixing nut for the limit switch plate (6) so that the limit switch plate (1) can be moved, but after moving stays in the new point.
- If the combi-kettle in its cooking position is tilted too much towards the spout, turn the limit switch plate (1) slightly downwards. In case the kettle in its cooking position is tilted too much backwards, turn the limit switch plate (1) slightly upwards
- Tighten the locking nut (5) slightly after adjustment, press the tilting reverse button until the kettle tilting stops and check the kettle's horizontal again by the upper rim of the kettle.
- Tighten both the fixing nut (6) and the locking nut (5), if the combi-kettle is horizontal in its cooking position. Otherwise, repeat the adjustment measures.

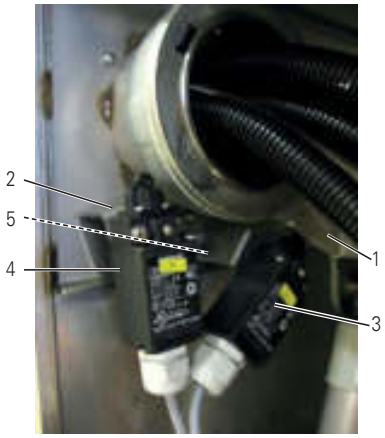

1. Tilting lever
2. Mounting plate of limit switches
3. Limit switch for cooking position
4. Limit switch of tilting end position
5. Locking nut for adjustment

6.9.2. Fastening the mixer motor cover box

On the large kettle models (Proveno 150, 200, 300, 400), the cover box of the mixing motor comes unattached inside the kettle. The cover box is fastened after installation by using the screws supplied while the kettle is in a tilted position.

6.10. First run and testing

The following checks must be performed after the installation before taking the Proveno combi-kettle into regular use.

6.10.1. Filling the steam generator

The steam generator of the Proveno combi-kettle is empty of water on delivery. When the combi-kettle is started for the first time after installation, the steam generator is automatically filled. After fi rst run, the combi-kettle automatically checks and maintains the correct water amount in the steam generator.

- First check that the closing valves coming to the kettle are in the ON position and the kettle's mains switch is in position 1.
- Switch the kettle on with the 0/1 button.
- Check that the kettle section is in the cooking position by pressing the tilting reverse button.
- Filling the steam generator of the combi-kettle can take several minutes, depending on the kettle size.

6.10.2. Safety valve test

Electrically heated kettle

Press  and select "Safety valve test"

- Start the test by pressing . The kettle starts heating up.
- When the kettle is warm  is shown. Hold the button pressed until the safety valve opens.



It is not allowed to stand behind the kettle during the safety block check, because, when the check is completed, the safety valve at the kettle's rear edge opens, blowing hot steam out of the kettle. The kettle must be clean and empty. The test causes a momentary strong hissing sound. Wear hearing protection



The kettle gives an alarm signal and interrupts the test if the safety valve does not open within acceptable limits. In this case, it is strictly prohibited to continue using at the kettle, and you should immediately contact a qualified Metos service to fix the error.

Steam heated kettle

Press  and select "Safety valve test"

- Open the safety valve by slowly by turning the knob in the direction of the arrow.
- When the steam is discharging (sound, pressure gauge reading reduces) allow the knob to return to the start position.



- Confirm the safety valve test is done by pressing .

It is not allowed to stand behind the kettle during the safety block check, because, when the check is completed, the safety valve at the kettle's rear edge opens, blowing hot steam out of the kettle. The kettle must be clean and empty. The test causes a momentary strong hissing sound. Wear hearing protection

If the test was not implemented as described it is strictly prohibited to continue using at the kettle, and you should immediately contact a qualified Metos service to fix the error.

6.11. Adjustments, programming

The Proveno combi-kettle has been programmed in the factory with values suitable for the needs of professional kitchens. The combi-kettle is, however, provided with customer specific function parameters, which makes it possible to alter certain functions to better suit the specific needs of an individual customer or kitchen.

Should adjustments be needed, see "Adjustment instructions" for customer specific setting values.

Parameter values for adjustment by authorized service personnel are given in a separate service manual.

6.12. Staff training

Before taking the Proveno combi-kettle into use, make sure that the operators have sufficient information about the correct and safe use of the kettle.

6.13. Combination of machines

When the kettle is connected to a closed loop cooling system, a combination of machines as specified in the machinery directive is created for which, at commissioning, a signed declaration of conformity must be provided covering the combination of machines.

COMBINATION OF MACHINES

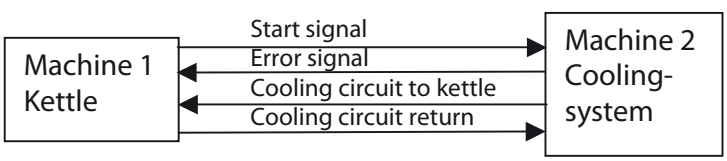

7. Technical specifications

7.1. Dimensions

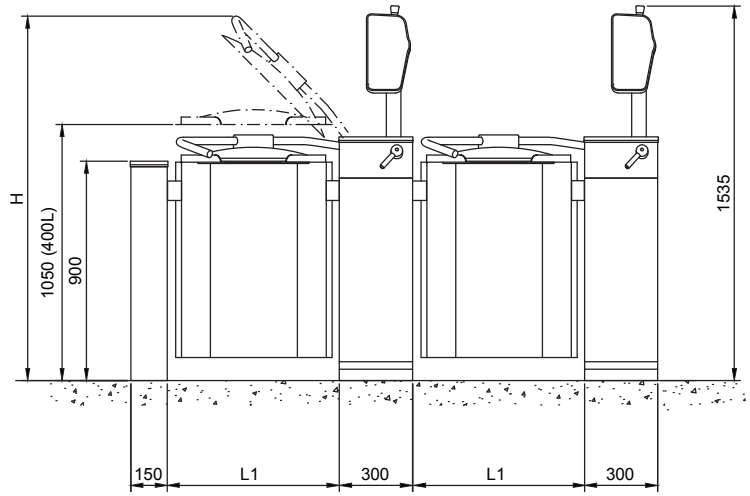

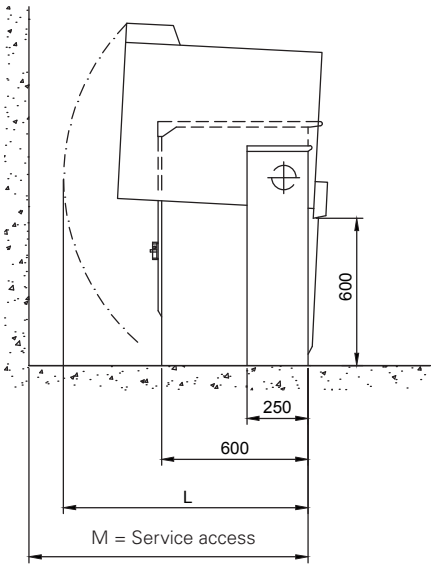

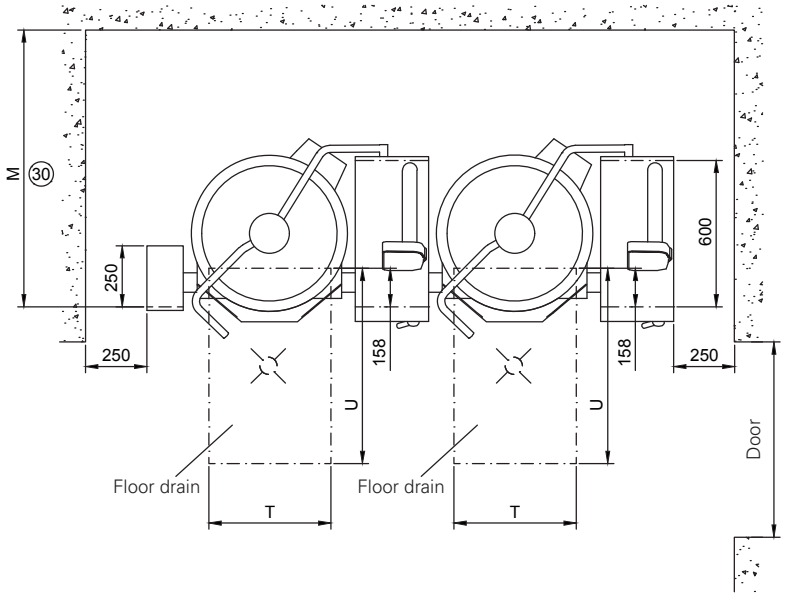

Proveno	L1 (mm)	H (mm)	K (mm)	L (mm)	M (mm)	E (mm)	U (mm)	T (mm)	Door (mm)	N (mm)	Weight (kg)
40	597	1740	900	870	1055	100	800	400	800	600	215
60	597	1740	900	955	1180	100	800	400	800	600	225
80	704	1745	900	1010	1235	85	800	500	800	600	245
100	704	1745	900	1010	1235	85	800	500	800	600	280
150	910	1945	900	1075	1170	110	800	600	1000	600	320
200	910	1945	900	1155	1285	110	800	600	1000	600	360
300	1110	2110	900	1280	1320	150	1000	600	1200	600	430
400	1110	2080	1050	1280	1320	150	1200	600	1200	600	490

The minimum free distance to any structure behind the kettle needed for tilting of the kettle is dimension L depending on model. However service access to the components under the kettle bowl requires the bigger dimension M.
National and local regulations must be observed when installing the combi kettle.

7.2. Floor drain and installation frame positioning

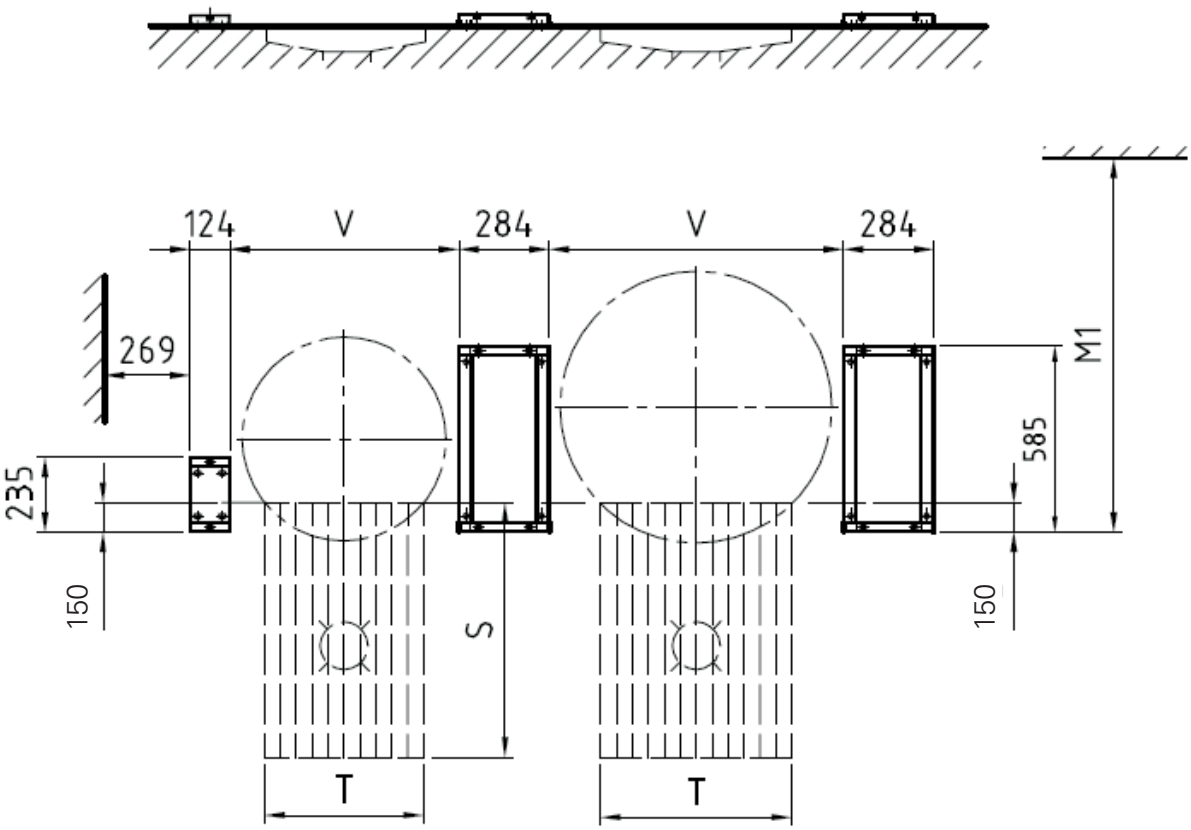

Model	M1	V	S	T
40E	1047	613	800	400
60E	1172	613	800	400
80E	1227	720	800	500
100E	1227	720	800	500
150E	1162	926	800	600
200E	1277	926	800	600
300E	1312	1126	1000	600
400E	1312	1126	1200	600

7.3. Steam connection

Model	Inlet		Condensate outlet
40S	R3/4"	12 kg/h	R1/2"
60S	R3/4"	18 kg/h	R1/2"
80S	R3/4"	24 kg/h	R1/2"
100S	R1"	30 kg/h	R3/4"
150S	R1"	45 kg/h	R3/4"
200S	R1 1/4"	60 kg/h	R3/4"
300S	R1 1/4"	90 kg/h	R3/4"
400S	R1 1/4"	115 kg/h	R3/4"

7.4. Water connection

Cold water connection R1/2" (ø15). Must be fitted with a one way valve and shut off valve.
Hot water connection R1/2" (ø15). Must be fitted with a one way valve and shut off valve. (option)

7.5. Icebank connections (option)

Ice bank cooling inlet R3/4". Max. pressure 3 BAR, flow 90l/min. (option)
Ice bank cooling outlet R1". (option)

7.6. Electrical connections

Electrically heated kettles

3/N/PE AC 400/230V 50 Hz			
Tyyppi	**Teho/kW**	**Virta/A**	**Sulake/A**
Proveno	**Power/kW**	**Current/A**	**Fuse/A**
40EM	14	26,1	32
60EM	18	31,9	32
80EM	22	37,7	40
100EM	22	37,7	40
150EM	27,6	50,5	63
200EM	37,6	65	80
300EM	51,6	85,3	100
400EM	62,4	95,6	100

Steam heated kettles

2/PE AC230V 50-60Hz, 1/N/PE AC 230V 50Hz			
Tyyppi	**Teho/kW**	**Virta/A**	**Sulake/A**
Proveno	**Power/kW**	**Current/A**	**Fuse/A**
40SM	2,3	10	10
60SM	2,3	10	10
80SM	2,3	10	10
100SM	2,3	10	10
150SM	3,9	17	20

3NPE AC 400/230V 50Hz			
Tyyppi	**Teho/kW**	**Virta/A**	**Sulake/A**
Proveno	**Power/kW**	**Current/A**	**Fuse/A**
200SM	5,0	18	20
300SM	5,0	18	20
400SM	6,2	23,2	25

The values of the special voltages differ from the standard voltage values.

METOS OY AB **EU-VAATIMUSTENMUKAISUUSVAKUUTUS** Proveno3G_VV_2.doc
LOMAKE LT30024 **EU FÖRSÄKRAN OM ÖVERENSSTÄMMELSE**
Rev. PED 5.5 05.06.2017 **EU DECLARATION OF CONFORMITY**

Valmistajan nimi / Tillverkarens namn / Manufacturer's name
METOS OY AB

Osoite / Adress / Address
04220 KERAVA
FINLAND

Vakuuttaa, että seuraava tuote / Försäkrar att följande produkt / Declare that the following product

Nimi, tyyppi tai malli / Namn, typ eller modell / Name, type or model
Kombipatasarja / Kombigrytsserie / Combikettle serie **METOS PROVENO 3G** sähkö- tai höyrylämmitteinen / el- eller ånguppvärmd / electrically or steam heated.
Mallit / Modeller / Models : 40, 60, 80, 100, 150, 200, 300, 400
Varustepaketit / Optionspaket / Option sets: T, C2, C3i, C5i, PA, S1-S3, D1-D2, P9, HA, DO, FS

on seuraavien direktiivien asiaankuuluvien säännösten mukainen / överensstämmer med tillämpliga bestämmelser i följande direktiv / is in conformity with the relevant provisions of the following directives

MD 2006/42/EC, LVD 2014/35/EU, EMC 2014/30/EU, RoHS 2011/65/EC, WEEE 2012/19/EU
PED 2014/68/EU, moduulit / modulerna / modules B1 + D
- SEP: 40 – 60 höyry/ånga/steam
- Cat I: 40 – 60 sähkö/el/electric, 80 – 400 höyry/ånga/steam
- Cat II: 80 – 400 sähkö/el/electric

HUOM: PED 2014/68/EU:n mukaisesti vaatimustenmukaisuusvakuutus ja CE-merkintä ei koske SEP luokiteltuja laitteita.
OBS: Enligt PED 2014/68/EU försäkran om överensstämmelse och CE-märkningen ej produkter i SEP kategorin.
ATT: According to PED 2014/68/EU the declaration of conformity and the CE-marking does not apply to SEP category products.

ja lisäksi vakuuttaa, että seuraavia yhdenmukaistettuja standardeja (tai niiden osia/kohtia) on sovellettu / och försäkrar dessutom att följande harmoniserade standarder (eller delar/paragrafer) har använts / and furthermore declares that the following harmonised standards (or parts/clauses) have been used

EN ISO 12100:2010, EN ISO 13857:2008
EN 61000-6-1:2005, EN 61000-6-3:2007
EN 60204-1:2006, EN 13445:2014

ja lisäksi vakuuttaa, että seuraavia muita standardeja (tai niiden osia/kohtia) on sovellettu / och försäkrar dessutom att följande andra standarder (eller delar/paragrafer) har använts / and furthermore we declare that the following other standards (or parts/clauses) have been used

EN 13886:2005+A1:2010
EN 1717:2001

Tuotteen suunnitelmatarkastustodistus ja laatujärjestelmää valvova ilmoitettu laitos (vain painelaitteet)
Produktens konstruktionskontrollcertifikat och anmält organ, som övervakar kvalitetssystemet (endast tryckkärl)
Product design examination certificate and the notified body supervising the quality system (only pressure vessels)

Quality system Inspecta Tarkastus Oy, Helsinki, Finland 0424	DA-617-17-102669 (4E, 4S, 6E, 6S), DA-617-17-102744 (8E, 8S, 10E, 10S), DA-617-17-102745 (15E, 15S, 20E, 20S), DA-617-17-102746 (30E, 30S, 40E , 40S) DEKRA Industrial Oy, Vantaa, Finland 0875

Alla mainittu henkilö on valtuutettu kokoamaan teknisen tiedoston / Nedan nämda person är bemyndigad att sammanställa den tekniska dokumentfilen / The person mentioned below is authorized to compile the technical file

Tero Kähärä Metos Oy Ab, Ahjonkaarre, 04220 Kerava, Finland

Tämä vaatimustenmukaisuusvakuutus on annettu valmistajan yksinomaisella vastuulla. Edellä kuvattu vakuutuksen kohde on unionin asiaankuuluvan yhdenmukaistamislainsäädännön vaatimusten mukainen.
Denna EU-försäkran om överensstämmelse utfärdas på tillverkarens eget ansvar. Föremålet för försäkran ovan överensstämmer med den relevanta unionslagstiftningen om harmonisering.
This declaration of conformity is issued under the sole responsibility of the manufacturer. The object of the declaration described above is in conformity with the relevant Union harmonisation legislation

Antopaikka ja päivä / Utfärdad på ort och datum / Place and date of issue
KERAVA 27.6.2017

Vakuutuksen antajan nimi ja asema / Namn och befattning av personen som försäkrar / Name and title of declaring person

Hannu Ahola – Director of Business Unit

Tero Kähärä – R&D Manager



www.metos.com