CULINO KETTLE

CULINO / CULINO COMBI

ELECTRICALLY HEATED

TYPE: 40E, 60E, 80E, 100E, 150E, 200E, 300E, 400E

Accessories
MIXER
MANUAL COOLING
AUTOMATIC COOLING
ICEBANK COOLING
TIMER
AUTOMATIC WATER FILLING

Installation and Operation Manual



S/N: 10911002080010 Valid from: 14.6.2012 Rev.: 1.7

4215202, 4215203, 4215204, 4215205, 4215206, 4215207, 4215243, 4215722, 4215947, 4215948, 4215949, 4215950, 4215951, 4215953, 4215954, 4215955

Dear Customer,

Congratulations on deciding to choose a Metos appliance for your kitchen activities. You made an excellent choice. We will do our be st to make you a satisfied Metos customer like thousands of customers we have around the world.

Please read this manual carefully. You will learn correct, safe and efficient working methods in order to get the best possible benefit from the appliance. The instructions and hints in this manual will give you a quick and easy start, and you will soon note how nice it is to use the Metos equipment.

All rights are reserved for technical changes.

You will find the main technical data on the rating plate fixed to the equipment. When you need service or technical help, please let us know the serial number shown on the rating plate. This will make it easier to provide you with correct service.

For your convenience, space is provided below for you to record your local Metos service contact information.

METOS TEAM

Metos service phone number:.....

Contact person:.....

1. General 1

1.1 Symbols used in the manual 1

1.2 Symbols used on the appliance 1

1.3 Checking the relationship of the appliance and the manual 1

2. Safety 3

2.1 Safety features 3

2.2 Emergency-stop switch 3

2.3 Warnings 4

3. Functional description 5

3.1 Operating principle 5

3.2 Construction and control panel 6

4. Operating instructions 9

4.1 Before use 9

4.1.1 After the installation 9
4.1.2 Before the first use 9
4.1.3 Daily 9
4.1.4 Quarterly 9
4.1.5 Yearly 11
4.1.6 Checking the water level of the steam generator 11
4.1.7 Total emptying of the steam generator 12

4.2 Operation 12

4.2.1 Cooking 12
4.2.2 Tilting the kettle 14
4.2.3 Filling water into the kettle (Culino 40-400) 14
4.2.4 Mixer operation 15
4.2.5 Manual cooling C1 (optional) 23
4.2.6 Automatic cooling C2 (optional) 25
4.2.7 Operation of the timer (optional) 26
4.2.8 Automatic water filling (option) 27

4.3 After use 30

4.3.1 Cleaning the kettle 30
4.3.2 Treatment of stainless steel 32
4.3.3 Notes on service work 33

5. Installation 34

5.1 Before installation 34

5.1.1 Transport and reception 34
5.1.2 Storage 34

5.1.3 Facilities 35
5.1.4 Unpacking the unit 35
5.1.5 Industrial safety during installation 35
5.2 Installation 35
5.2.1 Installation on subsurface frames cast into the floor 36
5.2.2 Installation on surface installation frames 37
5.3 Electrical and water connections 37
5.3.1 Electrical connection 38
5.3.2 Water connection 38
5.4 Ventilation 39
5.5 Other installations 39
5.6 Adjusting the tilting 39
5.7 Testing the kettle 40
5.7.1 Filling the steam generator 40
5.7.2 Preventing the scale build-up 41
5.7.3 Checking the safety valve 42
5.8 Testing the mixer 44
5.8.1 Checking the functions 44
5.8.2 Checking the safety equipment 45
5.9 Combination of machines 45

6. Troubleshooting 46

8. Technical specifications 49

1. General

Carefully read the instructions in this manual as they contain important information regarding proper, efficient and safe installation, use and maintenance of the appliance.

Keep this manual in a safe place for eventual use by other operators of the appliance.

The installation of this appliance must be carried out in accordance with the manufacturer's instructions and following local regulations. The connection of the appliance to the electric, steam and water supply must be carried out by qualified persons only.

Persons using this appliance should be specifically trained in its operation.

Switch off the appliance in the case of failure or malfunction. The periodical function checks requested in the manual must be carried out according to the instructions. Have the appliance serviced by a technically qualified person authorized by the manufacturer and using original spare parts.

Not complying with the above may put the safety of the appliance in danger.

1.1 Symbols used in the manual



This symbol informs about a situation where a safety risk might be at hand. Given instructions are mandatory in order to prevent injury.



This symbol informs about the right way to perform in order to prevent bad results, appliance damage or hazardous situations.



This symbol informs about recommendations and hints that help to get the best performance out of the appliance.

1.2 Symbols used on the appliance



This symbol on a part informs about electrical terminals behind the part. The removal of the part must be carried out by qualified persons only.

1.3 Checking the relationship of the appliance and the manual

The rating plate of the appliance indicates the serial number of the appliance. If the manuals are missing, it is possible to order new ones from the manufacturer or the local representative. When ordering new manuals it is essential to quote the serial number shown on the rating plate.

If language versions have information contradictions, the original language Finnish is the primary language regarding the information content.

This manual covers the following Culino and Culino Combi kettles and all their options:

- electrically heated Culino kettles 40, 60, 80, 100, 150, 200, 300 and 400 litres

- mixer (Culino Combi)
- cooling attachment (option)
- timer (option)
- automatic water filling (option)

The user panel and the available functions of the Culino kettle are different depending on the kettle version:



Culino Basic Kettle



Culino + Timer



Culino + Automatic Water Filling



Culino + Timer +
Automatic Water Filling



Culino Combi - Kettle with Mixer



Culino Combi + Timer



Culino Combi +
Automatic Water Filling



Culino Combi + Timer +
Automatic Water Filling

2. Safety

2.1 Safety features

The kettle is built for 1,5 bar pressure, and the working pressure is 1,0 bar. The working height is 900 mm.

The double steam jacket is isolated with a third casing jacket, throughout equipped with a foil and foam insulation, which limits the top temperature of the outer steam jacket under the skin burn limit. The control panel works with 12 V low voltage. The kettle can be cleaned with a cleaning hose (IP65). Water jets directed towards the vent holes and control panel from a near distance should be avoided.

The kettle is fitted with manydifferent safety devices to ensure smooth and safe operation. The safety equipment at the rim behind the kettle includes a pressure gauge, a safety valve and an automatic vacuum valve. The safety valve opens if the steam pressure exceeds 1,5 bar.

In addition to the safety valve, the kettle has a built-in electronic temperature control which operates as a backup safety device of the safety valve. The control does not allow the steam jacket temperature to exceed 120°C. This temperature corresponds to a 1,0 bar steam pressure.

The water level probe in the steam generator operates as a boil dry protector. In case of insufficient water level in the steam generator, the red water level indicator light on the control panel turns on and the kettle does not warm up. In addition, a limit switch which is attached to the tilting axle turns off the heating during the tilting.

Due to the safety switch which is on the safety lid it is not possible to start mixing (Culino Combi), if the safety grid is not in position. The kettle will not tilt, if the lid is on the kettle.

2.2 Emergency-stop switch

All Culino kettles are equipped with an emergency-stop switch, which disconnects the control circuit and all functions of the kettle and the mixer will be stopped. To restart the cooking/mixing, turn the emergency-stop switch clockwise until it jumps to its upper position. After this has been done, all other switches and buttons can be activated again.

2.3 Warnings

Please take careful note of the following instructions and warnings. Further on in this manual, there are warnings which are to be noted in special operation situations. To prevent damage and accidents, please read the whole manual before attempting to operate the appliance.

- Culino kettles are to be used only for food preparation. Interacting or corrosive substances are not to be prepared in the kettle. Note that also long-term effect of some food preparation substances, such as salt, acetic acid, lemon acid and lactic acid, can be corrosive.
- To prevent burns, do not during the use touch the inner surface and the rim of the kettle, safety lid and mixing tool. Do not put your hands, without appropriate protection, above the kettle while cooking.
- Beware of hot steam when removing the lid.
- Do not open the filling and emptying valves and the water level valve of the steam generator when there is pressure in the steam jacket. Releasing hot steam might cause burns.
- Do not stand behind the kettle during tilting.
- The mixer must be turned off before removing the mixing tool.
- Do not push utensils or your fingers through the openings in the safety lid into the kettle during mixing.
- It is under all circumstances absolutely forbidden to use the mixer without the safety lid.
- To prevent stress injuries do not lift the mixing tool from the kettle when it is in a vertical position. Tilt the kettle in a horizontal position and remove the mixing tool. We recommend the use of a trolley to help removing of the mixing tool of larger kettles (200-400 l).
- After using the kettle, check that the shower gun and the water inlet tap of the kettle are closed.
- After using the kettle, clean it according to the cleaning instructions given in this manual to keep the high hygiene level.
- It is forbidden to use the kettle without cover plates or if the cover plates are not properly fitted.
- The factory pre-set program parameters of the kettle and mixer may only be changed by authorized personnel according to the instructions given by the factory.
- Beware of sharp edges on the sheet construction inside the kettle pillars during installation and service work.
- The following danger of electrical shock mark is fitted on cover plates protecting electrical components from being touched which would cause danger to life.



The manufacturer will not take responsibility for potential damage caused to units or persons if the given instructions have not been followed.

3. Functional description

3.1 Operating principle

The Culino kettle is heated by steam generated with heating elements. The steam generator is situated below the kettle. The steam jacket reaches the upper edge of the kettle. The cooking procedure is regulated by electronic temperature control. The kettle tilts by means of a tilting motor (high tilting). The inner surface of the kettle and the jacket are acid proof stainless steel (AISI 316). All other construction is of stainless steel (AISI 304). The kettle is provided with a third jacket and it is throughout thermally isolated.

The motor and power transmission (Culino Combi) are situated below the mixing tool. The kettle with a mixer is provided with a safety lid having a large lid opening. When the safety lid is open the mixer does not work. The control panel for both the kettle and the mixer are in the control pillar.

The optional cooling system is based on cold water circulating inside the steam jacket. Cold water runs in a connection hose from the water faucet, which is in the control pillar, to the water level valve and further to the outlet pipe of the upper edge and to the floor drain which is in front of the kettle.

The optional programmable timer enables to pre-set the starting and cooking times. When the program is completed, the cooking temperature is automatically set to the Hold temperature (+ 70°C).

The optional automatic water filling enables filling of the kettle with a desired amount of water. Thus water filling takes place automatically, without supervision.

3.2 Construction and control panel

The main features of the Culino kettle are described in the following pictures.

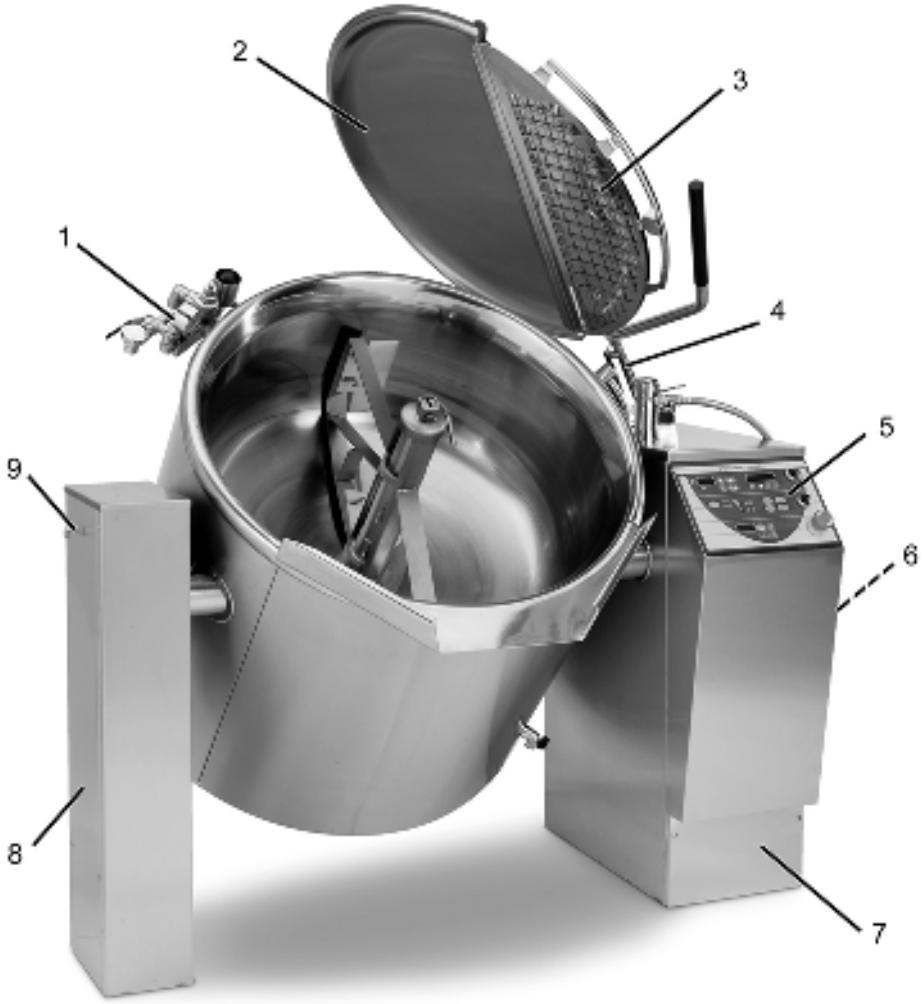

1. safety block
2. safety lid
3. safety grid for opening
4. lid hinge
5. control panel
6. cleaning hose
7. control pillar
8. support pillar
9. peg for hanging tools

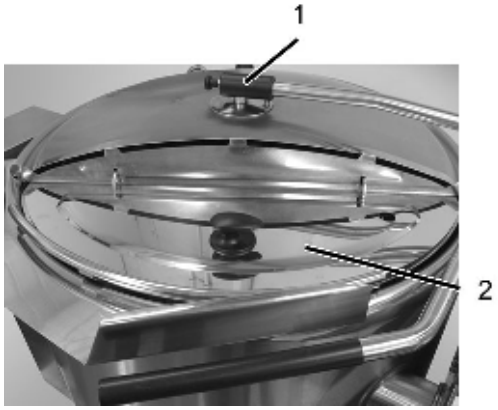

1. fixing screw of lid
2. cover for lid opening

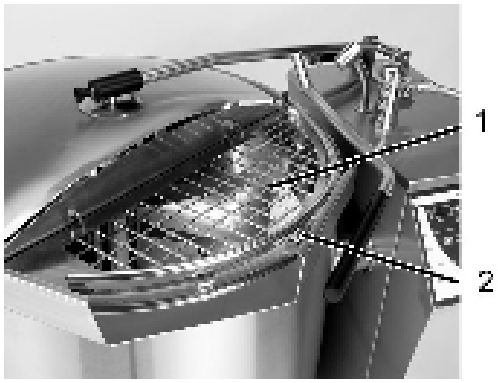

1. safety grid for lid opening
2. safety switch

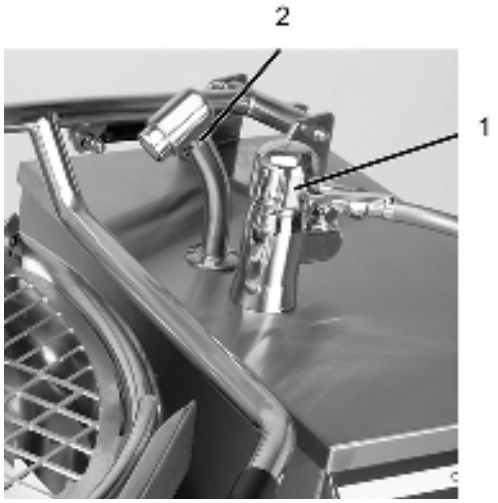

1. one-arm faucet for cleaning hose
2. spout for kettle filling

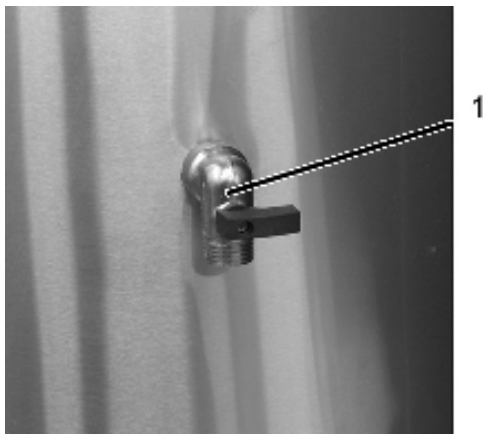

1. emptying/water level valve of steam generator

The control panel and its functions are described in the following picture. Please note that the function buttons for mixing, timer and automatic water filling are not in the control panel if the kettle is not equipped with these options.

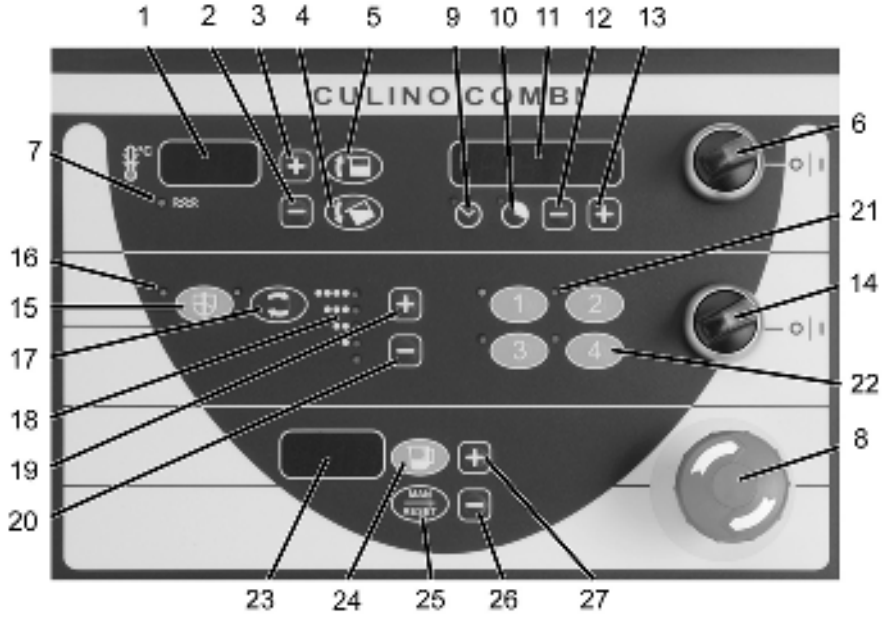

Functions of the Culino kettle

1. digital temperature display
2. temperature increasing button
3. temperature decreasing button
4. tilting button
5. tilting button to upright position
6. kettle on-off switch with indicator light
7. low water level indicator light (on electrically heated models only)
8. emergency-stop button

Timer functions

9. starting time programming button
10. cooking time programming button
11. digital timer display
12. time increasing button
13. time decreasing button

Mixer functions

14. mixer on-off switch with indicator light
15. start/stop-button
16. function light
17. auto-reverse button
18. mixing speed indicator lights
19. mixing speed increasing button
20. mixing speed decreasing button
21. indicator lights of pre-set programs
22. buttons of pre-set programs 1-4

Water filling system

23. 3-digit display
24. automatic water filling
25. manual water filling + reset
26. setting is decreasing
27. setting is increasing

4. Operating instructions

4.1 Before use

Check the following points before using the kettle.

4.1.1 After the installation

Check that

- the kettle has been installed horizontally according to the installation instructions
- all connections (electricity, water and steam) are tight and correctly made.

4.1.2 Before the first use

- Clean the kettle thoroughly with warm detergent solution and remove the dust and dirt with a cloth. Dry all surfaces after cleaning.

4.1.3 Daily

Check that

- the kettle is in its upright and horizontal position. The kettle does not heat if it is tilted.
- the scrapers are correctly attached to the mixing tool. See "Positioning the mixing tool and scraper".
- the mixing tool has been locked in its place: locking part (one end of the handle) in the groove of the mixer axle, with the handle turned in a horizontal position. Secure fixing by trying to lift the tool out of the kettle by the upper blade.
- the steam generator has the right amount of water (a red water level indicator light on the control panel of the Culino kettle, normally water must be refilled a few times per year).

4.1.4 Quarterly

Check that the safety valve functions correctly:

1. Do the checking when the kettle is empty.
2. Check the water level of the steam generator.
3. Switch the kettle on by turning the green kettle on-off switch to the ON position.

4. Set the cooking temperature to 120°C by pressing the temperature increasing button marked with "+".
5. When the display indicates 120°C, check that the pressure gauge shows 1,0 bar pressure.

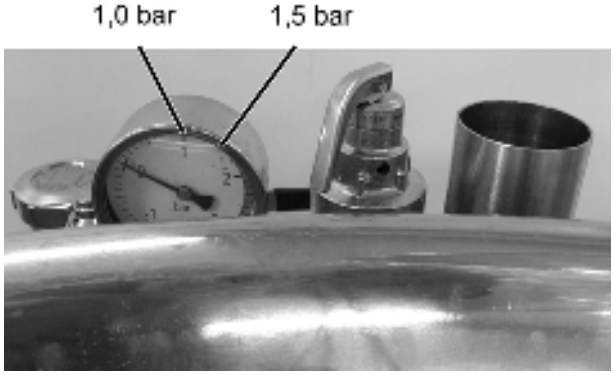

6. Keep the temperature increasing and decreasing buttons ("+" button and "–" button) simultaneously pressed until the display indicates 125°C and 1,5 bar. The safety valve should now open and release steam. Release both temperature buttons.



NOTE! On kettles with jacket cooling C2 the test button on the right hand side of the control pillar has to be kept pressed together with the + and the - buttons



1. kettle on-off switch
2. temperature adjustment buttons

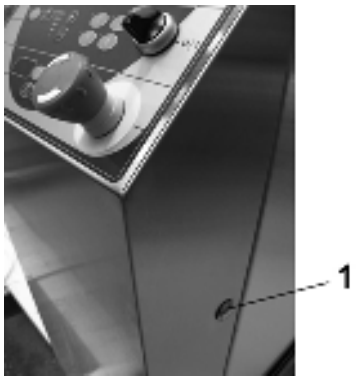

1.Test button



If the safety valve does not open at the latest when the pressure gauge indicates 1,5 bar, the power must immediately be switched off using the green on-off switch. Contact qualified service personnel. It is not allowed to use the unit before it has been checked.

The safety valve function must be checked at least four times per year. The manufacturer is not responsible for damage caused by neglecting the regular checking of the safety valve.

4.1.5 Yearly

- It is advisable to have the unit checked once a year by qualified personnel. Preventive checking is the best guarantee for operational reliability and saves breakdown costs.
- Depending on the hardness of water, descaling must be done by qualified personnel. If your kettle is equipped with a cooling attachment and it has been used very often, the descaling must be done more often than once per year. When doing the first descaling the technician can estimate when the following descaling must be done.

Fill out the form “Notes on service work” with information on service work which has been done according to the instructions. Maintenance work ensures the safe and reliable function of the kettle.

4.1.6 Checking the water level of the steam generator

It is not allowed to open the emptying/water level valve of the steam generator if the temperature of the steam jacket of the kettle is over +100°C. Watch out for releasing hot steam and water when you open the above mentioned valves.

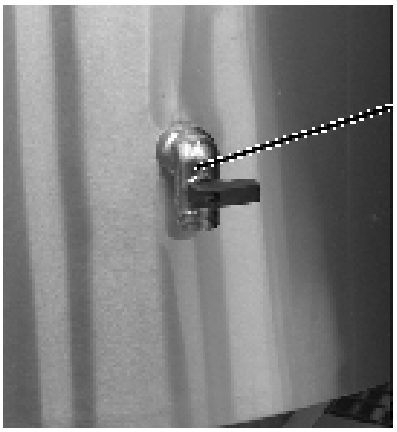

1. emptying/water level valve of steam generator

- Check that the kettle is in its upright position.
- Open the emptying/water level valve by turning the handle parallel to the valve.

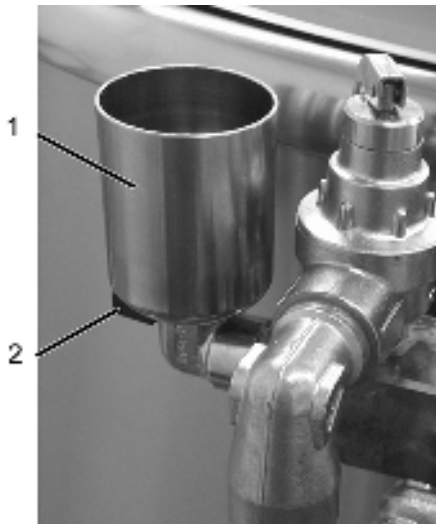

1. water inlet funnel
2. handle of the water inlet valve

- Open the water inlet valve, which is under the water inlet funnel, by turning the handle (2) parallel to the valve.
- Let water into the water inlet funnel. Stop filling water when water starts to drop out of the water level valve.
- Close the water inlet valve. Close the water level valve when water has stopped running out of it.

The kettle does not heat if there is not enough water in the steam generator. Add water if needed according to the instructions.

A red water level indicator light on the control panel displays when water must be added to the steam generator. If you sometimes use the cooling system (optional), water must not be added at all.

4.1.7 Total emptying of the steam generator

It is not allowed to open the emptying/water level valve of the steam generator if the temperature of the steam jacket of the kettle is over +100°C. Watch out for releasing hot steam and water when you open the above mentioned valves.

1. Open the emptying valve.
2. Tilt the kettle approximately 45°.
3. When water stops to flow out, tilt the kettle slightly forwards and backwards until water no longer flows out.
4. Return the kettle to the cooking position.
5. Close the emptying valve.

4.2 Operation

4.2.1 Cooking

The cooking temperature can be set with one degree accuracy between 0...120°C. The temperature of the steam jacket of the kettle is always at least the same as the room tem-

perature or the same as the temperature of the cooling agent, if the kettle is equipped with a cooling attachment (option).

Starting to cook

- Check that the emergency-stop button is not pressed down. The emergency-stop button can be released by turning it clockwise until it jumps up.
- Switch on the power by turning the green on-off switch to the right (the green signal lamp illuminates). The red water level indicator light goes off after some seconds. If the water level indicator light does not go off, add water to the generator according to instructions given in Chapter “Checking the water level of the steam generator”.
- Press once either one of the temperature adjustment buttons.
- Press again the temperature button and set the temperature. When you keep the temperature button pressed down, the temperature changes with one degree at a time.

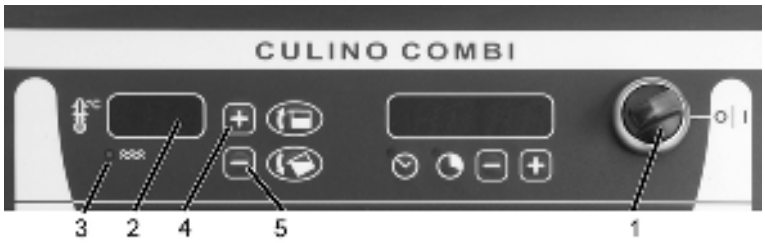

1. on-off switch
2. digital temperature display
3. low water level indicator light (on electrically heated models only)
4. temperature increasing button
5. temperature decreasing button

If the set temperature is higher than the actual temperature, the kettle starts to heat immediately.

Temperature display

The digital temperature display always indicates the temperature of the kettle. When you want to measure the temperature of the food, use a separate thermometer.

Mixing makes the temperature differences in different parts of the food more even.

Checking the set temperature

Press either one of the temperature adjustment buttons. The digital display indicates for five seconds the set temperature, after which the display switches back to the actual temperature of the kettle.

Changing the set temperature

1. Press once either one of the temperature adjustment buttons. The digital display indicates the set temperature (for five seconds).
2. Choose the temperature by pressing the temperature increasing or decreasing button. When you keep the temperature button pressed down, the temperature changes

with one degree at a time. Release the button when the digital display indicates the desired set temperature. After approximately five seconds the display switches back to the actual temperature of the kettle.

Stopping the cooking

Turn the green on-off switch lightly to the left. The green indicator light goes off and the kettle stops cooking.

The kettle tilts only if the kettle is switched on. Since the kettle chills slowly, you can stop cooking and begin the simmering by decreasing the set temperature to e.g. +70°C.

The cooking will automatically stop when the kettle is tilted. The cooking goes on automatically when the kettle is returned to an upright position.

4.2.2 Tilting the kettle

Open the safety lid of the kettle before tilting and ensure that there is enough space for tilting behind the kettle.

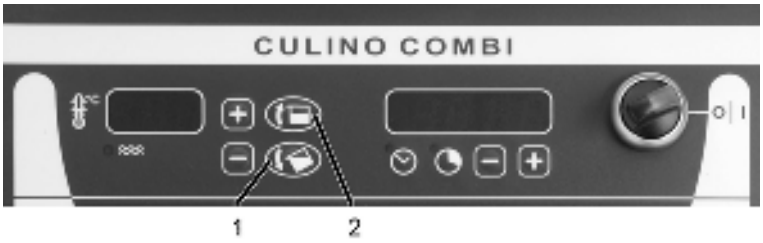

1. The kettle is emptied by pressing the tilting button
2. The kettle goes back to its upright position by pressing the upright position button.

For security reasons, the kettle tilts only when the tilting button is kept continuously pressed.

4.2.3 Filling water into the kettle (Culino 40-400)

Depending on the kettle version, the water supply fittings can consist of

1. a faucet (1)
2. a faucet (1) + a two-arm faucet with spray gun (2)
3. a spout for automatic water filling (3)
4. a spout for automatic water filling (3) + one-arm faucet with spray gun (4)

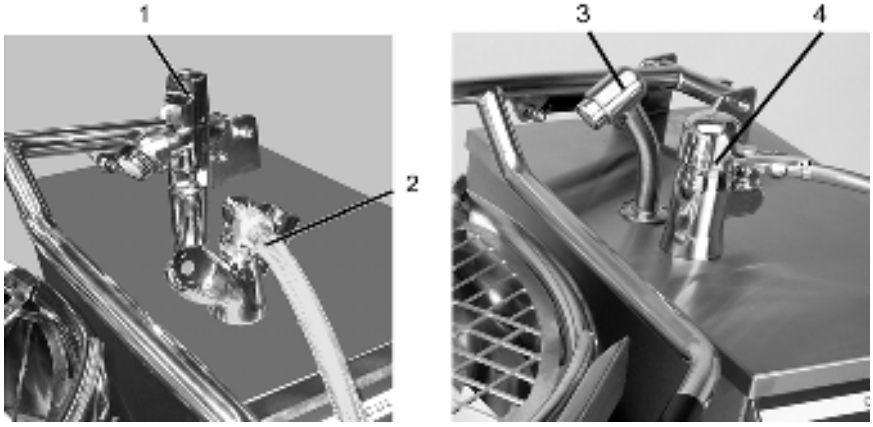

Use only cold tap water for cooking.

4.2.4 Mixer operation

The mixer operates only when the safety lid and the safety grid of the lid opening are attached and closed.

If one of the safety features has interrupted the operation of the mixer, a green indicator light in the control panel blinks to indicate the interruption.

When the cause of the interruption has been removed, the preset program can be continued from where it was interrupted.

Positioning the mixing tool and scrapers

Attach the scrapers by placing the pins on the mixing tool into the holes on the scrapers. After that turn the scraper into place by lif ting the scraper's lower part. Finally pull the scraper forward. The bevel (1) will on the lower scraper point upwards and on the side scraper away from the mixer axle.

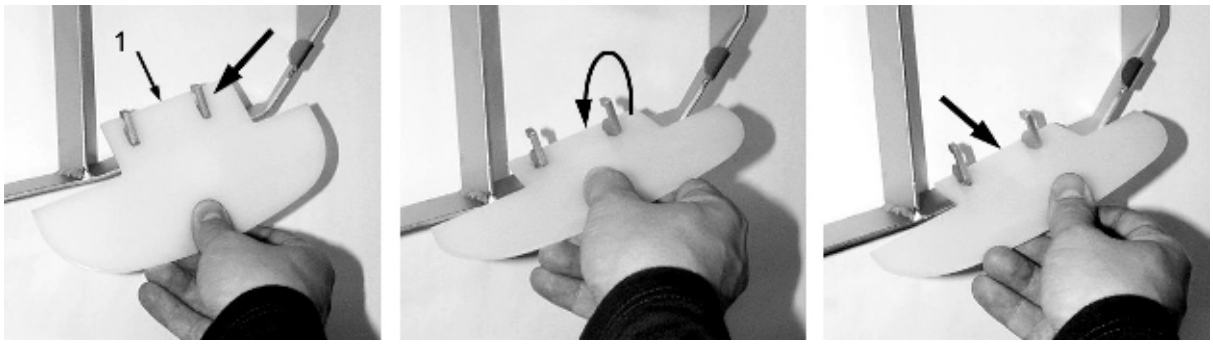

The mixing tool is equipped with 1-5 scrapers, depending on the size of the tool.

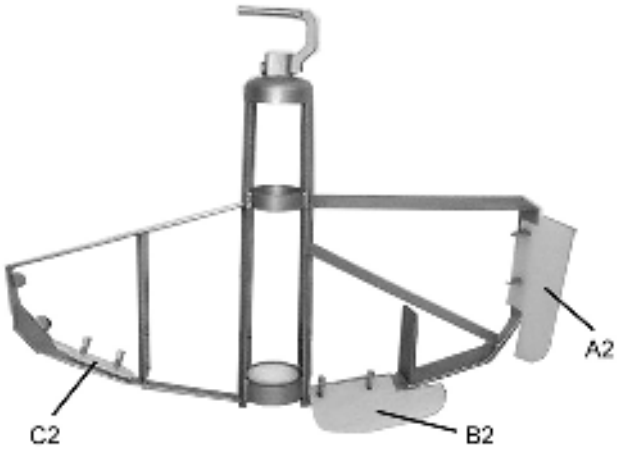

Scraper	40	60	80	100	150	200	300	400
Scraper A2	-	1	1	2	1	2	1	2
Scraper B2 (bottom)	-	-	-	1	1	1	1	1
Scraper C2 (bottom)	1	1	-	-	1	1	2	2

Scrapers are not needed when preparing la rge quantities of mashed potatoes or when kneading dough. Use scrapers in all other cooking modes to increase the efficiency of heat transfer and to help the cleaning of the kettle.

It is easiest to attach the mixing tool to the mixer axle when the kettle is in a tilted position. Push the ring on the mixing tool into the kettle's mixer axle and fit the mixing tool in place, while the lifting handle is straight so that the locking device of the lifting handle sets in the groove at the upper end of the mixer axle.





Then turn the handle aside.





Make sure that the mixing tool is locked in its place by trying to lift/pull it out of its place by pulling at the mixer blade, for example.

Safety lid and safety grid for lid opening

It is absolutely forbidden to use the mixer without the safety lid and the safety grid for lid opening (working safety regulations).

The safety lid and the safety grid for lid opening are to be attached as follows:

1. When the safety lid is closed, put the ends of the hinges into the oblong holes on the front edge of the safety lid.

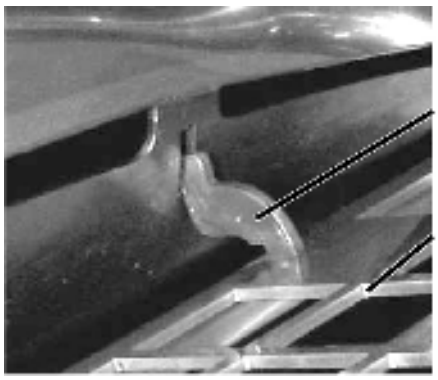

1. hinge
2. safety grid for lid opening

2. Turn the safety grid down to its place, the safety switch enables the operation of the mixer.
3. It is possible to put a stainless steel cover over the safety grid to decrease the steam outflow when cooking.



1. cover for lid opening

Opening the safety grid:

1. Turn the safety grid to an upright position, the slots in the hinges keep it in an open position. If the mixer is mixing, it will stop.



Closing the safety grid:

1. Lift the safety grid lightly upwards and turn it after that down over the kettle.
2. If necessary, switch the mixer on according to the instructions given below.

Opening of the whole safety lid:

1. Switch off the mixer if it is on.
2. Lift the safety lid by the black part of the lifting arm to its utmost position. The gas spring will keep it in the open position.
3. If the cover for the lid opening was on, it remains on the safety grid because of a locking peg.

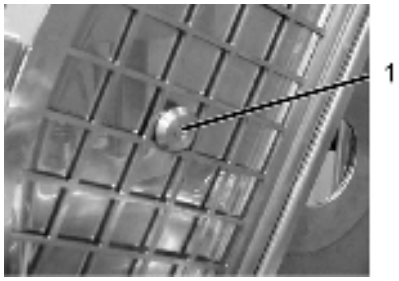

1. locking peg

Manual operation of the mixer

1. Ensure that the emergency-stop button is not pressed down. If pressed, release it by turning it clockwise until it jumps up.
2. Switch on the power by turning the green mixer on-off switch lightly to the right (the green indicator light illuminates).
3. Start the mixer by pressing the start-stop button. The mixer starts at the lowest speed.
4. Choose the desired mixing speed.
5. If desired, switch on the auto-reverse mode by pressing the auto-reverse button.

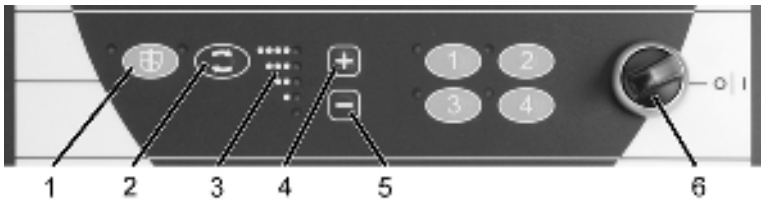

1. start/stop button
2. auto-reverse button
3. mixing speed indicator light
4. mixing speed increasing button
5. mixing speed decreasing button
6. mixer on-off switch

Operation of the pre-set mixing programs

The automatic mixing programs are pre-set and can not be changed. The programs will start immediately when the desired button is pressed. You can at any time directly switch over from one program to another program.

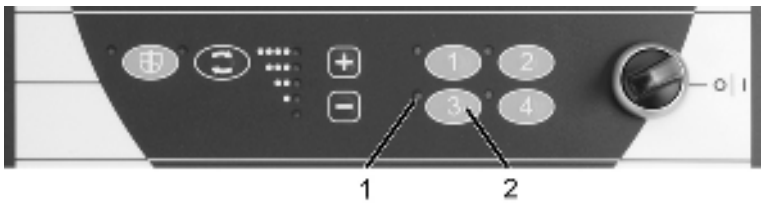

1. indicator light of pre-set mixing program
2. buttons of pre-set programs

Interrupting and continuing of mixing programs

The pre-set program can be interrupted by opening the safety grid or the safety lid. If the mixing program has been interrupted, the green indicator light of the interrupted program will begin to blink. When the safety grid and the safety lid are closed, you can continue the program from the point of interruption by pressing the same button.

Stopping the mixing and pre-set programs

The mixing and the pre-set programs can be interrupted alternatively by pressing the

- start/stop button (1)
- emergency-stop button (2)
- or by turning the mixer on-off switch (3) to the 0 position.

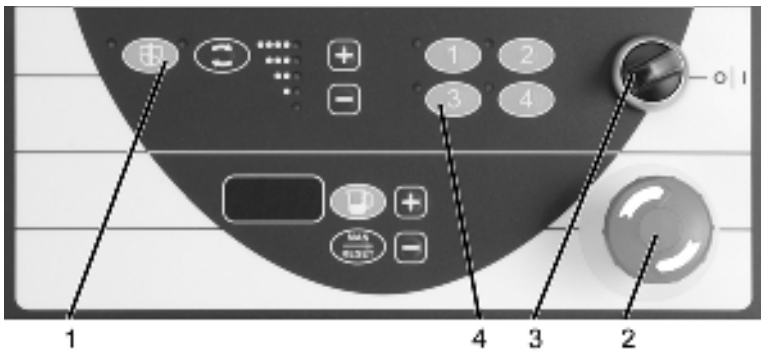

1. start/stop button
2. emergency-stop button
3. mixer on-off switch
4. buttons of pre-set programs

The mixing program can also be stopped by pressing once again the pre-set mixing program button while the program is running.

Mixing speeds

The five indicator lights to the left of the buttons of pre-set programs indicate the pre-set mixing speeds.

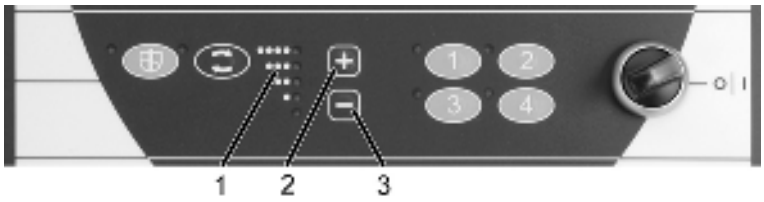

1. mixing speed indicator light
2. mixing speed increasing button
3. mixing speed decreasing button

The corresponding mixing speeds are:

1 = 20 rpm
2 = 40 rpm
3 = 60 rpm
4 = 80 rpm
5 = 110 rpm

Auto-reverse function

In spite of the speed selected, always 10 seconds clockwise and 5 seconds counterclockwise.

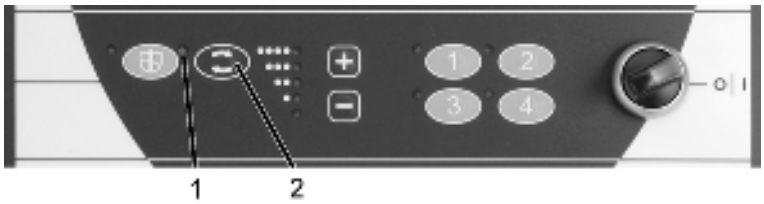

1. on-off light for auto-reverse
2. auto-reverse button

Description of pre-set mixing programs

The purpose of use, different phases of the program and the mixing speeds are shown in the following table.

Buzzer signal (not program 1):

- Between the program phases, a buzzer signal of three sequential periodical sounds will be heard for approximately 10 seconds.
- At the end of the program, a single periodical buzzer sound will be heard for approximately 10 seconds.

No. phase	Mode	Duration	Speed	Rev/direction	Other	Buzzer	Final buzzer
1	Soup		20 rpm	1,5 ccw/1,5 cw	pause 2 min	no	no
2.1	Universal program	7 min	80 rpm	1 cw/1 ccw		yes	
2.2		10 min	40 rpm	5 cw/2 ccw		yes	
2.3		30 min	20 rpm	5 cw/2 ccw			yes
3.1	Mashed potatoes		60 rpm	1 cw/1 ccw	3 times	no	
3.2		1 min	60 rpm	10 cw/2 ccw		yes	
3.3		5 min	80 rpm	10 cw/2 ccw		yes	
3.4		4 min	60 rpm	8 cw/2 ccw			yes
4.1	Dessert	2 min	80 rpm	6 cw/2 ccw		yes	
4.2		15 min	40 rpm	5 cw/5 ccw		yes	
4.3		20 min	80 rpm	5 cw/2 ccw			yes

Maximum amount of mixing



The turning force and mixing features of the mixer are measured to mix most food ingredients. There might although be food ingredients with a consistency that requires decreasing the kettle contents or adding liquid to improve the mixing result. The turning force is best in the range 20-60 rpm (1-3).

4.2.5 Manual cooling C1 (optional)

The cooling system is based on cold tap water which is circulating inside the steam jacket. Mixing and use of scrapers makes chilling more effective. The needed chilling time depends on the quantity of product, the temperature at the beginning and at the end of cooling, the flow and temperature of chilling water as well as mixing.

Starting the cooling

1. Set the temperature to 0°C.
2. Close the one-arm faucet by pressing the handle down.



3. Remove the spray gun from the cleaning hose by pulling the connector away from the spray gun. Connect the cleaning hose to the emptying/water level valve which is on the lower right front side of the kettle.

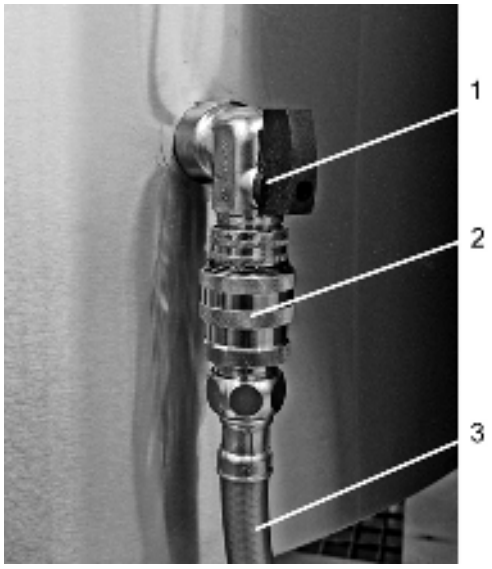

1. water level valve
2. connector
3. cleaning hose

4. Open the water level valve by turning the handle parallel to the valve.
5. Turn the 3-way valve in the safety block to the cooling position (downwards).



1. 3-way valve in cooling position

6. Open the water tap by turning the handle of the one-arm faucet to the right and raise upwards.

The digital display indicates that the cooling has started.

Stopping the cooling

1. Close the one-arm faucet by pressing the handle down.
2. Remove the cleaning hose from the emptying/water level valve.
3. Turn the 3-way valve to the cooking position (upwards).



1. 3-way valve in cooking position

4. Let the extra water run out of the s team jacket through the emptying/water level valve. Close the water level valve when the kettle is in an upright position and water stops flowing out.

It takes a few minutes to let the extra water run out of the steam jacket. If you first want to empty the kettle, close the water level valve before tilting. If the water level valve is open during the tilting, it is possible that the steam generator gets drained of water (see “Filling the steam generator”).

The kettle will not warm up properly if the water level is not lowered to the normal cooking level.

4.2.6 Automatic cooling C2 (optional)

The cooling system is based on cold tap water which is circulating inside the steam jacket. Mixing and use of scrapers makes chilling more effective. The needed chilling time depends on the quantity of product, the temperature at the beginning and at the end of cooling, the flow and temperature of chilling water as well as mixing.

Starting the cooling

Turn the kettle's on-off switch from position 0 to the left. The flow of chilling water into the kettle jacket begins. After a delay, depending on the kettle size, the discharging chilling water starts running from the kettle bottom's front edge into the floor drain.



1. on-off switch (in cooling position)
2. temperature display

You can follow the temperature decline on the digital temperature display. Using the mixer during cooling shortens the cooling time and helps the food obtain uniform temperature.

Turning the on-off switch repeatedly from position 0 to the cooling position will start the emptying delay once again. As a result, water pressure in the steam jacket opens the safety valve at the kettle's rear edge, from where the extra pressure of cooling water is discharged.

Stopping the cooling

Turn the kettle's on-off switch to the 0 position. The flow of chilling water will stop and the kettle jacket starts emptying the chilling water. During this emptying delay it is not possible to start the kettle heating, even if the on-off switch is turned to the I position. The jacket emptying delays for various kettles are as follows:

Kettle	min
Culino Combi 40, 60	3
Culino Combi 80	5
Culino Combi 100	6
Culino Combi 150	7
Culino Combi 200	8
Culino Combi 300, 400	10

In case the kettle's emergency-stop button is used during cooling or jacket emptying, the cooling function will be interrupted and extra water in the kettle jacket will make normal cooking impossible or very slow.

After releasing the emergency-stop button, the extra water can be removed in two alternative ways. One way is to turn the kettle's on-off switch for a while to the cooling position and then return it to the 0 position. This will cause the emptying valve to open and the emptying delay starts again. Another possibility is to open the steam jacket's water level valve located on the kettle's lower right side and wait until water stops flowing. Close the valve after that.

4.2.7 Operation of the timer (optional)

The timer allows you to start cooking at the required time and set the cooking duration. After the set cooking time has elapsed, the temperature of the kettle is automatically set to +70°C. The holding temperature is on until the kettle is switched off with the on-off switch. The digital display shows the actual time if the timer is not used, but the kettle has been switched on.

It is not possible to use the kettle if the timer is activated until the set time is reached or the timer has been switched off. When the timer is activated, a green light in the top left corner of the button is illuminated.

Setting and changing the time

1. Press the time increasing "+" and time decreasing "–" buttons at the same time for about two seconds until the hour display begins to blink.

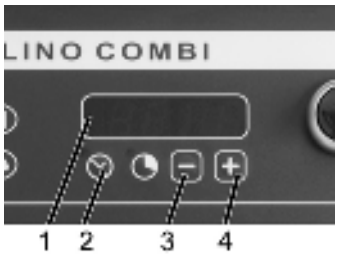

1. digital timer display
2. starting time programming button
3. time decreasing button
4. time increasing button

2. Set the right hour with the "+" and "–" buttons.
3. Press once the starting time button, the minutes start to blink on the timer display.
4. Set the right minutes with the "+" and "–" buttons.
5. Press once the starting time button, the set time will be memorized and the timer starts counting.

Setting and changing the starting time

Set the required cooking temperature first.

- Press the starting time button for two seconds until the hours start to blink on the display.
- Set the starting time (hour) with the "+" and "–" buttons.
- Press once the starting time button, the minutes blink on the display.
- Set the starting time (minute) with the "+" and "–" buttons.
- Press once the starting time button. The starting time will be memorized.

When you use the timer, ensure that the time on the display and the set starting time are right and you have activated the starting time program (the green is light illuminated).

Checking the set starting time

Press once the "–" button. The display shows the set starting time. After a few seconds the timer display reverts to the actual time.

Setting and changing the cooking time duration

1. Press the cooking time programming button for two seconds, the hours start to blink on the display.

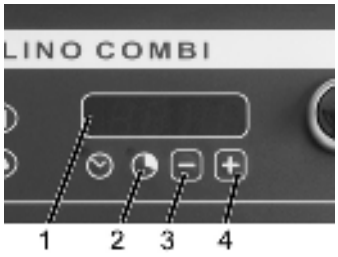

1. digital timer display
2. cooking time programming button
3. time decreasing button
4. time increasing button

2. Set the hours with the "+" and "–" buttons.
3. Press once the cooking time programming button, the minutes start to blink on the display.
4. Set the minutes with the "+" and "–" buttons.
5. Press once the starting time button. The starting time will be memorized.

When the set cooking temperature is reached, the pre-set cooking time starts to elapse and the display begins to show the cooking time which is still left.

When the set cooking time is reached, the temperature is automatically set to + 70°C and the display shows “Hold”.

When you use the timer, ensure that the time on the display and the set starting and cooking times are right and you have activated the starting time program and the cooking time program (green indicator light illuminated).

Checking the duration of the cooking time

Press once the "+" button. The display shows the pre-set cooking time in hours and minutes. After a few seconds the display reverts automatically to the actual time.

4.2.8 Automatic water filling (option)

A desired amount of cold water can be dispensed to the kettle by the automatic water dispenser in the following way:

- water filling is manually kept on until the desired amount of litres appears on the display of the control unit

or

- automatic water running stops when the amount of litres set beforehand in the control unit are achieved.

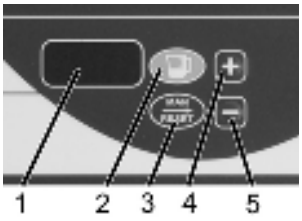

1. 3-digit display
2. automatic flow on/off
3. manual flow + reset
4. setting is increasing
5. setting is decreasing

Basic mode

- The appliance is on when the kettle on-off switch is on; 0 appears in the last digit's position.
- Decimal point is illuminating.
- The set amount of filling has been achieved. The values are 0.
- If the function of the appliance is interrupted by switching off the control voltage, the reswitching of voltage will always set it to this basic mode.

Manual water filling

- Filling starts when the MAN/RESET button is pushed and held down for the duration of filling.
- The display is updated with an accuracy of one litre as long as the button is held down.
- The achieved value in litres is shown on the display for 10 seconds after stopping the filling. Then 0 appears on the display.
- If you want to continue filling within the mentioned time, the value on the display will continue increasing.

Automatic filling of water

- Set the desired amount by pushing the "+" button (4). The set value appears on the display.
- The value can be decreased by using the "–" button (5).
- The value is shown on the display for 10 seconds, whereafter the set value will be 0.
- Start the filling by briefly pushing the automatic flow on/off button while the set value is illuminating on the display.
- After starting the filling function, the display will cumulatively show the amount of water filled (in litres) and the flow stops automatically when the set value has been achieved. The set value is reset to zero.
- The amount of water flown will stay on the display and the appliance reverts to the basic mode by pushing either the automatic flow on/off or MAN/RESET button.

Interrupting the automatic filling of water

- The function is interrupted by pushing the automatic flow on/off button.
- The achieved value stays on the display and the decimal point is blinking.
- The set value is saved in the memory.
- In the interrupted mode, the setting can be changed using the "+"/"–" buttons.
- The water dispenser reverts to the basic mode by pushing either the automatic flow on/off or MAN/RESET button.

- If the function is interrupted by pushing the emergency-stop button, the appliance reverts to the basic mode and the settings must be done again.

Continuing the automatic water filling after interruption

- The filling will continue from the achieved value up to the set value by pushing the automatic flow on/off button.
- After this the decimal point will illuminate continuously.

Error in automatic water filling

- If there is an error in flow measurement or if water does not flow, the value on the display blinks.
- The water dispenser reverts to the basic mode by pushing either the automatic flow on/off or MAN/RESET button.

Settings

Maximum filling amount

- The maximum filling amount has been set in the factory according to the kettle size.
- The setting is changed by first pushing the "–" button and immediately after that the "+" button for 5 seconds, after which the display value starts to blink. The new setting value according to the kettle size is set using the "+"/"–" buttons. The maximum set value is 400 litres.
- The set value is saved if the setting is not changed in 5 seconds.

Calibration of flow measurement

- Basic calibration has always been done in the factory, so normally it need not be done again.
- If, however, calibration is needed, first push the MAN/RESET button and immediately after that the "–" button for 5 seconds, whereafter the value 855 starts to blink on the display.
- To decrease the flow, push the "–" button, so the value decreases. To increase the flow, push the "+" button, so the value increases. The amount of flow must be checked by pouring 5 litres of water into a measuring vessel.
- The set value is saved if the value is not changed within 5 seconds.

4.3 After use

4.3.1 Cleaning the kettle



Use of a high pressure hose for cleaning of the kettle is forbidden.

Note that it is not allowed to spray the air inlets or the control panel with water when cleaning the kettle with a spray gun.

Always clean the unit carefully immediately after use, considering the hygienic aspects. Cleaning is more easy to do and needs less water in this way.



Recommended tools for cleaning:

- special cleaning detergents for stainless steel
- nylon brush
- soft rubbing sponge (white)
- other materials meant for stainless steel which do not scratch the surfaces of the kettle



Tools not allowed for cleaning:

- high pressure hose
- all metallic tools
- rough rubbing sponge (green)
- steel wool
- abrasive detergents

Cleaning procedure:

1. Chill the kettle with cold water
2. Scrape the dirt with a plastic scraper.
3. Spray detergent in the kettle, brush and wash clean with a water hose
4. Dry the kettle

Clean the outer parts of the kettle using running water only if necessary. Do not use water more than is necessary. Cleaning with a damp cloth will often be enough.



All optional extras of the kettle such as strainer plates, mixing tools and scrapers, cooking baskets and parts of the safety lid can be washed in a dishwasher.

The dosing and impact time instructions for cleaning detergents must be followed - e.g. exceeding the impact time for foam cleaning detergents in combination with salt residues has been observed to cause severe spot corrosion even on stainless steel.

The manufacturer does not take any responsibility for possible damage caused by not following the instructions above.

Using the different parts of the safety lid

The safety lid consists of the following parts: the solid lid, the safety grid for the lid opening and the cover for the lid opening. All these parts can be washed in a dishwasher.

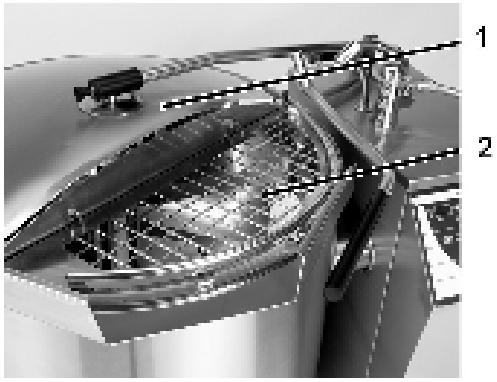

1. solid lid
2. safety grid for lid opening



1. cover for lid opening

Taking the safety lid apart

1. Close the lid.
2. Remove the cover of the safety grid by raising it upwards.
3. Remove the safety grid by raising it first to an upright position (open position) and then simultaneously raising and pulling it towards yourself.
4. Remove the solid lid by pulling the interlock lock, at the same time holding the lid's lifting handle with the other hand.



Fitting the parts of the lid

1. Put the solid lid over the kettle and put the lifting arm down so that the guide cone meets the hole on the arm. Also make sure that the smaller guide cone meets the counter hole on the arm. Ensure that the lock pin sets in its lowest position.

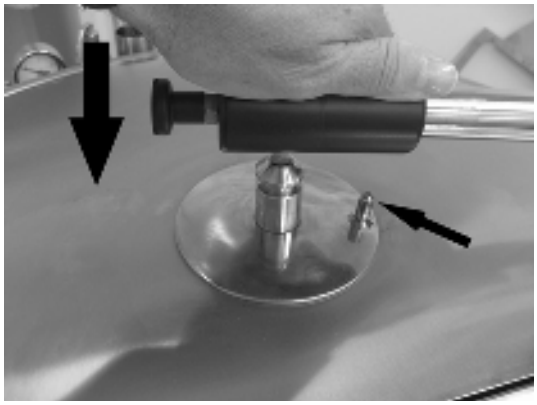

2. Position the safety grid by putting the ends of the hinges into the oblong holes which are on the front edge of the safety lid and then lowering the grid down on the kettle.

4.3.2 Treatment of stainless steel

The following table contains the most typical problems encountered in the treatment of stainless steel and their solutions.

Note that some substances mentioned in the table can damage the stainless steel surface if they are used too long or they are too strong. Therefore, the instructions given in the schedule must be strictly followed.

Effect	Cause	How to avoid/remove
Little white spots on the bottom of the kettle	Salt has been added to cold water.	Add salt always into boiling water or when the food is ready. Clean with acetic solution (0,5 dl vinegar/1 l water), heat appr. 1/2 hours, brush and rinse.
Grey-white blotches and spots, calcareous deposits	Hard water containing calcium and magnesium salts.	Clean with acetic solution (1 dl vinegar/1 l water), heat approx. 1/2 hours, brush and rinse.
Brown spots	Dirt from food ingredients, steel particles coming from outside.	Clean with acetic or alkaline solution according to the cause.
"Rainbow colours"	Sudden temperature change.	Totally harmless, disappears in use.
Tightly stuck food	Too high cooking temperature.	Soak water in the kettle and cook diluted alkaline solution according to instructions given with the detergent. Reduce cooking temperature.
Blue coating	Substances containing carbohydrate or old coffee and tea spots.	Sometimes hard to remove. Soak water in the kettle and cook diluted alkaline solution according to instructions given with the detergent.
Firmly adhered label or sellotape	Adhesive from labels or sellotape	Rub the adhesive with a cloth dipped in cooking oil. Do not scratch the surface.

4.3.3 Notes on service work

Kettle/kettle group_____ Date of installation_____

Checking the safety valve four times per year:

Date	Checked by	Notes	Date	Checked by	Notes

Yearly maintenance:

Date	Checked by	Notes	Date	Checked by	Notes

Descaling:

Date	Checked by	Notes	Date	Checked by	Notes

5. Installation

5.1 Before installation



Please observe the following instructions and warnings when planning and carrying out the transport and installation of the kettle in order to reduce the risk of damage, failure or injury. This applies to forwarders, transport personnel, installation professionals and end-users alike. Not following the instructions might cause damage to the units and personnel.

5.1.1 Transport and reception

The unit must be transported in its own package to avoid transport damage. It is forbidden to load any heavy packages on the unit during transport and storage.

The unit is not stable until bolted down to the floor. For this reason it is imperative not to operate or tilt the kettle until it is bolted down according to the installation instructions. When the kettle is removed from its transport pallet, it must be supported to prevent it from falling before it is fixed to the floor. If the kettle falls down, this may cause damage to the unit and put personnel at risk.

The consignee of the kettle must check the unit immediately after transport and if any damage is detected, it must be noted on the bill of freight. If this is neglected, all transport damage detected later on (except those covered by normal product guarantee), will be repaired at the customer's cost.

5.1.2 Storage

The unit must be stored in a dry place where the temperature is between + 0° and 40°C. The unit must remain in its own package during storage.



If the unit is stored on a construction site, special care must be taken not to damage the unit when carrying out other construction work.

- Protect the outer surfaces of the unit from scratches and knocks.
- Protect the unit from construction site dust.
- Protect the unit from welding, grinding and abrasive cutting wheel sparks. These might later cause rust spots on the stainless steel surfaces of the unit.

5.1.3 Facilities

The kettle can be used in a normal, air-conditioned professional kitchen. The room temperature of the installation place must not exceed +40°C and the relative humidity must be less than 80% (condensation on surfaces not allowed to occur). If the temperature of the facility in winter conditions is below 0°C, the steam generator of the kettle must be drained and the kettle must be emptied to avoid damage caused by freezing. The kettle's pipes and solenoid valve bodies must be emptied at the same time.

5.1.4 Unpacking the unit

The kettle is transported in its own package as near the installation place as possible before final unpacking. Remove the plastic foil wrapped round the kettle after the installation just before the first use of the kettle.When unpacking all packing material must be sorted and disposed of according to local recycling regulations.

5.1.5 Industrial safety during installation



Beware of sharp edges of sheet constructions in the kettle pillars when installing the unit.

Do not switch the power on, if the unit installation area is wet or moist.

5.2 Installation

Check before the installation from the installation drawing that there is enough space behind the kettle for tilting. Check also the location of the floor drain.

The kettle can be installed in the following two ways:

- on subsurface installation frames, frames cast into the floor
- on surface installation frames, frames fixed between the kettle and the floor

Remove the front panels of the control pillar and support pillar when installing. It is recommended to put wooden slats below the kettle axles when raising the unit during the installation to avoid possible falling of the kettle. If you are installing a kettle group, first separate the kettles. Begin the installation with the left-hand kettle and do not forget to support the right-hand kettle after removal from the left-hand temporary support.

5.2.1 Installation on subsurface frames cast into the floor

The optional subsurface installation frame is to be correctly positioned before casting. The frame should be installed in a horizontal position and fixed so that it will not move during the casting. The top of the installation frame must be approx. 30 mm above the finished floor surface. The junction between the floor and the frame is to be covered with flooring material up to the level of the installation frame as shown in the picture below.

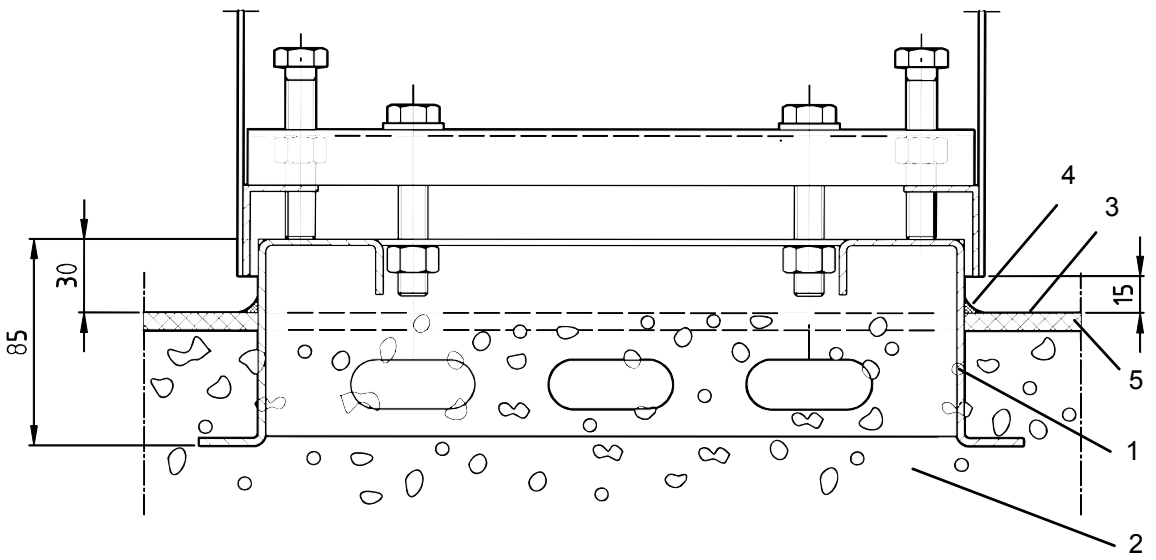

1. Installation frame
2. Concrete casting
3. Finished floor surface
4. Silicone mastic
5. Acrylic filler

Place the kettle on the installation frame and adjust to a horizontal position with the adjusting bolts which are in the corners of the pillars. When the kettle is in a horizontal position it must be fixed by screwing the nuts on the two fixing bolts of the installation frame. Tighten the adjusting nuts carefully. Do not seal the space between the kettle pillars and installation frame as there must be enough change of air.

5.2.2 Installation on surface installation frames

The optional installation frame is to be installed according to the installation drawing. If the floor is not even, it might be necessary to straighten the installation frame to a position nearer to the horizontal by putting some stainless steel spacers between the frame and the floor, so that the adjustment range of the pillar is sufficient.

The junction between the installation frame and the floor is sealed with silicone or similar.

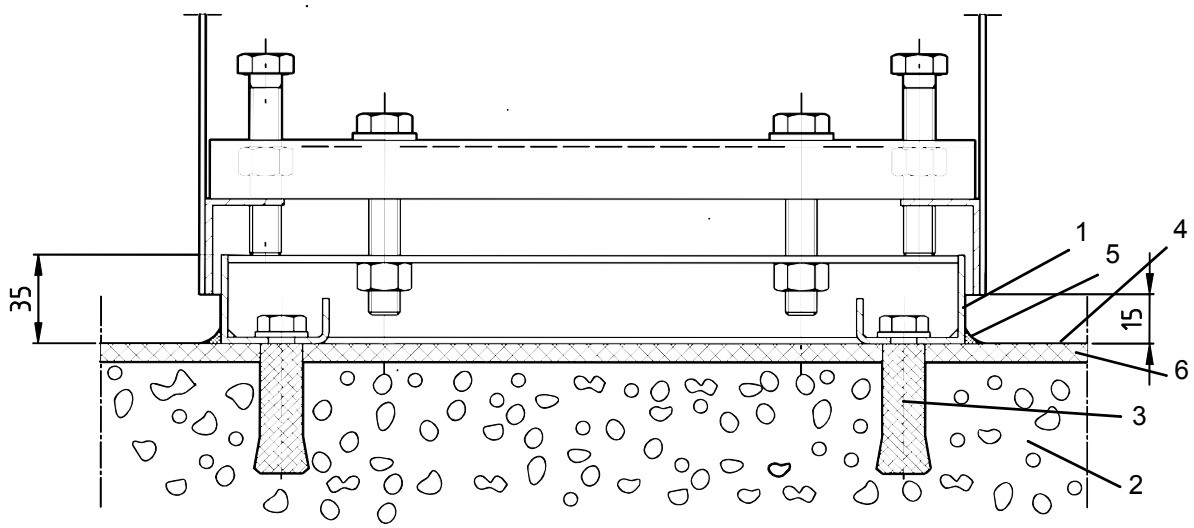

1. Surface frame
2. Concrete casting
3. Fixing bolt for surface frame
4. Finished floor surface
5. Silicone mastic
6. Acrylic filler

Fixing bolts of the surface in stallation must be chosen acco rding to the floor material. Recommended type is a UKA 12x200 chemical bolt, which is suitable for different floor materials. Alternatively expansion-shell bolts or equivalent can be used.

Place the kettle on the surface installation frame and adjust to a horizontal position with 4 adjusting bolts which are in the corners of the pillars. When the kettle is in a horizontal position it will be fixed by screwing the nuts on the two fixing bolts of the surface installation frame. Tighten the fixing nuts careful ly. Do not seal the space between the kettle pillars and surface installation frames, as there must be enough change of air.

5.3 Electrical and water connections

The electrical and water connections for each kettle (single or gro up) are made through the floor to the right-hand kettle pillar according to the inst allation drawing. The water pipes must not rise more than 100 mm from the floor surface.

5.3.1 Electrical connection

Connections are to be done according to the installation drawing and the electric diagram.



The kettle is equipped with a decoupling switch, which separates the kettle totally from the electrical network.

5.3.2 Water connection

The water connection is to be done according to the installation drawing. Connections to the water tap are to be fitted with one-way and shut-off valves (not included in delivery). The cold water connection is of size Ø 15 mm (G 1/2") and the warm water connection of size Ø 10 mm (G 3/8").

Quality requirements for water used for filling the steam generator

- Water conductivity should be below 1000µS/cm. Already when the conductivity is over 500µS/cm, a water analysis is recommended.
- Maximum chloride concentration allowed is less than 60 mg/l.
- Maximum chlorine concentration allowed is less than 0,2 mg/l.
- The pH value of the water should be between 6,5 and 9,5.
- Unit damages caused by chloride, chlorine or pH values exceeding the stated limits are not covered by manufacturer warranty.

Extreme water conditions

When extreme water conditions not fulfilling the requirements above exist, filters and water treatment devices should be installed in order to ensure proper water quality for steam generator filling. Specified water quality is a mandatory requirement for proper function of the unit and for avoidance of corrosion. When extreme water conditions are at hand, a water quality analysis must be carried out. Depending on the results of the analysis, needed filters and water treatment devices are installed by the customer. The most common filters and treatment equipment are:

1. Particle filter

A 5-15µm particle filter is recommended when water contains sand, iron particles or other suspended matters.

2. Active carbon filter

An active carbon filter must be used if the chlorine level exceeds 0,2 mg/l.

3. Reverse osmosis system

A reverse osmosis system must be used if the chloride concentration exceeds 60 mg/l. This is very crucial in order to avoid corrosion.

4. Water softener

If a high level of scale build-up is experienced, a water softener is needed. H+ Ion Exchanger or Kleensteam are recommended systems. Sodium ion exchangers must not be used because of problems caused by high salt content.

5.4 Ventilation

The heat and steam load of the kettle must be taken into account in the kitchen's ventilation plan. A ventilation hood must be installed above the kettle, because plenty of steam is released when the kettle lid is opened. When dimensioning the ventilation hood, the space requirement for opening the lid must be taken into account (see installation drawing).

5.5 Other installations

In case the combi-kettle being installed is provided with a self-control option (HACCP), and it is taken into use, the data cabling and the installation of the program must be carried out according to separate instructions.

5.6 Adjusting the tilting

Ensure that the kettle pillars are in a horizontal position. If not, adjust according to the installation instructions. Ensure that the rim of the kettle also is horizontal. If not, adjust the tilting as follows.

The adjustment is done from the lower mounting point of the tilting motor as follows:

1. Open the locking screw
2. Open the locking nut.

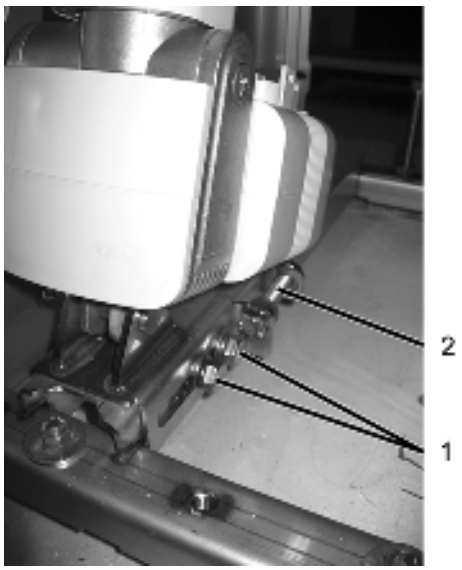

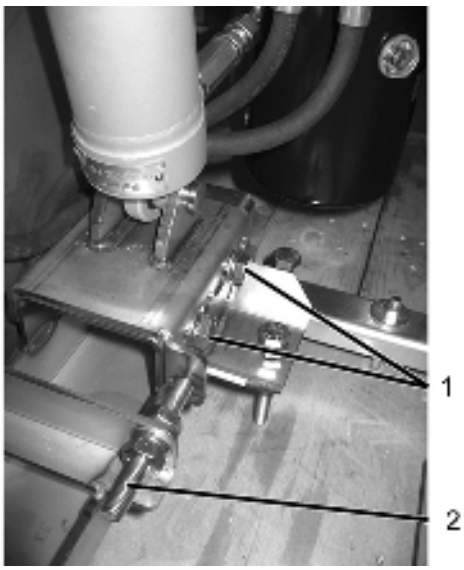

Culino Combi 40-200 l *Culino Combi 300 l, 400 l*

1. locking screw
2. adjusting screw

3. Adjust with the adjusting screw which is inside the U-profile.
4. Lock with the screw and tighten with the nut.
5. Finally check that the roller plunger of the tilting limit switch trips when the kettle is in an upright position.

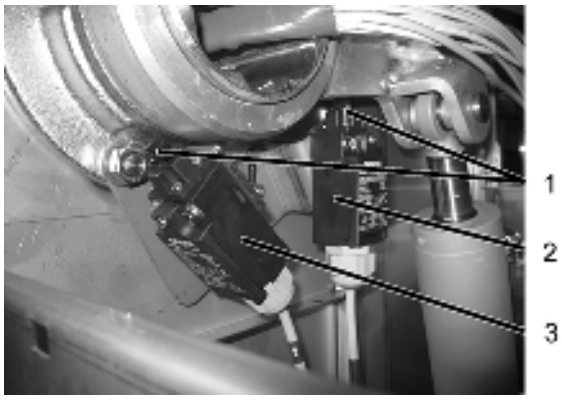

1. roller plunger
2. tilting limit switch - cooking position
3. tilting limit switch - extreme position

5.7 Testing the kettle

Do the following measurements and checks before taking the kettle into use.

5.7.1 Filling the steam generator

Before the kettle is switched on, the steam generator must be filled with water.

Do the following:

- Check that the kettle is in its upright position.

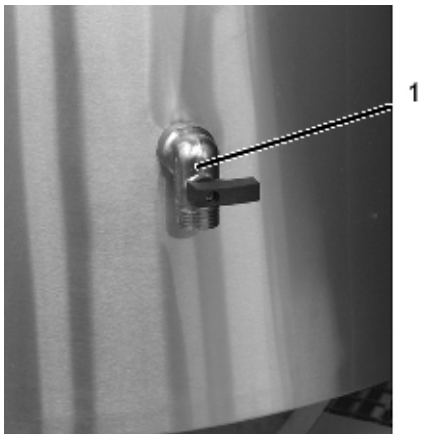

1. emptying/water level valve of steam generator

- Open the emptying/water level valve by turning the handle parallel to the valve.

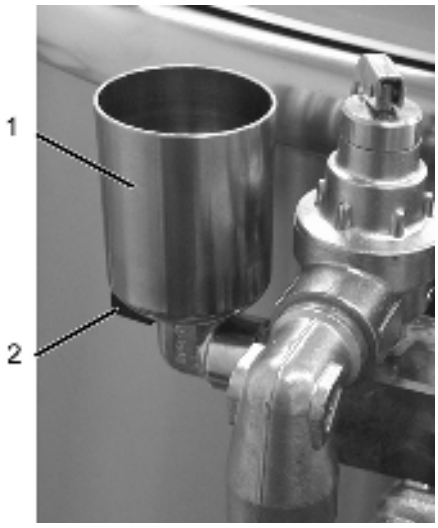

1. water inlet funnel
2. handle of the water inlet valve

- Open the water inlet valve, which is under the water inlet funnel, by turning the handle parallel to the valve.
- Let water into the water inlet funnel. Stop filling water when water starts to drop out of the water level valve.
- Close the water inlet valve. Close the water level valve when water has stopped running out of it. Now the steam generator is filled up to the maximum level.

Overfilling might prevent proper warming of the kettle. Thanks to the steam condensing system, the steam generator requires filling only a few times per year. Depending on the use of the kettle it will be 2-4 times per year. If the kettle is often used at low temperatures less than 100°C, water must be added to the steam generator more frequently. This is caused by the closing temperature of the automatic vacuum valve.

A red water level indicator light on the control panel displays when water must be added to the steam generator. When the indicator light illuminates, the kettle does not warm up. This protects the heating elements. Add water according to instructions. The indicator light switches off, when the minimum water level has been reached. Water is needed in the steam generator as follows:

Model	
Culino 40, 60	14 l
Culino 80, 100	15 l
Culino 150, 200	21 l
Culino 300, 400	37 l

Do not leave the water level valve, the emptying valve of the steam generator, the safety valve and the water inlet valve open when the kettle heating is on. The discharging steam might cause burns or other damage.

5.7.2 Preventing the scale build-up

Hard or otherwise low-quality water can cause scale or other build-ups on the heating elements. The build-up can damage or destroy the heating elements. Under bad water conditions, use of purified water is recommended for the steam generator in order to protect the boiler and heating elements from damage.

5.7.3 Checking the safety valve

Do the following measurements in order to check the safety valve:

1. Do the checking when the kettle is empty.
2. Check the water level of the steam generator.
3. Switch the kettle on by turning the green kettle on-off switch to the ON position.
4. Set the cooking temperature to 120°C by pressing the temperature increasing button marked with "+".
5. When the display indicates 120°C, check that the pressure gauge shows 1,0 bar pressure.

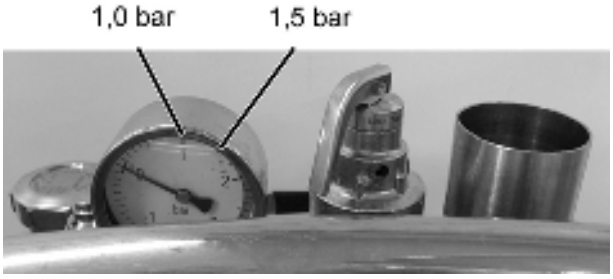

6. Keep the temperature increasing and decreasing buttons ("+" button and "–" button) pressed at the same time until the display indicates 125°C and 1,5 bar. The safety valve should now open and release steam. Release both temperature buttons when the safety valve has opened.

NOTE! On kettles with jacket cooling C2 the test button on the right hand side of the control pillar has to be kept pressed together with the + and the - buttons.



1. kettle on-off switch
2. temperature adjustment buttons

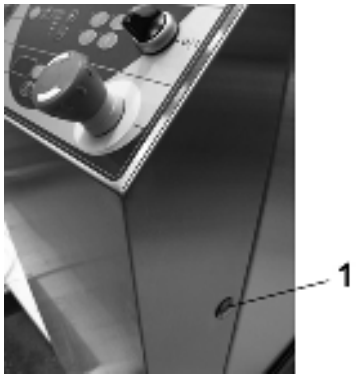

1. Test button



If the safety valve does not open at the latest when the pressure gauge indicates 1,5 bar, switch off the power using the green on-off switch and contact qualified service personnel. It is not allowed to use the unit before it has been checked.

The safety valve function must be checked at least four times per year. The manufacturer will not take responsibility for damage caused by neglecting the regular checking of the safety valve.

THE KETTLE IS NOW READY FOR USE!

5.8 Testing the mixer

The basic conditions for the perfect function of the mixer are that the kettle is correctly fixed to the floor according to the installation instructions. The kettle and the kettle pillars must also be in a horizontal position.

5.8.1 Checking the functions

Switch on the mixer by pressing the start/stop button. Check the following functions:

- the mixer is mixing at the lowest speed and only the lowest mixing speed indicator light is illuminated
- the mixer rotates clockwise
- press the auto-reverse button
- ensure the auto-reverse function, approx. 10 seconds clockwise and approx. 5 seconds counter clockwise
- try all rotating speeds by pressing the buttons to increase and decrease mixing speed ("+" and "–" buttons)
- try all the four pre-set mixing programs

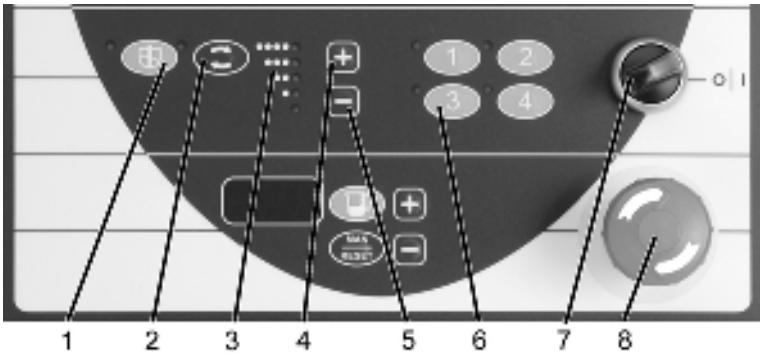

1. start/stop button
2. auto-reverse button
3. mixing speed indicator light
4. mixing speed increasing button
5. mixing speed decreasing button
6. buttons of pre-set programs
7. mixer on-off switch with indicator light
8. emergency-stop button

You can find the speeds and the pre-set programs in the section describing the mixer.

5.8.2 Checking the safety equipment

The mixer must stop when the safety grid or the lid itself is removed. If a pre-set program was on, the indicator light near the program button blinks. The operation will continue, when the lid and safety grid are replaced and the same program button is pressed again.

The mixer must stop immediately when the emergency-stop switch is activated. The switch is released by turning it clockwise until it jumps to its upper position. After this the mixer can be restarted.

5.9 Combination of machines

When the kettle is connected to a closed loop cooling system, a combination of machines as specified in the machinery directive is created for which, at commissioning, a signed declaration of conformity must be provided covering the combination of machines.

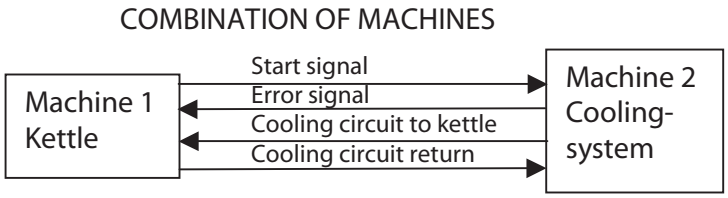

6. Troubleshooting

MALFUNCTION	POSSIBLE CAUSE	WHAT TO DO
The kettle does not heat	The timer function is activated if the kettle is equipped with a timer	Switch off the timer function according to instructions
	The emergency-stop switch is activated	Release the emergency-stop switch by turning it clockwise
	The kettle on-off switch is not in the ON position	Turn the on-off switch to the ON position
	The fuses in the main fuse box are blown/triggered	Change/excite the fuses
	The kettle is not returned to an upright position after tilting	Press the tilting button until the kettle is in a totally horizontally position
	Electric kettle: Not enough water in the steam generator, water level indicator light illuminated	Check and add water to the steam generator according to instructions
	Steam kettle: Shut-off valve of the steam input is closed	Open the valve
	Other technical fault	Contact qualified technical personnel
Heating of the kettle is slow	Electric kettle: Too much water in the steam generator	Check the water level of the steam generator according to the instructions by opening the water level valve.
	Steam kettle: Condensate water gathered in the steam jacket has not been emptied	Remove the condensate by opening the emptying valve which is in the steam jacket
	Steam jacket of a kettle equipped with a cooling system is full of cooling water which has not been emptied.	Remove the chilling water by opening the water level valve (electric) or the emptying valve for condensate (steam)
	On a kettle equipped with a cooling system air cannot flow out of the steam jacket because the 3-way valve of the cooling is in a wrong position.	Check that the handle of the 3-way valve in the safety block is turned upwards
	There is air in the steam jacket which does flow out because the automatic vacuum valve does not function.	If the air does not exit through the automatic vacuum valve, contact qualified technical personnel
	One of the fuses in the main fuse box is blown/triggered	Change/excite the fuse
	Other technical fault	Contact qualified technical personnel
The kettle does not tilt	The emergency-stop switch is pressed down	Release the emergency-stop switch by turning it clockwise
	The kettle on-off switch is not in the ON position	Turn the kettle on-off switch to the ON position
	Other technical fault	Contact qualified technical personnel

The mixer does not start	The emergency-off switch is pressed down	Release the emergency-stop switch by turning it clockwise
	The mixer on-off switch is not in ON position	Turn the mixer on-off switch to the ON position
	The mixer start-stop button has not been pressed	Start the mixer by pushing the start-stop button
	The fuses in the main fuse box are blown/triggered	Change/excite the fuses
	Other technical fault	Contact qualified technical personnel
The mixer does not start, indicator light on the control panel blinks	The safety lid and the safety grid for the lid opening are not on the kettle	Place the safety lid and safety grid for lid opening on the kettle and restart
	Other technical fault	Contact qualified technical personnel
The mixer stops during mixing	A pre-set program including stopping of the mixer is in use	Check if a pre-set program is in use
	The stuff to be mixed is too thick or there is too much contents in the kettle	Make the contents of the kettle thinner or reduce the amount and restart.
	Other technical fault	Contact qualified technical personnel
The mixer stops during mixing, indicator light on the control panel blinks	The safety lid or the safety grid for the lid opening has moved	Place the safety lid and safety grid for lid opening on the kettle and restart
	Other technical fault	Contact qualified technical personnel

When you contact the service personnel, give the following information for the unit in question:

- what is the type and model of the unit
- what is the serial number of the unit and the date the unit has been installed
- a short description of the fault
- what happened/was done immediately before the fault occurred

8. Technical specifications

Installation drawing L00130 B3

Installation dimensions K02459 A3

Installation drawing L00131 C3

Installation dimensions K02226 C3

Text L00137 A4

Installation drawing L00130 B3

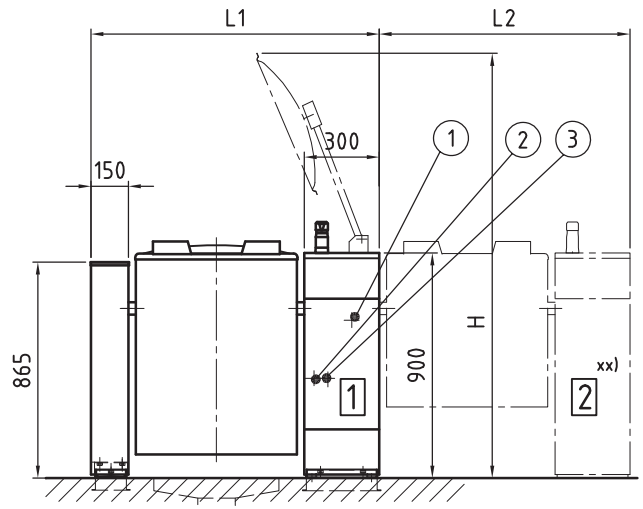

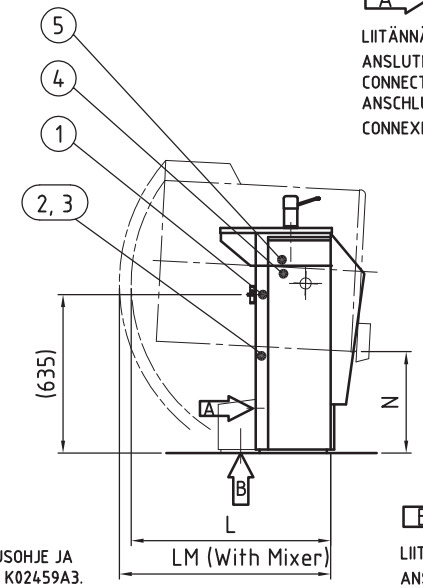

A

LIITÄNNÄT TAKAAPÄIN.
ANSLUTNING BAKIFRÅN.
CONNECTIONS FROM REAR.
ANSCHLUSS VON HINTEN.
CONNEXIONS DERRIÈRE.

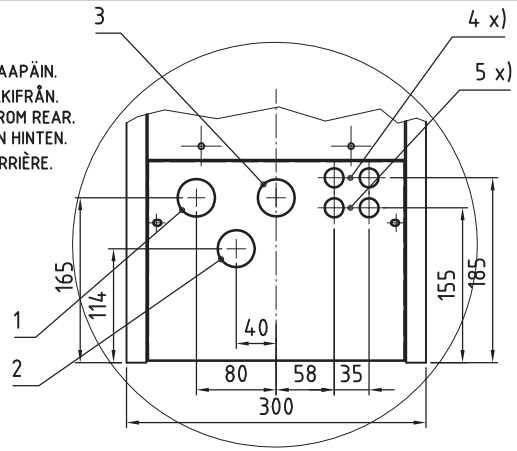

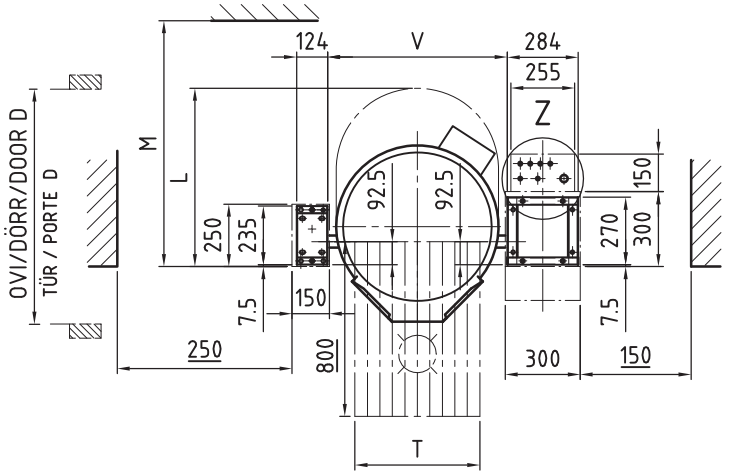

HUOMIOI MYÖS ASENNUSOHJE JA PIIRUSTUS L00137A4 + K02459A3.

IAKTTAG ÄVEN INSTALLATIONS-ANVISNINGEN OCH RITNINGEN L00137A4 + K02459A3.

THE INSTALLATION INSTRUCTIONS AND DRAWING L00137A4 + K02459A3 MUST ALSO BE FOLLOWED.

BITTE AUCH DIE INSTALLATIONSANWEISUNGEN BEACHTEN UND ZEICHNUNG L00137A4 + K02459A3

NOTER AUSSI DES INSTRUCTIONS D'INSTALLATION ET DESSIN L00137A4 + K02459A3.

B

LIITÄNNÄT ALHAALTA.
ANSLUTNING NEDIFRÅN.
CONNECTIONS FROM BELOW.
ANSCHLUSS VON NEBEN.
CONNECTION SUR LE SOL.

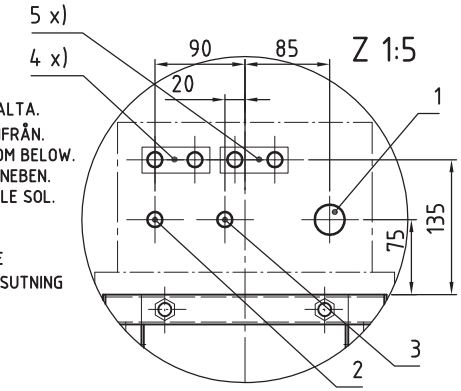

x) LISÄVARUSTE
TILLÄGGSUTRSUTNING
ACCESSORY
ZUBEHÖR
ACCESSOIRE

	CULINO VIKING	L1	L2	M	L	LM	H	T	D	N	V	KG
1	40E	1047	897	900	630	730	1710	400	730	455	613	190
	60E	1047	897	1040	630	820	1710	400	730	455	613	200
	80E	1154	1004	1080	710	850	1800	500	785	405	720	215
	100E	1154	1004	1080	710	850	1800	500	785	405	720	255

xx)

2 PERUSPATA 40-100E: AINOASTAAN PATAKOOT 40-100E LIITETTÄVISSÄ RYHMÄKSI PERUSPADAN OIKEALLE PUOLELLE.
MAIN KETTLE 40-100E: ONLY KETTLE SIZES 40-100E POSSIBLE TO COMBINE INTO A GROUP ON THE MAIN KETTLE'S RIGHT SIDE.

Asennus pintakehykselle.
Installation på ytram.
Installation on surface installation frames.
Die Installation auf einem Flächeninstallationsrahmen.
Installation directe sur socle en surface du sol.

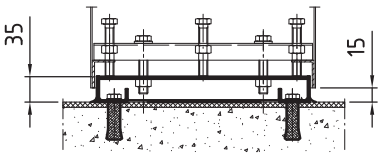

Asennus valuun upotettavalle asennuskehykselle.
Installation på ingjutningsram.
Installation on subsurface frames casted into the floor.
Die Installation auf Installationsrahmen der im Beton eingegossen ist.
Installation sur socles coulés dans le béton.

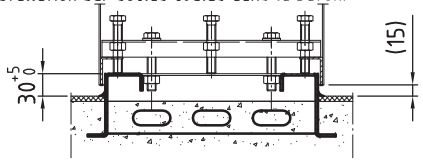

Rev.	Muutos	Pvm.	Suunn.
B	Lisätty vaihtoehtoidet liitännät takaa/alhaalta sekä Viking padat	28.11.2007	maso

	Tuote / Produkt / Product: CULINO/VIKING 4-10 E VCP MOD	Suhde / Skala / Scale: 1:20
		Suunn. 25.09.2006 maso
ASENNUSPIIRUSTUS / SÄHKÖ INSTALLATIONSRITNING / EL INSTALLATION DRAWING / ELECTRIC	INSTALLATIONSZEICHNUNG / ELECRISH DESSIN D'INSTALLATION / ELECTIQUE	L00130 B 3
		Tulostettu 29.11.2007

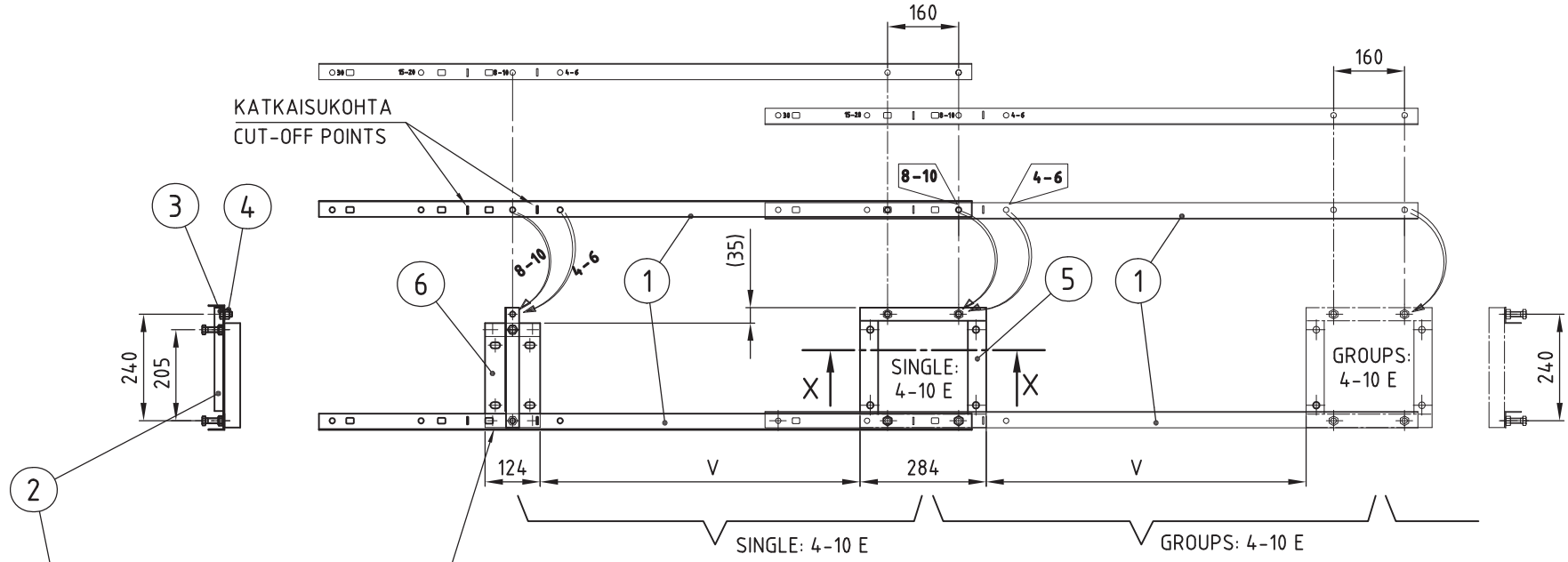

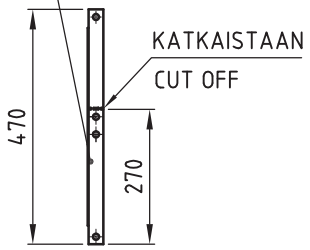

HUOMIOI MYÖS ASENNUSOHJEEN VAATIMUKSET.
IAKTTAG ÄVEN KRAVEN I INSTALLATIONSANVISNINGEN.
THE REQUIREMENTS IN THE INSTALLATION INSTRUCTIONS MUST ALSO BE FOLLOWED.

		AS.KEHYS/TOIMIJ.		AS.KEHYS/TUKIJ.	
PATAKOKO	V	PINTA	VALU	PINTA	VALU
CULINO / VIKING 4-6 E	613	4215230	4215232	4215231	4215233
CULINO / VIKING 8-10 E	720	4215230	4215232	4215231	4215233

X - X

VALU-ASENNUSKEHYS
SUBSURFACE INSTALLATION FRAME

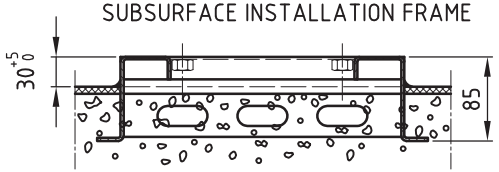

PINTA-ASENNUSKEHYS
SURFACE INSTALLATION FRAME

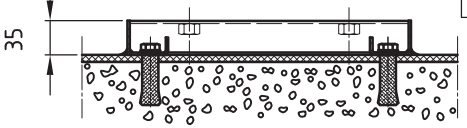

SISÄLTYY JOKAISEEN PATATOIMITUKSEEN

Osa	Nimitys 1	Nimitys 2	Koodi	Kpl	Määrä	Aine	Piir. / Mitat / Huom.
6	AS.KEHYS/TUKIJ.	KTS. TAUL.		1			
5	AS.KEHYS/TOIMIJ.	KTS. TAUL.		1			
4	KUUSIOMUTTERI	M12 DIN934 A2	3025998	1			
3	KUUSIORUUVI	M12X20 DIN933 A2	3029199	1			
2	VÄLIPIENA	VI/CU 4-30	3603232	1			K02231B4
1	ASENNUSKISKO		3601113	4			K00553B3

Tuote | Multi -
Malli
Suhde 1:10
Suunn. 29.03.2007 maso

ASENNUSMITOITUS, SÄHKÖ
VI/CU 40 - 100 E (ELECTRIC KETTLES)
VCP MOD
Koodi

K02459A 3
Tulostettu 09.01.2008
Toleroimattomat mitat LT06031

Installation dimensions K02459 A3

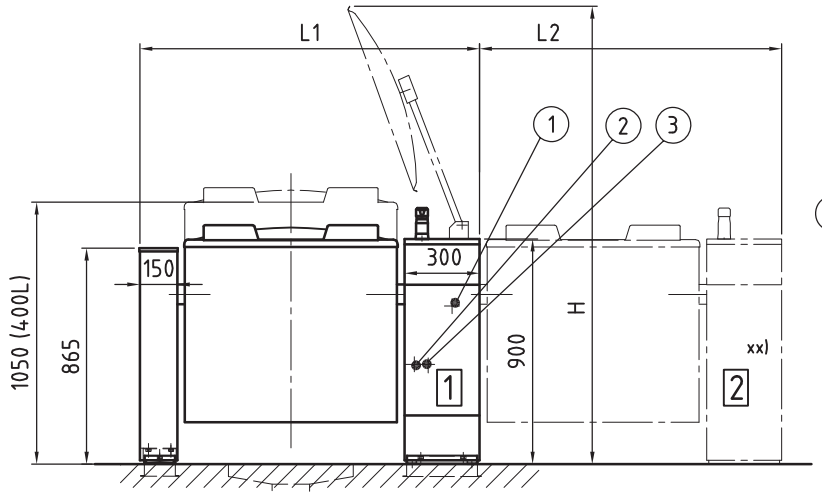

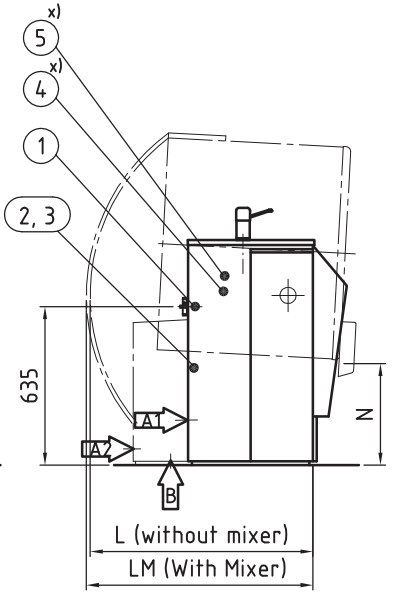

A -LIITÄNNÄT TAKAAPÄIN. -ANSLUTNING BAKIFRÅN. -CONNECTIONS FROM REAR. -ANSCHLUSS VON HINTEN. -CONNEXIONS DERRIÈRE.

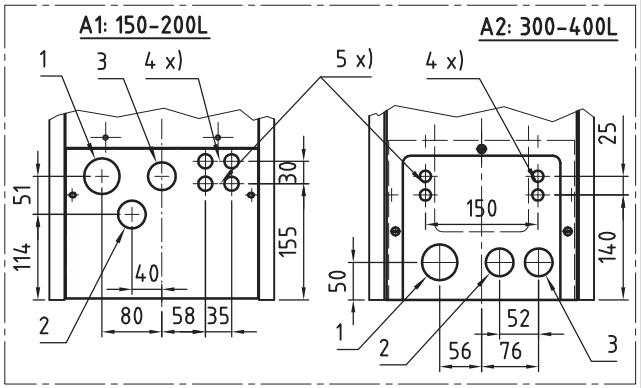

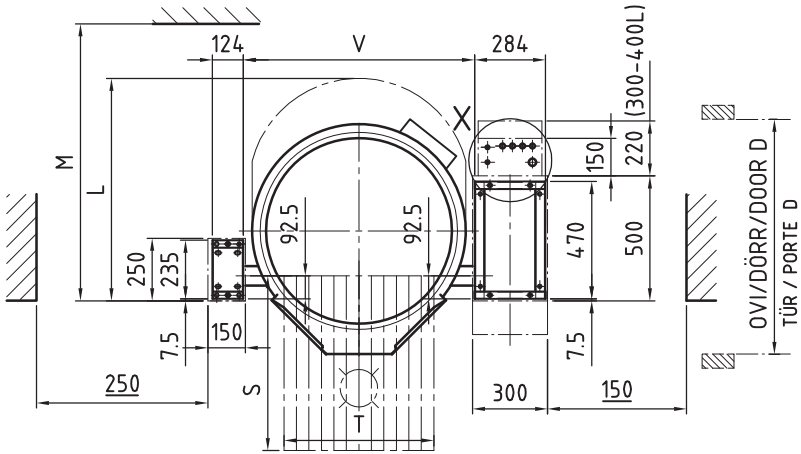

B 150-400L

LIITÄNNÄT ALHAALTA.
ANSLUTNING NEDIFRÅN.
CONNECTIONS FROM BELOW.
ANSCHLUSS VON NEBEN.
CONNECTION SUR LE SOL.

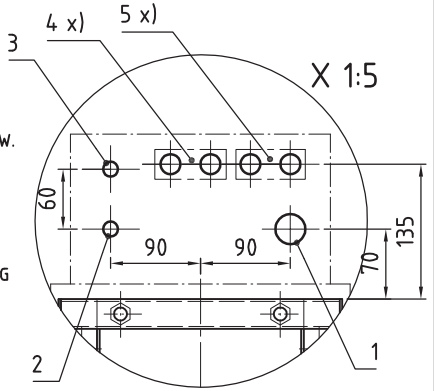

-HUOMIOI MYÖS ASENNUSOHJE JA PIIRUSTUKSET L00137A4 + K02226C3.
-IAKTTAG ÄVEN INSTALLATIONS- ANVISNINGEN OCH RITNINGAR L00137A4 + K02226C3.
-THE INSTALLATION INSTRUCTIONS AND DRAWINGS L00103C3 + K02226C3 MUST ALSO BE FOLLOWED.
-BITTE AUCH DIE INSTALLATIONSANWEISUNGEN BEACHTEN UND ZEICHNUNG L00137A4 + K02226C3.
-NOTER AUSSI DES INSTRUCTIONS D'INSTALLATION ET DESSIN L00137A4 + K02226C3.

x) LISÄVARUSTE
TILLÄGGSUTRSUTNING
ACCESSORY
ZUBEHÖR
ACCESSOIRE

	L1	L2	M	L	LM	H	S	T	D	N	V	KG
CULINO/VIKING -150E	1360	1210	1010	895	910	1980	800	600	945	420	926	250
CULINO/VIKING -200E	1360	1210	1130	895	980	1980	800	600	945	420	926	270
CULINO -300E	1560	1410	1190	1135	1135	2100	800	600	1165	450	1126	420
VIKING COMBI -300E	1560	1410	1190	-	1135	2100	800	600	1165	450	1126	420
CULINO COMBI -400E	1560	1410	1190	-	1135	2235	1200	600	1165	440	1126	480

1

xx)
2

PERUSPATA 150-200E: PATAKOOT 40-200E LIITETTÄVISSÄ RYHMÄKSI PERUSPADAN OIEALLE PUOLELLE.
PERUSPATA 300-400E: PATAKOOT 40-400E LIITETTÄVISSÄ RYHMÄKSI PERUSPADAN OIKEALLE PUOLELLE.

MAIN KETTLE 150-200E: KETTLE SIZES 40-200E POSSIBLE TO COMBINE INTO A GROUP ON THE MAIN KETTLE'S RIGHT SIDE.
MAIN KETTLE 300-400E: KETTLE SIZES 40-400E POSSIBLE TO COMBINE INTO A GROUP ON THE MAIN KETTLE'S RIGHT SIDE.

Asennus pintakehykselle.
Installation på ytram.
Installation on surface installation frames.
Die Installation auf einem Flächeninstallationsrahmen.
Installation directe sur socle en surface du sol.

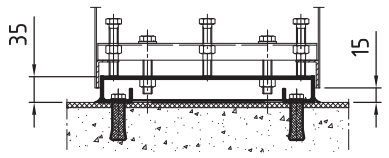

Asennus valuun upotettavalle asennuskehykselle.
Installation på ingjutningsram.
Installation on subsurface frames casted into the floor.
Die Installation auf Installationsrahmen der im Beton eingegossen ist.
Installation sur socles coulés dans le béton.

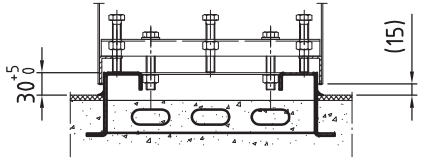

Rev.	Muutos	Pvm.	Suunn.
C	Lisätty 400L:n pata ja tark. painoja	22.05.2008	maso
B	Lisätty vaihtoehtoiset liitännät takaa/alhaalta sekä Viking padat	28.11.2007	maso

Tuote / Produkt / Product: CULINO/VIKING 15-40 E VCP MOD

Suhde / Skala / Scale: 1:20

Suunn. 25.09.2006 maso

ASENNUSPIIRUSTUS / SÄHKÖ
INSTALLATIONSRITNING / EL
INSTALLATION DRAWING / ELECTRIC

INSTALLATIONSZEICHNUNG / ELECRISH
DESSIN D'INSTALLATION / ELECTIQUE

L00131 C 3

Tulostettu 30.05.2008

Installation drawing L00131 C3

Installation dimensions K02226 C3

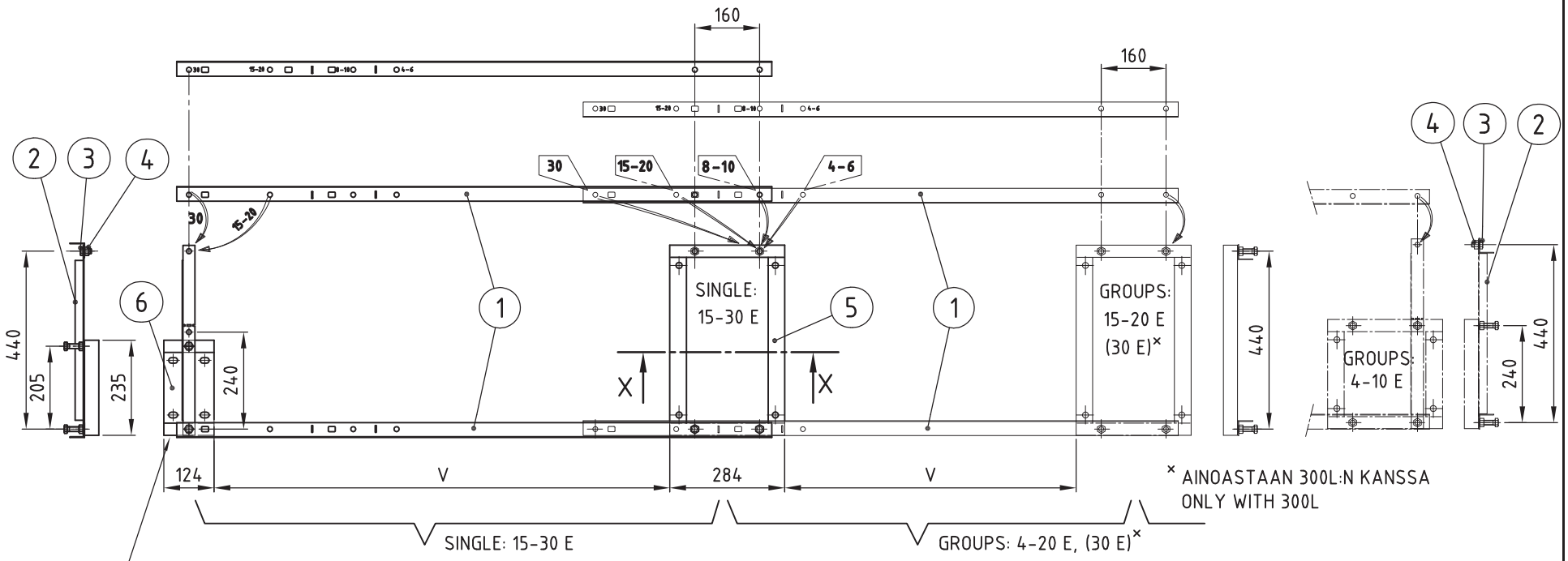

ASENNUSKEHYKSIEN ETUOSAT SAMAAN LINJAAN

INSTALLATION FRAME'S FRONT SIDES ON THE SAME LINE

HUOMIOI MYÖS ASENNUSOHJEEN VAATIMUKSET.
IAKTTAG ÄVEN KRAVEN I INSTALLATIONSANVISNINGEN.
THE REQUIREMENTS IN THE INSTALLATION INSTRUCTIONS MUST ALSO BE FOLLOWED.

		AS.KEHYS/TOIMIJ.		AS.KEHYS/TUKIJ.	
PATAKOKO	V	PINTA	VALU	PINTA	VALU
CULINO / VIKING 4-6	613	4215230	4215232	4215231	4215233
CULINO / VIKING 8-10	720	4215230	4215232	4215231	4215233
CULINO / VIKING 15-20	926	4211443	4211901	4215231	4215233
CULINO / VIKING 30	1126	4211443	4211901	4215231	4215233

X - X

VALU-ASENNUSKEHYS
SUBSURFACE INSTALLATION FRAME

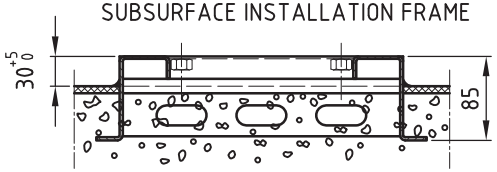

PINTA-ASENNUSKEHYS
SURFACE INSTALLATION FRAME

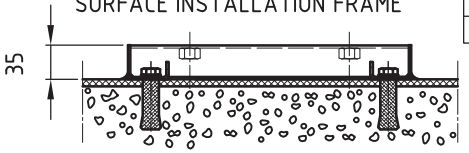

SISÄLTYY JOKAISEEN PATATOIMITUKSEEN

Osa	Nimitys 1	Nimitys 2	Koodi	Kpl	Määrä	Aine	Piir. / Mitat / Huom.
6	AS.KEHYS/TUKIJ.	KTS. TAUL.		1			
5	AS.KEHYS/TOIMIJ.	KTS. TAUL.		1			
4	KUUSIOMUTTERI	M12 DIN934 A2	3025998	1			
3	KUUSIORUUVI	M12X20 DIN933 A2	3029199	1			
2	VÄLIPIENA	VI/CU 4-30	3603232	1			K02231B4
1	ASENNUSKISKO		3601113	2			K00553B3

Tuote | Multi -
Malli
Suhde 1:10
Suunn. 05.09.2006 maso

ASENNUSMITOITUS, SÄHKÖ
VI/CU 150 - 300 E (ELECTRIC KETTLES)
VCP MOD
Koodi

K02226C 3
Tulostettu 09.01.2008
Toleroimattomat mitat LT06031

Rev.	Muutos	Pvm.	Suunn.
C	KOOT 40-100E SIIRRETTY KUVAAN K02459A3	02.04.2007	maso
B	MITOITUSTA KORJATTU, ETUMMAISET REIJÄT SAMASSA LINJASSA	26.09.2006	maso

1. SÄHKÖLIITÄNTÄ, VARATTAVA LATTIASTA 1,5M SÄHKÖKAAPELIA.
2. KYLMÄVESILIITÄNTÄ ø15 (G1/2"), VARUSTETTAVA TAKAISKU- JA SULKUVENTTIILILLÄ.
3. LÄMMINVESILIITÄNTÄ (MAKS. 60°C) ø10 (G3/8"), VARUSTETTAVA TAKAISKU- JA SULKUVENTTIILILLÄ.

x) 4. TIETOLIIKENNEKAAPELOINTI (HACCP), VARATTAVA 2 KPL MIN. 20 MM PUTKITUSTA.

x) 5. OHJAUSKAAPELIT KIINTEISTÖÖN PADAN LÄMMITYSOHJAUKSELLE. VARATTAVA 2 KPL MIN 20 MM PUTKITUSTA.

1. ELANSLUTNING, RESERVERA EL.KABEL 1,5M FRÅN GOLV
2. KALLVATTENANSLUTNING ø15 (G1/2"), BÖR FÖRSES MED ENVÄGS- OCH AVSTÄNGNINGSVENTIL.
3. VARMVATTEN (HÖGST 60°C) ø10 (G3/8"), BÖR FÖRSES MED ENVÄGS- OCH AVSTÄNGNINGSVENTIL.

x) 4. DATA KABEL (HACCP), 2 ST MIN 20 MM SKYDDSRÖR BÖR RESERVERAS.

x) 5. STYRKABLAR TILL FASTIGHET FÖR GRYTANS VÄRME-EFFEKTKONTROLL. 2 ST MIN. 20 MM SKYDDTUB BÖR RESERVERAS.

1. RESERVE 1,5M OF POWER CABLE ABOVE THE FLOOR LEVEL.
2. COLD WATER CONNECTION ø15 (G1/2 "), ONE-WAY AND SHUT-OFF VALVES MUST BE FITTED.
3. WARM WATER CONNECTION (MAX 60°C) ø10 (G3/8"), ONE-WAY AND SHUT-OFF VALVES MUST BE FITTED.

x) 4. DATA CABLE (HACCP), 2 PCS OF MIN. 20 MM COVER TUBES MUST BE RESERVED.

x) 5. CONTROL CABLES TO BUILDING FOR HEATING CONTROL OF THE KETTLE. 2 PCS OF MIN. 20 MM COVER TUBES MUST BE RESERVED.

1. ELEKTROANSCHLUSS, 1,5M EL.KABEL ÜBER FUSSBODEN FREI LASSEN.
2. KALTWASSERANSCHLUSS ø15 (G1/2"), SOLL MIT EINEM RÜCKSCHLAGVENTIL UND ABSPERRVENTIL VERSEHEN WERDEN.
3. WARMWASSERANSCHLUSS (ALLER HÖCHSTENS 60°C) ø10 (G3/8"), SOLL MIT EINEM RÜCKSCHLAGVENTIL UND ABSPERRVENTIL VERSEHEN WERDEN.

x) 4. DATENÜBERTRAGUNGSKABEL (HACCP), 2 x MIND. 20MM VERROHRUNG ZU RESERVIEREN.

x) 5. STEUERUNGSKABEL ZUM GRUNDSTÜCK FÜR HEIZUNGSKONTROLLE DES KESSELS. 2 x MIND 20 MM VERROHRUNG ZU RESERVIEREN.

1. BRANCHEMENT ÉLECTRIQUE 1,5M DU CÂBLAGE SUR LE SOL À RÉSERVER.
2. CONNECTION D'EAU FROIDE ø15 (G1/2"), DOIVENT ÊTRE MUNIES DE SOUPAPE DE RETENUE ET VANNES D'ARRÊT.
3. CONNECTION D'EAU CHAUDE (AU MAXIMUM 60°C) ø10 (G3/8"), DOIVENT ÊTRE MUNIES DE SOUPAPE DE RETENUE ET VANNES D'ARRÊT.

x) 4. CÂBLAGE INFORMATIQUE (HACCP). A RÉSERVER: TUYAUX 2 x À MIN 20 MM.

x) 5. CÂBLAGE POUR LA TRANSMISSION DE DONNÉES DANS LE BÂTIMENT, CÔNTROLE CHAUFFAGE DE LA MARMITE. A RÉSERVER: TUYAUX 2 x À MIN 20 MM.

x) LISÄVARUSTE
TILLÄGGSUTRSUTNING
ACCESSORY
ZUBEHÖR
ACCESSOIRE

'	Tuote / Produkt / Product: CULINO/VIKING 4-30 E VCP MOD	Suhde / Skala / Scale: 1:50
		Suunn. 28.11.2007 maso
TEKSTIOSA / SÄHKÖ TEXT DEL / EL TEXT PART / ELECTRIC	TEXT / ELECTRISH TEXT / ELECTRIQUE	L00137 A 4
		Tulostettu 16.06.2008

Item	Type	Acces-sory	Specification
Overall dimensions incl. support pillar WxDxH	40,60		1047x730x900/1080 mm
Overall dimensions incl. support pillar WxDxH	80,100		1154x785x900/1080 mm
Overall dimensions incl. support pillar WxDxH	150,200		1360x945x900/1080 mm
Overall dimensions incl. support pillar WxDxH	300		1560x1165x900/1080 mm
Overall dimensions incl. support pillar WxDxH	400		1560x1165x900/1230 mm
Support pillar dimensions LxDxH			150x250x865 mm
Distance needed behind the kettle	40		730 mm
Distance needed behind the kettle	60		820 mm
Distance needed behind the kettle	80,100		850 mm
Distance needed behind the kettle	150		910 mm
Distance needed behind the kettle	200		980 mm
Distance needed behind the kettle	300,400		1135 mm
Tilting height from outer shell to floor	40,60		455 mm
Tilting height from outer shell to floor	80,100		405 mm
Tilting height from outer shell to floor	150,200		420 mm
Tilting height from outer shell to floor	300		450 mm
Tilting height from outer shell to floor	400		440 mm
Maximum height of cover	40,60		1710 mm
Maximum height of cover	80,100		1800 mm
Maximum height of cover	150,200		1980 mm
Maximum height of cover	300		2100 mm
Maximum height of cover	400		2235 mm
Distance needed for service, left side			250 mm
Distance needed for service, right side			150 mm
Inner diameter	40, 60		472 mm
Inner diameter	80,100		545 mm
Inner diameter	150,200		744 mm
Inner diameter	300		944 mm
Material of inner jacket and bottom			Acid proof stainless steel AISI 316
Other parts of the kettle			Stainless steel AISI 304
Weight with package	40		190 kg
Weight with package	60		200 kg
Weight with package	80		215 kg
Weight with package	100		255 kg
Weight with package	150		320 kg
Weight with package	200		340 kg
Weight with package	300		520 kg
Weight with package	400		580 kg
Weight	40		169 kg
Weight	60		179 kg
Weight	80		192 kg
Weight	100		232 kg
Weight	150		250 kg
Weight	200		270 kg

Technical specifications

Item	Type	Acces-sory	Specification
Weight	300		420 kg
Weight	300		480 kg
Transport volume	40,60		1,32
Transport volume	80,100		1,45
Transport volume	150,200		2,01
Transport volume	300		2,73
Transport volume	400		3,2
Mixer power	40,60,80,100	M	0,75 kW
Mixer power	150,200,300	M	1,5 kW
Mixer power	400	M	2,2 kW
Electricity connections			see Wiring diagram
Water connections			see Installation drawing
Sound level of the applianœ measured 1m straight in front of the appliance and at a height of 1,5m			<70 dB(A)
Weight of mixing tool	40	M	2,8 kg
Weight of mixing tool	60	M	4,2 kg
Weight of mixing tool	80	M	4,2 kg
Weight of mixing tool	100	M	4,5 kg
Weight of mixing tool	150	M	4,7 kg
Weight of mixing tool	200	M	5,5 kg
Weight of mixing tool	300	M	6,5 kg
Weight of mixing tool	400	M	11,2 kg
Number of scrapers	40	M	1
Number of scrapers	60,80	M	2
Number of scrapers	100,150	M	3
Number of scrapers	200,300	M	4
Number of scrapers	400	M	5
Emptying valve			
Mixer M			
AutoPack A			Timer and automatic water filling
Timer AT			Timer
Automatic water filling AW			Automatic water filling
HACCP option			
Manual cooling C1			
Automatic cooling C2			
Icebank cooling C3			Timer and automatic icebank cooling

E=ELECTRICALLY HEATED

40=40 l, 60=60 l, 80=80 l, 100=100 l, 150=150 l, 200=200 l, 300=300 l, 400=400 l

M=MIXER, C1=MANUAL COOLING, C2=AUTOMATIC COOLING, C3=ICEBAN K COOLING, AT=TIMER, AW=AUTOMATIC WATER FILLING, A=AUTOPACK (AT+AW), HACCP=HACCP

METOS OY AB
LOMAKE LT30024
Rev. PED 5.1 15.12.2009

VAATIMUSTENMUKAISUUSVAKUUTUS
FÖRSÄKRAN OM ÖVERENSSTÄMMELSE
DECLARATION OF CONFORMITY

VCF_VV_2010.doc

Valmistajan nimi / Tillverkarens namn / Manufacturer's name
METOS OY AB

Osoite / Adress / Adress
04220 KERAVA
FINLAND

Vakuuttaa, että seuraava tuote / Försäkrar att följande produkt / Declare that the following product

Nimi, tyyppi tai malli / Namn, typ eller model / Name, type or model
Kombipetasarjat / Kombigrytaserierna / Combikettle series **METOS / HACKMAN PROVENO, CULINO COMBI ja / och / and VIKING COMBI** sähkö- tai höyrylämmitteinen / el- eller ånguppvärmd / electrically or steam heated.
Mallit / Modeller / Models : 40, 60, 80, 100, 150, 200, 300, 400
Varustepaketit / Optionspaket / Option sets: Basic, Combi, Combi Pro, Cool, Cool Pro, Grill Pro

on seuraavien direktiivien asiaankuuluvien säännösten mukainen / överensstämmer med tillämpliga bestämmelser i följande direktiv / is in conformity with the relevant provisions of the following directives

MD 2006/42/EC LVD 2006/95/EC, EMC 2004/108/EC, RoHS 2002/95/EC, WEEE 2002/96/EC
PED 97/23/EC, moduulit / modulerna / modules B1 + D
- SEP: 10 – 60 höyry/ånga/steam
- Cat I: 40 – 60 sähkövel/electric, 80 – 400 höyry/ånga/steam
- Cat II: 80 – 400 sähkövel/electric

HUOM: PED 97/23/EY artiklan 3 kohdan 3 mukaisesti vaatimustenmukaisuusvakuutus ja CE merkintä ei koske SEP luokiteltuja laitteita.
OBS: Enligt PED 97/23/EG artikel 3 paragraf 3 gäller försäkran om överensstämmelse och CE –märkningen ej produkter i SEP kategorin.
ATT: According to PED 97/23/EC article 3 paragraph 3 the declaration of conformity and the CE marking does not apply to SEP category products.

ja lisäksi vakuuttaa, että seuraavia yhdenmukaistettuja standardeja (tai niiden osia/kohtia) on sovellettu / och försäkrar dessutom att följande harmoniserade standarder (eller delar/paragrafer) har använts / and furthermore declares that the following harmonised standards (or parts/clauses) have been used

EN ISO 12100-1, EN ISO 12100-2 EN ISO 13857
EN 61000-6-1, EN 61000-6-3

ja lisäksi vakuuttaa, että seuraavia muita standardeja (tai niiden osia/kohtia) on sovellettu / och försäkrar dessutom att följande andra standarder (eller delar/paragrafer) har använts / and furthermore we declare that the following other standards (or parts/clauses) have been used

EN 60204-1, EN 60335-1, EN 60335-2-47
EN 13886

Tuotteen suunnitelmatarkastustodistus ja laatujärjestelmää valvova ilmoitettu laitos (vain painolaitteet)
Produktens konstruktionskontrollcertifikat och anmält organ, som övervakar kvalitetssystemet (endast tryckkärl)
Product design examination certificate and the notified body supervising the quality system (only pressure vessels)

RS 469 02 + Quality system Inspecta Tarkastus Oy, Helsinki, Finland 0424	DA 30269 2008 (400E), 30317-2009 (400S) Polarfast Oy, Vantaa, Finland 0875

Alla mainittu henkilö on valtuutettu kokoamaan teknisen tiedoston / Nedan närmda person är bemyndigad att sammanställa den tekniska dokumentfilen / The person mentioned below is authorized to compile the technical file

Rainer Kato Metos Oy Ab, Ahjonkaarre, 04220 Kerava, Finland

Antopaikka ja aika / Utfärdad på ort och datum / Place and date of issue
KERAVA 20.1.2010

Valtuutetun henkilön nimi ja asema / Bemyndigad persons namn och befattning / Name and title of authorized person

Pekka Mönkkönen – Director of Business Unit

Pasi Karhunen - Manager