Blast Chillers/Freezers
BLC3, BLC5, BLC10, BLC14



CONTENT

ENGLISH

1.REGULATIONS AND GENERAL INSTRUCTIONS....1
1.1 General information....1
1.2 Replacement of Parts....1
1.3 Description of the Appliance....1
1.4 Features Plate....2
2. SAFETY....3
3.RECOMMENDATIONS FOR USE....4
Prolonged Inactivity....4
Blast chilling Cycle....5
Shock freezing Cycle....5
4.CLEANING AND MAINTENANCE....6
4.1 Recommendations for Cleaning and Maintenance....6
4.2 Routine Maintenance....6
4.3 Extraordinary maintenance....6
5.TROUBLE SHOOTING....8
6. INSTALLATION....9
6.1 Packing And Unpacking....9
6.2 Installation....9
6.3 Electric Power Supply Connection....10
6.4 Inspection....10
7.DISPOAL OF THE APPLIANCE....11
8.REFRIGERANT RECHNICAL CARD....11
XB570L BLAST CHILL&FREEEZER CONTROLLER....12
9. General Features....12
10. Mounting & Installation....12
11. Electrical Connections....12
11.1 PROBES CONNECTION....13
12. Connections....13
13. Frontal panel....13
14. QUICK START....13
14.1 DISPLAY....13
14.2 KEYBOARD IN STAND-BY....14
14.3 KEYBOARD WHEN A CYCLE 1,2,3,4 IS RUNNING....15
14.4 KEYBOARD WHEN THE HOLDING CYCLE IS RUNNING (H)....16
14.5 OTHER KEYS....16
14.6 HOW TO START A MANUAL DEFROST....17
14.7 OTHER FUNCTIONS OF KEYBOARD....17
14.8 MEANING OF THE LEDS'....17
15. How To Select A Cycle....18
15.1 HOW TO MODIFY A CYCLE....18
16. Parameters....18
PROBES....19

DISPLAY AND MEASUREMENT UNIT 19
DIGITAL INPUTS 19
AUXILIARY RELAY CONFIGURATION 20
SECOND RELAY MANAGEMENT 20
AUXILIARY RELAY MANAGEMENT 21
DEFROST 21
FANS 21
TEMPERATURE ALARMS 22
CYCLE LOG 22
OTHER 22
17. How A Cycle Is Done 22
17.1 CONFIGURABLE CYCLE PARAMETERS 23
17.2 HOW TO USE THE INSERT PROBES 23
17.3 EXAMPLE OF A BLAST CHILLER CYCLE. 23
18. Installation and mounting 25
18.1 CUT OUT 25
18.2 MOUNTING 25
19. XB07PR - Printer (optional) 26
19.1 PRINTER DIMENSIONS 26
19.2 PRINTER MOUNTING 26
19.3 CONNECTION TO THE XB570L – XB07PR 27
20. Electrical connections 27
20.1 PROBE CONNECTIONS 27
21. TTL Serial line 27
22. Use of the programming “HOT KEY” 27
22.1 DOWNLOAD (FROM THE “HOT KEY” TO THE INSTRUMENT) 27
22.2 UPLOAD (FROM THE INSTRUMENT TO THE “HOT KEY”) 28
23. ALARM SIGNALS 28
24. Technical data 29
25. Standard Value of the cycles 29
26. Standard Values of the parameters 30

1.REGULATIONS AND GENERAL INSTRUCTIONS

1.1 General information

This manual has been designed by the manufacturer to provide the necessary information to those who are authorized to interact with the appliance.

The persons receiving the information must read it carefully and apply it strictly.

Reading the information contained in this document will allow the user to prevent risks to personal health and safety.

Keep this manual for the entire operating life of the equipment in a place which is well-known and easily accessible, so that it is always available when its consultation becomes necessary.

Particular symbols have been used to highlight some parts of the text that are very important or to indicate some important specifications. Their meanings are given below:

⚠ Indicates important information regarding safety. Behave appropriately so as not to risk the health and safety of persons or cause damage.

ⓘ Indicates particularly important technical information that must not be ignored

1.2 Replacement of Parts

⚠ Activate all envisioned safety devices before carrying out any replacement intervention.

ⓘIn particular, deactivate the electrical power supply using the differential isolating switch.

ⓘ All responsibility is declined for injury to persons or damage to components deriving from the use of non-original spare parts and interventions which could modify the safety requisites,without authorization of the manufacturer.

1.3 Description of the Appliance

The Blast chiller & freezer, from now on defined as appliance, has been designed and built to cool and/or freeze foodstuffs in the professional catering ambit.

1) **Condensation area**: it is positioned in the lower part and is characterized by the presence of the condensing unit.
2) **Electric area**: it is positioned in the lower part of the appliance and contains the control and power supply components as well as electric wiring.
3) **Evaporation area**: it is situated inside the refrigerated compartment in the rear and is characterized by the evaporating unit.
4) **Storage area**: it is situated inside the refrigerated compartment and is destined for the cooling and/or freezing of foodstuffs.



The lower part is also distinguished by a control panel (**A**) that allows access to the electric parts; there is a vertically-opening door in the front, which closes the refrigerated compartment hermetically.

Depending on requirements, the appliance is produced in several versions.

BLC3 BLAST CHILLER/FREEZER
Model suitable to contain 3 trays with blast chilling capacity of 12kg and 8 kg in shock freezing.
BLC5 BLAST CHILLER/FREEZER
Model suitable to contain 5 trays with blast chilling capacity of 18kg and 14kg in shock freezing.
BLC10 BLAST CHILLER/FREEZER
Model suitable to contain 10 trays with blast chilling capacity of 40kg and 28 kg in shock freezing.
BLC14 BLAST CHILLER/FREEZER
Model suitable to contain 14 trays with blast chilling capacity of 55kg and 38kg in shock freezing.

1.4 Features Plate

The identification plate shown is applied directly onto the appliance. It states the reference and all indications indispensable for working in safety.

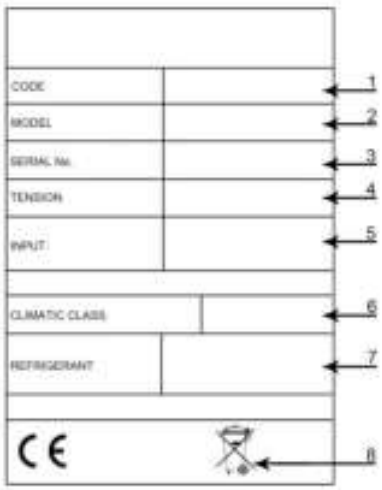

(1) Appliance code
(2) Description of the Appliance
(3) Serial number
(4) Power supply voltage and frequency
(5) Electrical absorption
(6) Climatic class
(7) Type and Amount of refrigerant gas
(8) WEEE symbol

2. SAFETY

ⓘ It is recommended to carefully read the instructions and warnings contained in this manual before using the appliance. The information contained in the manual is fundamental for the safety of use and for machine maintenance.

⚠ Keep this manual carefully so that it can be Consulted when necessary.

ⓘ The electric plant has been designed in compliance with the IEC EN 60335-2-89 and EN 60335-1 standard.

⚡ Specific adhesives highlight the presence of mains voltage in the proximity of areas(however protected)with risks of an electrical nature.

⚠ Before the connection, ensure the presence of an omni polar switch with minimum contacts opening equal to 3 mm in the mains power supply upstream from the appliance (requested for appliances supplied without plug to connect to the fixed plant).

In the design and construction phase, the manufacturer has paid particular attention to the aspects that can cause risks to safety and health of persons that interact with the appliance.

Carefully read the instructions stated in the manual supplied and those applied directly to the machine, and particularly respect those regarding Safety.

Don't tamper or eliminate the installed safety devices. Failure to comply with this requisite can Lead to serious risks for personal health and safety.

It is recommended to simulate some test manoeuvers in order to identify the controls, in particular those relative to switch-on and switch-off and their main functions.

The appliance is only destined for the use for which it has been designed; any other use must be considered improper.

ⓘ The manufacturer declines all liability for any damage to objects or injury to persons owing to improper or incorrect use.

ⓘ All maintenance interventions that require precise technical skill or particular ability must be performed exclusively by qualified staff.

⚠ When using the appliance, never obstruct the air inlet when the appliance is on,so as not to compromise its performance and safety.

⚠ Never stretch the power cable.

In order to guarantee hygiene and protect the food stuffs from contamination, the elements that come into direct or indirect contact with the foodstuffs must be cleaned very well along with the surrounding areas .These operations must only be performed using detergents that can be used with foodstuffs,

avoiding inflammable products or those that contain substances that are harmful to personal health.

In the case of prolonged inactivity, as well as disconnecting all the supply lines, it is necessary to accurately clean all internal and external parts of the appliance.

3.RECOMMENDATIONS FOR USE

Prolonged Inactivity

If the appliance remains inactive for a long period, proceed as follows

1. Use the automatic isolating switch to deactivate connection to the main electrical line.
2. Clean the appliance and surrounding areas thoroughly.
3. Spread a thin layer of cooking oil onto the stainless steel surfaces
4. Carry out all maintenance operations
5. Leave the doors ajar to prevent the formation of mould and /or unpleasant odour.

Recommendations for normal use

In order to ensure correct use of the appliance, it is good practice to apply the following recommendations:

 Do not obstruct the zone in front of the condensing unit in order to favour heat disposal from the condenser to a maximum.
Always keep the front of the condenser clean.

 Do not insert foodstuffs that are well above the temperature of 65°CAs well as initially overloading the machine it can make protections intervene that prolong temperature descent times. If possible , a brief external period is useful to lower the temperature to acceptable values.
Check the planarity of the appliance rest surface.

 Do not stack the materials to be preserved in contact with the internal walls .so blocking the circulation of air, which guarantees uniformity of the internal temperature of the refrigerated compartment.

There must be a sufficient space between the basins and trays used in order to guarantee a sufficient flow of cold air on the entire product. Therefore avoid the following positions of trays and/or basins stated below.

Never obstruct the inlet of the evaporator fans.

Products that are more difficult to chill because of their composition and size should be placed in the centre.
Limit the number of times and the duration of time the doors are opened.

Blast chilling data refer to standard products (low fat content)with a thickness below 50 mm: therefore avoid overlaying products or the insertion of pieces with a much higher thickness, This would ,in fact, lead to an extension of blast chilling times .Always distribute the product well on the trays or basins or in the case of thick pieces decrease the amount to blast chill.

ⓘAfter blast chilling/shock freezing the product, it can be stored in a preservation cabinet after having been duly protected .A tag should be applied describing the contents of the product, blast chilling/shock freezing date and expiry date. When the product has been blast chilled it must be preserved at a constant temperature of ***+2℃***， while if it has been shock frozen it must be preserved at a constant temperature of ***-20℃***。

ⓘThe chiller should be used for storage for short periods only.

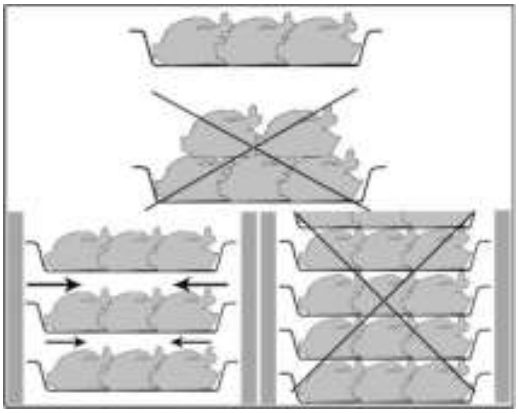

⚠**To prevent bacterial contamination or contamination of any other biological nature, the needle probe must be disinfected after use.**

⚠To extract the product that has undergone blast chilling or shock freezing ,always wear gloves to protect the hands ,as “burns” may occur form the cold.

Blast chilling Cycle

With this operating modality the chiller keeps the temperature of the refrigerating compartment close to zero during the entire chilling process in

order to ensure a gradual drop in the temperature of the product to +3℃。In this way ,ice crystals do not form on the surface of the product .This blast chilling method should be used preferably for products that are not packed and whose physical/organoleptic characteristics could be damaged by the formation of superficial ice (e.g. fish)

Shock freezing Cycle

With this blast chilling modality the blast chiller maintains the temperature at a negative value below -18℃， which is the end temperature of shock freezing .For shock freezing to be successful and fast, food should be in small pieces, especially if it has a high fat content. The largest pieces should be placed in central trays .If it takes longer than standard time to shock freeze and the sizes cannot be reduced, decrease the quantity and precool the chiller compartment by starting an empty shock freezing cycle before shock freezing the product.

4.CLEANING AND MAINTENANCE

4.1 Recommendations for Cleaning and Maintenance

⚠Activate all envisioned safety devices before carrying out any maintenance interventions, In particular, deactivate the electrical power supply using the automatic isolating switch.

4.2 Routine Maintenance

Routine maintenance consists of daily cleaning of all the parts which can into contact with foodstuffs and the periodic maintenance of the burners, nozzles and draining pipes.

Correct maintenance allows the user to maximize performance levels and operating life and constantly maintain safety requirements.

Do not spray the appliance with direct jets of water or using high pressure appliances.

Do not use iron wool. brushes or scrapers to clean the stainless steel as ferrous particles could be deposited which ,on oxidizing, could lead to rust.

To remove hardened residues, use wooden or plastic spatulas or abrasive rubber pads.

During long periods of inactivity , spread a protective layer on all stainless steel surfaces by wiping them with a cloth soaked in Vaseline oil and airing the rooms periodically .

⚠Do not use products which contain substances which are harmful and dangerous for personal health (solvents. petrol etc)

At the end of the day it is advisable to clean:

- the cooling compartment
- the appliance

4.3 Extraordinary maintenance

Have the following operations carried out **periodically** by specialized staff:

- Check the perfect sealing of the door gaskets and replace them if necessary.
- Check that the electric connections have not loosened.
- Check the efficiency of the heating element resistance.
- Check functioning of the board and probes.
- Check the efficiency of the electrical system.
- Clean the evaporator.
- Clean the condenser.

Cleaning the evaporator

Clean the evaporator **periodically.**

⚠ As the fins of the evaporator are very sharp. always wear protective gloves for the next phases .Only a brush must be used for cleaning :do not use jets of liquid or sharp instruments.
To access the evaporator proceed as follows:

1. Open the door(A) of the appliance.
2. Loosen the two screws (B)on the right of the deflector.
3. Remove the runners(C)
4. Turn the deflector(D) to the left.

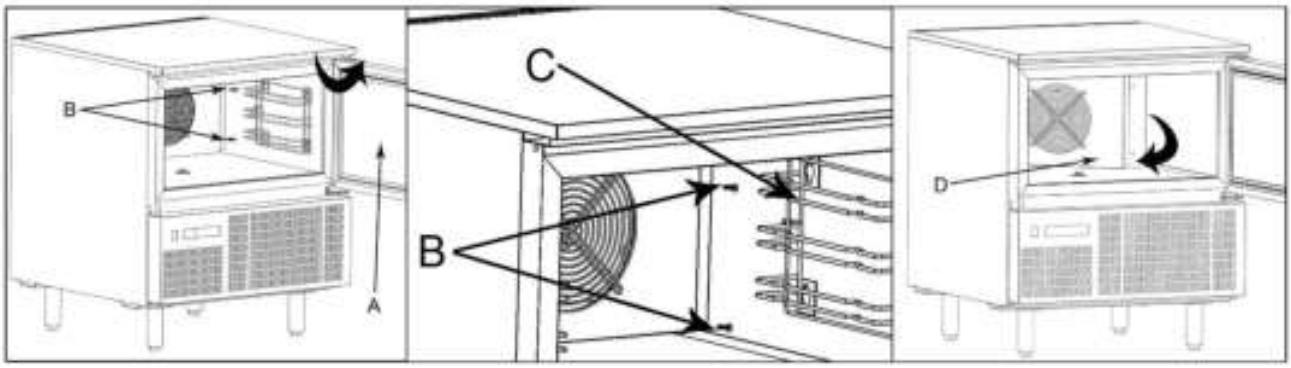

Clean the condenser

Clean the condenser **periodically**

⚠As the fins of the condenser are very sharp, always wear protective gloves for the next phases. Use protective masks and glasses in the presence of dust

ⓘWhenever the condenser has a deposit of dust in correspondence with the fins, this can be removed using a suction device or with a brush applied, using a vertical movement along the direction of the fins.

⚠No other instruments must be used, which may deform the fins and therefore the efficiency of the appliance.

To clean, proceed as follows:

1. Open the door (A) of the appliances.
2. Remove the lower panel(B) from the technical compartment: to do this, remove the screw fasteners(C)
3. It is now possible to clean the finned part of the condenser (D) using suitable tools and protection devices.
4. After cleaning, close the control panel and fix it with the screws removed beforehand.

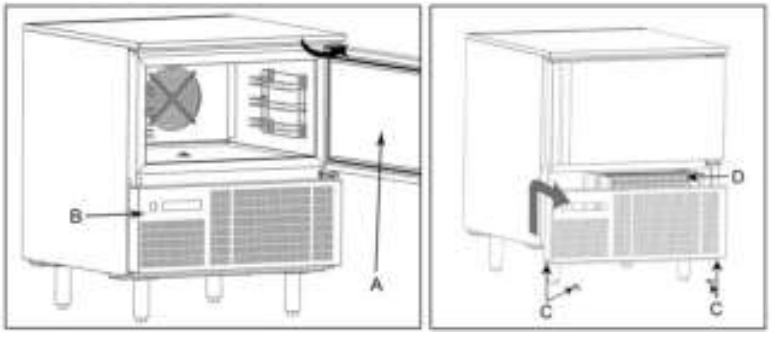

5.TROUBLE SHOOTING

The information shown below aims to help with the identification and correction of any anomalies and malfunctions which could occur during use. Some of these problems can be resolved by the user. For the others, precise skill is required and they must therefore only be carried out by qualified staff.

Problem	Causes	Solutions
The refrigerator unit does not start	No voltage	Check the power supply cable
		Check fuses
		Check the correct connection of the appliance
	Other causes	If the problem persists, contact the after-sales centre
The refrigerator unit functions continuously, cooling insufficiently	Room too hot	Air the environment
	Dirty condenser	Clean the condenser
	Insufficient door sealing	Check the gaskets
	Insufficient quantity of refrigerant gas	Contact the after-sales centre
	Condenser fan at a standstill	Contact the after-sales centre
	Evaporator fan standstill	Contact the after-sales centre
The refrigerator unit does not stop	Probe faulty	Contact the after-sales centre
	Circuit board fault	Contact the after-sales centre
Presence of ice inside the evaporator		Carry out a defrosting cycle possibly with the door open
		If the problem persists, contact the after-sales centre
Appliance noise	Persistent vibrations	Check there is no contact between the appliance and other objects inside or outside

6. INSTALLATION

6.1 Packing And Unpacking

Handle and install the appliance respecting the information provided by the manufacturer, shown directly on the packaging, on the appliance and in this manual.

The lifting and transportation system of the packaged product envisions the use of a fork-lift truck or a pallet stacker. When using these, particular attention must be paid to balancing the weight in order to prevent the risk of overturning(avoid excessive tilting!).

⚠**ATTENTION:** When inserting the lifting device, pay attention to the power supply cable and the position of the feet.

The packaging is made of cardboard and the pallet of plywood. A series of symbols is printed on the cardboard packaging which highlights, in accordance with international standards, the provisions to which the appliances are subjected during loading, unloading, transport and storage.



On delivery, check that the packaging is intact and has not undergone any damage during transportation.

The transportation company must be notified of any damage immediately.

The appliance must be unpacked as soon as possible to check that it is intact and undamaged. Do not cut the cardboard with sharp tools so as not to damage to the steel panels underneath.

Pull the cardboard packaging upwards.

After having unpacked the appliance, check that the features correspond to those requested in the order;

Contact the dealer immediately if there are any anomalies.

⚠Packaging elements (nylon bags, polystyrene foam, staples…) must not be left within reach of children.

Remove the protective PVC film from the internal and external walls, avoiding the use of metal tools.

6.2 Installation

All the installation phases must be considered, from the moment of creation of the general plan.

The installation area must be equipped with all power supply and production residue drainage connections and must be suitably lit and respect current laws regarding hygiene and sanitary requirements.

ⓘThe performance of the appliance is guaranteed with a room temperature of 32℃. A higher

temperature can compromise its performance and, in more serious cases, cause the appliance's protections to start up.

Therefore, consider the most critical room conditions that can be reached in that position before making a choice.

Level the appliance by acting on the individual feet.

⚠ This appliance can only be installed and operate in rooms which are permanently ventilated, in order to guarantee correct operation.

ⓘ Connect and leave for a certain period of time (at least 2 hours) before checking functioning. During transport it is probable that the compressor lubricant oil has entered the refrigerant circuit blocking the capillary: as a consequence the appliance will function for a certain period of time without producing cold until the oil has returned to the compressor.

⚠ **ATTENTION:** the appliance requires the minimum functioning spaces, as shown in the attachments.

The defrosting water and the water that forms at the bottom of the refrigerating compartment during operation or during periodical internal cleaning must be drained through a prearranged hose with a minimum diameter 3/4 connected to the hose at the bottom of the chiller.

A drain trap should also be guaranteed. The drain must be in compliance with Standards in force.

6.3 Electric Power Supply Connection

Connection must be carried out by authorized and qualified staff, respecting the current laws regarding the subject and using appropriate prescribed material.

ⓘ Before connecting the appliance to the electric mains, check that the voltage and the frequency correspond to the data stated on the registration plate applied in the rear of the appliance.

⚠ Before connection, ensure the presence of a relevant differential switch with adequate power in the mains power supply, upstream from the appliance, in order to protect the appliance from overloads or short circuits

6.4 Inspection

The appliance is delivered in conditions such that it can be started-up by the user.

This functionality is guaranteed by passing the tests (electric inspection-functional inspection, appearance inspection) and relative certification through the specific attachments.

At least the following should be checked after installation:

- Check the electric connections.
- Check the functionality and efficiency of drains.
- Check that there are no tools or materials left in the appliance that could jeopardize its functionality or even damage the machine.
- Have the appliance perform at least one complete chill blasting/shock freezing cycle.

7.DISPOAL OF THE APPLIANCE

ⓘ This appliance is marked in compliance with the 2002/96/EC European Directive. WASTE ELECTRICAL AND ELECTRIC EQUIPMENT (WEEE).

⚠ By assuring that this product is disposed of correctly, the user contributes to preventing the potential negative consequences on the environment and health.

The  symbol found on the product or on the accompanying documentation indicates that this product must not be treated as domestic waste but must be taken to suitable collection points for the recycling of electric and electronic appliances.

Dispose of it following local regulations regarding waste disposal.

For further information regarding the treatment, recovery and recycling of this product, contact the relevant local office, the domestic waste collection service or the shop where the product was purchased.

8.REFRIGERANT RECHNICAL CARD

The refrigerant used in the machine is R404a fluid. Below find the components of the fluid:

PENTAFLUOROETANE (HFC R125)44%

ETHANE 1, 1, 1-TRIFLUORO (HFC R143A)52%

ETHANE 1, 1, 1, 2 TERAFLUORO (HFC R134A)4%

IDENTIFICATION OF DANGERS

The rapid evaporation of the liquid can cause freezing. The inhalation of high concentrations of vapour can cause irregular heartbeat, short term narcotic effects (including vertigo , headache and mental confusion), fainting and death.

- Effects to the eyes: Freezing or cold burns caused by contact with the liquid.
- Effects on the skin: Freezing or cold burns caused by contact with the liquid.
- Effects of ingestion. Ingestion is not considered a means of exposure.

FIRST AID

Eyes: In the case of contact, wash the eye well using a large amount of water for at least 15 minutes. Consult a doctor.

Effects on the skin: Wash with water for at least 15 minutes after excessive contact. If necessary, cure freezing by gently warming the area in question. Consult a doctor in the case of irritation.

Ingestion: Ingestion is not considered a means if exposure.

Inhalation: If large concentrations are inhaled, go into the open air, Keep the person calm. If the person cannot breath, perform artificial respiration. If respiration is difficult, apply oxygen. Consult a doctor.

9. General Features

The series XB has been created for fast chilling or freezing goods according to international food safety standards.

There are FOUR types of cycles:

- The CYCLES: Cy1, Cy2, Cy3, Cy4 are pre-set according to the most common cycles used in food - safety applications; the user can select one of them according to his own requirements and modify it as he wants.
- Any cycle can be manually terminated before the normal.
- Any cycle can use the insert probe, it measures the internal temperature of the product.
- During the Cycle there are no defrosts and the fans are always on, a defrost cycle can be done before any freezing cycle.
- The cycle is divided up to 3 phases completely configurable by the user.
- Each instrument is provided with an output for remote display XR REP, which shows the temperature of cabinets or goods.
- The XB570L controller is provided with internal real time clock and can be connected to the XB07PR printer. This means that a report, which includes all the main features of cycle, can be printed: start and end of the cycle, length of the cycle, logging of the temperature of the cabinet and goods.

10. Mounting & Installation

Model XB570L is a controller panel mounted, hole dims 150x31 mm, and fixed with the screws. The ambient operating temperature range is 0÷60°C. Avoid locations subject to heavy vibration, corrosive gases or excessive dirt. The same applies to the probes. Ensure ventilation around the instrument.

11. Electrical Connections

The instruments are provided with a screw terminal block to connect cables with a cross section up to 2,5mm² for probes and digital input.

Spade on 6,3mm heat-resistant wiring for supply and loads. Before connecting cables make sure the power supply complies with the instrument's requirements. Separate the input connection cables from the power.

supply cables, from the outputs and the power connections. **Do not exceed the maximum current allowed on each relay**, in case of heavier loads use a suitable external relay.

11.1 PROBES CONNECTION

The probes shall be mounted with the bulb upwards to prevent damages due to casual liquid infiltration. It is recommended to place the thermostat probe away from air streams to correctly measure the average room temperature. Place the defrost termination probe among the evaporator fins in the coldest place, where most ice is formed, far from heaters and from the warmest place during defrost, to prevent premature defrost termination.

12. Connections

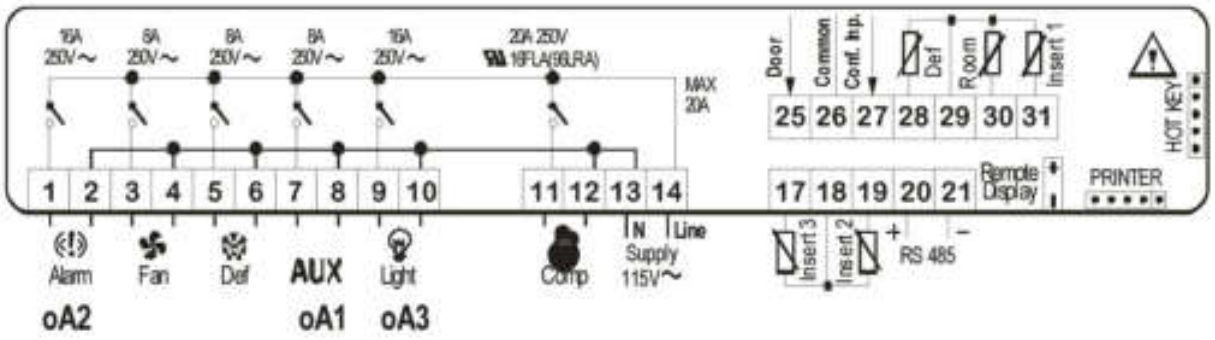

13. Frontal panel



14. QUICK START

14.1 DISPLAY

The upper display shows the temperature of the room probe.

The lower display shows the temperature of the inserts probe or the count down timer. To pass to the one insert probe to the another one use the DOWN key.

DISPLAY

- Temperature.
- Timer or insert probe
- Alarm and status icons.

If an icon or LED is on, the correspondent Function is enabled.

If an icon or LED is flashing, the correspondent function is delayed.

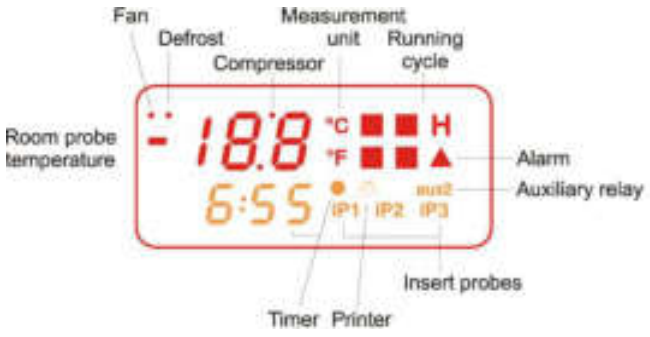

14.2 KEYBOARD IN STAND-BY

HOW TO SELECT A CYCLE:

Push and release the (3) key till the desired cycle is selected.

HOW TO START A CYCLE: Push and release the START/STOP button (2). Il The correspondent yellow LED is switched on..

HOW TO TEMPORARILY STOP THE RUNNING CYCLE.

1. Press and release the key.
2. The compressor and the fan will be stopped for the PAU time (see parameters list) and the flashing message “Stb” will be displayed.
3. To restart the cycle press and release the key, the cycle will restart from the some point at which it was interrupted.
4. In any case the cycle automatically restarts after the PAU time.

HOW TO STOP A CYCLE: hold pushed the START/STOP button (2) till the yellow LED will be switched off.

HOW TO SET THE TIME (RTC)

Hold pushed the **DOWN** key (5) till the Min label is displayed.

Use the **UP** and **DOWN** KEY to browse the parameters.

TO MODIFY: push the **SET** button and then the UP and DOWN keys.

TO CONFIRM: push the **SET** button.

TO EXIT THE RTC MENU: Push together SET + UP keys or wait 5 sec.

1. **HOW DISPLAY / MODIFY THE SET POINT OF THE HOLDING PHASE**

TO DISPLAY: Push and release the **SET** key (6), the holding set point of the selected cycle is displayed for 5 sed..

TO MODIFY: while the set point is displayed hold pushed the SET key till the HdS label start flashing. Use the UP and DOWN key to modify the value. **TO CONFIRM**: push the SET key to confirm the value and exit.

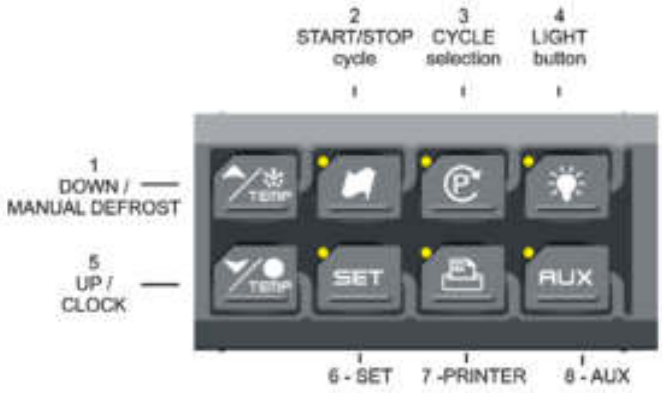



UP key: browse the menu:
- Min= minutes
- Hou= hours
- daY= day
- Mon= month
- YEA= year
- tiM= US/EUROPE time



In this exemplum the holding set point of the cycle 1 is modified.

HOW MODIFY A CYCLE:

1. Push the key (6) for several seconds till the first parameter (CyS) is displayed.
2. Use the UP and DOWN keys to browse the parameters.
3. To modify a parameter push the SET key and use the arrow keys.
5. Confirm the new value by pushing the SET key.
6. The new value is recorded even if the programming is exited by time out.



14.3 KEYBOARD WHEN A CYCLE 1,2,3,4 IS RUNNING

DISPLAY TEMPERATURES:

The **upper** display shows the temperature of the thermostat probe The **bottom** display shows the temperature of a insert probe (if enabled) or the count down timer.

By pushing the **DOWN** key the probes iP1, iP2, iP3 and the count down timer are displayed in sequence.





PHASE DISPLAY: pushing the **UP** key the running phase is displayed.



PH1= phase 1
PH2= phase 2
PH3= phase 3

HOW TO DISPLAY THE REGULATION SET POINTS

By pushing the SET key the following information are displayed in sequence:
- **rSI** = Room set point
- **iSI** = Stop phase set point, referred to the insert probe
- Back to the room temperature.





HOW TO MODIFY THE ROOM SET POINT

While rSI or iSI are displayed hold pushed the SET key till the rSi or iSi label start flashing and LED near the SET key is turned on..

Use the arrow key to modify the value and the SET key to confirm it.



14.4 KEYBOARD WHEN THE HOLDING CYCLE IS RUNNING (H)

HOW TO DISPLAY THE HOLDING (REGULATION) SET POINT

While the holding cycle is running, (H icon lighted), push the SET key and the holding set point is displayed on the UPPER display while the **SETH** label on the bottom display



HOW TO MODIFY THE ROOM SET POINT

While SETH is displayed hold pushed the SET key till the SETH label starts flashing and LED near the SET key is turned on..

Use the arrow key to modify the value and the SET key to confirm it.

TO CONFIRM AND EXIT: push again the SET key



14.5 OTHER KEYS

LIGHT (4): push the LIGHT (4) key to switch the light on and off. The status of the light is monitored by the yellow LED upper the key.

AUX (8): push the AUX (8) key to switch the auxiliary on and off. The status of the auxiliary relay is monitored by the yellow LED upper the key.

PRINTER / H (7): push the PRINTER key when the keyboard is connected to the controller, to enabled/ disable the printer.

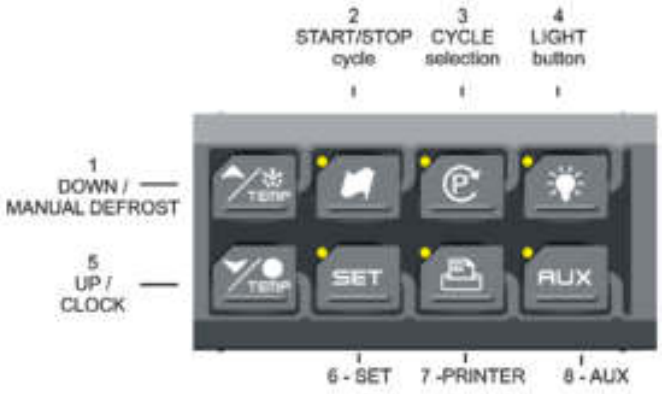

PRINTER CONFIGURATION MENU

Push the PRINTER (7) key for few seconds to enter the printer configuration menu.

The **itP**, label is displayed, use the ARROW keys to browse the parameters

To modify: push the **SET** key and then the ARROW keys.

To confirm: push the **SET** key

To exit the Printer menu: Push together SET + UP keys or wait 5 sec



UP key: browse the menu:
- itP= time printing interval.
- PbP= data to print.
- PAr= enabled the printing of the parameter map.
- Cyc= enabled the printing of cycle parameters .
- PtH= enabled the printing during the holding phase.
- PrS= level Pr1 o Pr2.
- Pnu= number of printing.

DOWN key back to the previous label.

14.6 HOW TO START A MANUAL DEFROST

Assure that none cycle is active or the hold mode is running.

1. Hold press the **UP** key fro few seconds.

NOTE: The defrost will not be done if the temperature detected by the evaporator probe is higher than EdF (stop defrost temperature) parameter.

14.7 OTHER FUNCTIONS OF KEYBOARD

	To lock & unlock the keyboard Pon/PoF
	To enter the programming mode when the controller is in stand-by Each parameter present in the Pr2 can be removed or put into “Pr1” (user level) by pressing **“SET + ▼”**.
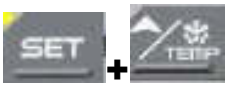	To return to the previous menu.

14.8 MEANING OF THE LEDS’

A series of light points on the front panels is used to monitor the loads controlled by the instrument. Each LED function is described in the following table.

LED	MODE	ACTION
	**ON**	- Compressor enabled
	**Flashing**	- Programming Phase (flashing with LED ) - Anti-short cycle delay enabled
	**ON**	- Fans enabled
	**Flashing**	- Programming Phase (flashing with LED ) - Activation delay active
	**ON**	- Defrost active
	**Flashing**	- Drip time active
①②③④ **H**	**ON**	- Freezing cycle 1, 2, 3, 4 or hold mode active
①②③④ **H**	**Flashing**	- Instrument temporarily stop
	**ON**	- Alarm signalling
AUX –AUX2	**ON**	- Aux or Aux2 enabled

15. How To Select A Cycle

1. Push the to move among the cycles C1, C2, C3, C4 and the holding cycle. The related symbol on the display will be lighted and the cycle will be selected.

NOTE: to pass from a cycle to another one simply push the key when the controller is in stand–by mode.

HOLD PHASE: To select **H** symbol pushing the .

Cycles are pre-set with the following values:

1. **Cy1:** for fast chilling and conservation of foods (hard +soft chill).
2. **Cy2:** for chilling and fast freezing avoiding ice skin (hard +soft + freezing cycle).
3. **Cy3:** for fast freezing (fast freezing + freezing cycle)
4. **Cy4:** for direct fast freezing (only fast freezing cycle)
5. **HLd:** hold mode function
6. **dEF:** for starting a manual defrost

2. Now the cycle is memorized and can be activated.

15.1 HOW TO MODIFY A CYCLE

1. Verify that none cycle is running. If one cycle is running stop it by pushing the key for 3s.

2. Push the to move among the cycles C1, C2, C3, C4 and the holding cycle. The related symbol on the display will be lighted and the cycle will be selected

3. Hold push the key for several seconds till the display will show the first parameter of the selected cycle (CyS) with its value.
4. Use the UP and DOWN keys to browse the parameters.
5. To modify a parameter push the SET key and use the arrow keys.
6. Confirm the new value by pushing the SET key.
7. The new value is recorded even if the programming is exited by time out.

TO exit: wait 30s or push the SET+UP keys.

16. Parameters

Hy Intervention differential for set point: (0,1 ÷ 12,0 /0,1°C/1°F), always positive. Compressor cut IN is Set Point Plus Differential (Hy). Compressor cut OUT is when the temperature reaches the set point.

AC Anti-short cycle delay: (0÷30 min) minimum interval between the compressor stop and the following restart.

PAU Time of stand by: (0 ÷ 60min) after this time the controller restart the cycle.

PFt Maximum acceptable duration of power failure: (0 ÷ 250 min) if power failure duration is less than PFt, the cycle restarts from the same point at which it was stopped otherwise the cycle restarts from

the beginning of the current phase.

Con Compressor ON time with faulty probe: (0÷ 255 min) time during which the compressor is active in case of faulty thermostat probe. With COn=0 compressor is always OFF

COF Compressor OFF time with faulty probe: (0÷255 min) time during which the compressor is off in case of faulty thermostat probe. With COF=0 compressor is always active

PROBES

rPO Thermostat probe calibration (-12,0 ÷ 12,0; res. 0,1 °C /1°F)

EPP Evaporator probe presence (not present in the XB350C): (no / YES) **no:** not present (timed defrost); **YES:** present (end defrost)

EPO Evaporator probe calibration (not present in the XB350C): (-12,0 ÷ 12,0; res. 0,1 °C /1°F)

i1P Insert probe 1 presence (no / YES) **no:** not present; **YES:** present.

i1o Insert probe 1 calibration (-12,0 ÷ 12,0; res. 0,1 °C /1°F)

i2P Insert probe 2 presence (no / YES) **no:** not present; **YES:** present.

i2o Insert probe 2 calibration (-12,0 ÷ 12,0; res. 0,1 °C /1°F)

i3P Insert probe 3 presence (no / YES) **no:** not present; **YES:** present.

i3o Insert probe 3 calibration (-12,0 ÷ 12,0; res. 0,1 °C /1°F)

rEM End cycle probe selection. (iPt, rP). It sets which probe stops teh the cycle, thermostat probe or insert probe.

iPt = insert probe;

rPt =thermostat probe

NOTE, with rEM = rPt when the cycles are done by temperature, the rSi values are used as stop of the cycle.

DISPLAY AND MEASUREMENT UNIT

CF Temperature measurement unit: °C =Celsius; °F =Fahrenheit

rES Resolution (for °C): **in**: integer; **de**: with decimal point

Lod Upper display visualization: select which probe is shown by the upper display:

rP = Thermostat probe

EP = Evaporator probe

rEd Remote display, X-REP, visualization: select which probe is displayed by the X-REP:

rP = Thermostat probe; **EP** = Evaporator probe; **tiM:** cycle count down; **i1P** = insert probe 1; **i2P** = insert probe 2; **i3P** = insert probe 3.

DIGITAL INPUTS

d1P: Door switch input polarity (25-26): (OP÷CL)select if the digital input is activated by opening or closing the contact. **OP=** opening; **CL=**closing

odc Compressor and fan status when open door:

no = normal;

Fan = Fan OFF;

CPr = Compressor(s) OFF;

F_C = Compressor(s) and fan OFF.

doA Open door alarm delay:(0÷254min,nu) delay between the detection of the open door condition and its

alarm signalling: the flashing message “dA” is displayed. If doA=nu the door alarm will be not signalled.

dLc Stop count down of the running cycle with door open y = count down is stopped with door openi; **n=** count down goes on with door open;

rrd Regulation restart with door open alarm: y = count down and regualtion restart when door open alarm is signalled.; **n =** compressor and fans stay according to the odc parameter when door open alarm is signalled.

d2F(EAL, bAL,) **Second digital input configuration (26-27): EAL**: external alarm; **bAL**: serious alarm, regulation is stopped.;

d2P: Configurable digital input polarity (26-27): (OP÷CL)select if the digital input is activated by opening or closing the contact. **OP=** opening; **CL**=closing

did Time delay for digital input alarm:(0÷255 min.) If d2F=EAL or bAL (external alarms), “did” parameter defines the time delay between the detection and the successive signalling of the alarm.

AUXILIARY RELAY CONFIGURATION

oA1 First auxiliary relay configuration (7-8):

ALL: alarm; **Lig:** light; **AuS:** Second thermostat; **tMr:** auxiliary relay enabled by keyboard

C2: Second compressor: it always is switched on during the Cycles, during the holding depends on the 2CH parameter

oA2 First auxiliary relay configuration (1-2):

ALL: alarm; **Lig:** light; **AuS:** Second thermostat; **tMr:** auxiliary relay enabled by keyboard

C2: Second compressor: it always is switched on during the Cycles, during the holding depends on the 2CH parameter

oA3 First auxiliary relay configuration (9-10)

ALL: alarm; **Lig:** light; **AuS:** Second thermostat; **tMr:** auxiliary relay enabled by keyboard

C2: Second compressor: it always is switched on during the Cycles, during the holding depends on the2CH parameter

SECOND RELAY MANAGEMENT

2CH Compressors setting during the holding phase: (used only if one OAi =C2)

The second compressor is always switched on during the phases, during the holding depends on this parameter.

The 2CH sets which compressor is used during the holding phase.

Second compressor operates on set + OAS. (whit set= set loaded during the holding phase of each cycle). It starts oAt min. after the first compressor

The following table shows how it works:

	Holding
2CH =C1	C1 on;
2CH =C2	C2 on
2CH =1C2	C1 on; C2 On

OAt Second compressor switching on delay: (0÷255 min) time delay between the switching on of the first and second compressor.

OAS Set point for second compressor (-50÷50; ris.1 °C/ 1°F) This set point is a differential add to the set point of the first compressor.

ES. OAS=0 the set point of the second compressor s the same set point of the first compressor.
OAS=5 the set point of the second compressor is SET (of first compressor) + 5;
OAS=-5 the set point of the second compressor is SET (of first compressor) - 5;

OAH Differential for second compressor: (-12.0÷12,0; ris.0,1°C/1°F, always ¹0) second compressor cut IN is SETH+OAS+OAH. Second compressor cut out is when the temperature SETH+OAS.

OAi Probe selection for the second compressor: rP =Thermostat probe; **EP** = Evaporator probe; **tiM:** cycle count down; **i1P** = insert probe 1; **i2P** = insert probe 2; **i3P** = insert probe 3.

AUXILIARY RELAY MANAGEMENT

OSt AUX output timer: (0÷255 min) time in which the AUX output stays ON. It is used when oA1 or oA2 or oA3 = tMr. With oAt = 0 the AUX relay is switched on and off only manually.

OSS Set point for AUX output, used when oA1 or oA2 or oA3 = AUS (-50÷50; ris.1 °C/ 1°F)

OSH Differential for AUX output: (-12.0÷12,0; ris.0,1°C/1°F, always ¹0) Intervention differential for the set point of the AUX output, with OAH<0 the action is for heating, with OAH>0 it is for cooling.

COOLING, OSH >0: AUX output cut IN is OSS+OAH. Second compressor cut out is when the temperature SETH+OAS.

HEATING, OSH <0: second compressor cut IN is OSS-OAH. Second compressor cut out is when the temperature OSS

OSi Probe selection for the second compressor: rP =Thermostat probe; **EP** = Evaporator probe; **tiM:** cycle count down; **i1P** = insert probe 1; **i2P** = insert probe 2; **i3P** = insert probe 3.

DEFROST

tdF Defrost type (not present in the XB350C): (**rE=** electrical heater; **in** = hot gas).

IdF Interval between defrost cycles: (0.1÷ 24.0; res. 10 min) Determines the time interval between the beginning of two defrost cycles. (with 0.0 the defrost is disabled)

dtE Defrost termination temperature: (-50÷50 °C/°F) Sets the temperature measured by the evaporator probe, which terminates the defrost. Used only if EPP =YES

MdF Maximum length for defrost: (0÷255 min) When EPP = no (timed defrost) it sets the defrost duration, when EPP = YES (defrost termination based on temperature) it sets the maximum length for defrost.

dFd Temperature displayed during defrost: (rt , it, SEt, dEF**) rt:** real temperature; **it:** temperature at the start of defrost; **SEt:** set point; **dEF:** “dEF” message

Fdt Drip time: (0 ÷ 60 min) Time interval between reaching defrost termination temperature and the restoring of the controllers' normal operation. This time allows the evaporator to eliminate water drops that might have formed during defrost.

dAd Defrost display time out: (0÷120 min) Sets the maximum time between the end of defrost and the restarting of the real room temperature display.

FANS

FnC Fans operating mode during the holding phase:
o-n = continuous mode, OFF during defrost;
C1n= runs in parallel with the first compressor, OFF during defrost;
C2n= runs in parallel with the second compressor, OFF during defrost;

Cn= runs in parallel with compressors, OFF during defrost;
o-Y = continuous mode, on during defrost;
C1y= runs in parallel with the first compressor, on during defrost;
C2y= runs in parallel with the second compressor, on during defrost;
Cy= runs in parallel with compressors, on during defrost;

FSt Fan stop temperature: (-50÷50°C/°F; res. 1°C/1°F).It used only if the EPP = yES. If the temperature. detected by the evaporator probe is above FSt fans are stopped. It serves to avoid blowing warm air in the room.

AFH Differential for the stop temperature and for the alarm (0.1 ÷ 25.0 °C; ris.0.1°C/1°F) Fans carry on working when the temperature reaches the FSt-AFH value, the temperature alarm recovers when the temperature is AFH degrees below the alarm set.

Fnd Fan delay after defrost: (0 ÷ 255 min) The time interval between end of defrost and evaporator fans start.

TEMPERATURE ALARMS

ALU MAXIMUM temperature alarm (it is used only during the holding phase): (1 ÷ 50 °C/°F) When the “SET+ALU” temperature is reached the alarm is enabled, (possibly after the “ALd” delay time).

ALL Minimum temperature alarm (it is used only during the holding phase): (1÷50°C/1°F) When the “SET-ALL” temperature is reached the alarm is enabled, (possibly after the “ALd” delay time).

ALd Temperature alarm delay (it is used only during the holding phase): (0÷255 min) time interval between the detection of an alarm condition and alarm signalling.

EdA Temperature alarm delay at the end of defrost (it is used only during the holding phase): (0 ÷ 255 min) Time interval between the detection of the temperature alarm condition at the end of defrost and alarm signalling.

tbA Silencing alarm relay: (Yes= silencing buzzer and alarm relay, no= only buzzer silencing).

CYCLE LOG

tCy duration of the last cycle (readable only);
tP1 duration of first phase of the last cycle (readable only);
tP2 duration of second phase of the last cycle (readable only);
tP3 duration of third phase of the last cycle (readable only);

OTHER

Adr Address for RS485: (1 ÷247)

bUt Buzzer activation at the end of the cycle (0÷60s; with 0 the buzzer is on till a key is pushed)

tPb Kind of probe: it sets the kind of probe used:
ntc = NTC o **Ptc =** PTC.

rEL Release code (readable only)

Ptb Parameter code (readable only)

17. How A Cycle Is Done

1. Every programmable cycle Cy1, Cy2, Cy3 or Cy4 can be divided into up to 3 phases usually called:
   • **hard chill**

- **soft chill**
- **freezing cycle**

2. For each phase there are 3 parameters.

iS1, (iS 2, iS 3): Set point related to the insert probes that stops the current phase.

rS1, (rS2, rS3): set point of the room temperature for each phase.

Pd1, (Pd2, Pd3): the maximum duration time for each phase.

Hds : set point of the hold phase at the end of the whole cycle.

There are also 3 parameters:

first one concerning the cycle way of doing the cycle: by temperature or by time, the other two are related to the defrost. These are **dbC =** defrost before cycle, **dbH =** defrost before holding (at the end of the cycle).

17.1 CONFIGURABLE CYCLE PARAMETERS

cyS Cycle setting: tEP = by temperature. the cycle is done according to the **rEM** parameter; **tiM:** timed cycle, based on the Pd1, Pd2, Pd3 parameters.

dbc (yes/no) **Defrost before the cycle**

iS1 (-50÷50°C;1°C/1°F) **Insert Probe Set point**: when the temperature measured by the three insert probes reaches this value the first phase is ended.

rS1(-50÷50°C; 1°C/1°F) Room probe Set point for the first phase: it prevents temperature from reaching a too low value during the hard cycle.

Pd1 (OFF÷4.0h;10 min)**Maximum time for first phase**

iS2 (-50÷50°C; 1°C/1°F) **Insert probe set point** when the temperature measured by the three insert probes reaches this value the second phase is ended.

rS2 (-50÷50°C; 1°C/1°F) **Room probe Set point** for the second phase: it prevents temperature from reaching a too low value during the second phase.

Pd2 OFF÷4.0h; **res.** 10 min **Maximum time for second phase.**

iS3 (-50÷50°C; 1°C/1°F) **Insert Probe Set point** to stop the third (and last) phase: when the temperature measured by the three insert probes reaches this value the third phase is ended.

rS3 (-50÷50°C; 1°C/1°F) **Room probe Set point** for the third (and last) phase: it prevents temperature from reaching a too low value during the third (and last) phase.

Pd3 (OFF÷4.0h; 10 min) **Maximum time for the third phase.**

dbH (yes / no) defrost before the hold phase

HdS (-50÷50 - OFF; 1 °C / 1°F) Set point of the holding phase. With “OFF” the hold phase is disabled.

IMPORTANT NOTE: If the duration time of a phase is set at the OFF value, the corresponding phase is disabled. E.g. If **Pd3=** 0FF the third phase of the cycle is not active.

17.2 HOW TO USE THE INSERT PROBES

By means the insert probe, the internal temperature of products can be checked. This measure is used to end the various phase of the cycle. A special internal function detect if the inset probe is not used, in this case the cycle is made by time

17.3 EXAMPLE OF A BLAST CHILLER CYCLE.

The following drawing explains how a Blast Chiller cycle can be done.

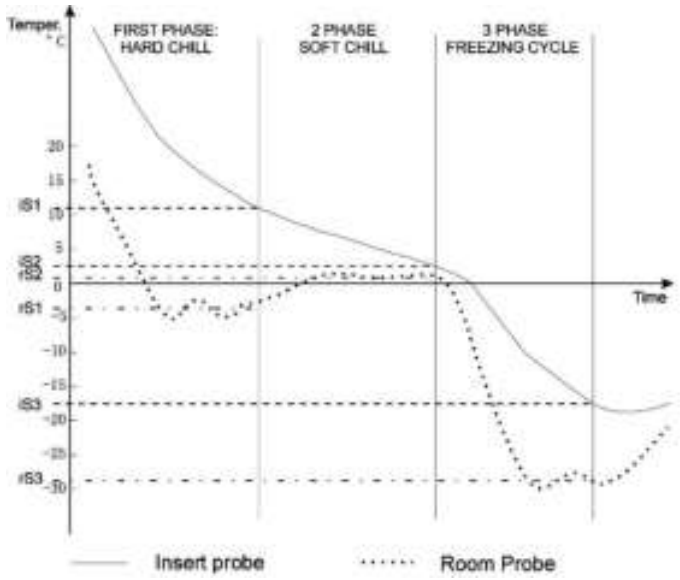

17.3.1 First phase: "Hard chill".

It is normally used to fast chill hot foods. E.g. from 80°C / 170°F to 20°C / 70°F

During "**Hard Chill**", both compressor and fan are always on until the **rS1** temperature is reached. At this point compressor is turned on end off so as to keep the temperature of the room at the **rS1** value.

"Hard Chill" ends when the temperature measured by the 3 insert probes reach the **iS1** value.

17.3.2 Second phase: "Soft chill".

The **Soft Chill** starts when the Hard Chill ends. It is used to prevent thin layer of ice from forming on the product. The Soft Chill lasts until the temperature measured by the 3 insert probes reach the set point **iS2** (usually 4 or 5°C).

During Soft Chill the temperature of the room is regulated by the ambient probe with the set point **rS2** (normally at 0 or 1 °C / 32 or 34°F). When the box temperature reaches the **rS2** value compressor is turned on end off so as to keep the temperature of the box at this value.

17.3.3 Third phase: "Freezing cycle".

Freezing Cycle: used to fast freeze foods.

The Freezing Cycle starts when the Soft Chill ends. During the "Freezing Cycle" both compressor and fan are always on until the **rS3** temperature is reached. At this point compressor and fans are turned on end off so as to keep the temperature of the room at the **rS3** value (normally some degrees below **iS3)**.

Freezing Cycle ends when the temperature measured by the 3 insert probes reach the **iS3** value (normally -18°C / 0°F), in any case it ends when the maximum time **Pd1 + Pd2 + Pd3** has expired.

17.3.4 End of the Blast Chill cycle and starting of the Hold Mode.

When one of the three insert probes reaches the iS3 value the values End followed by the i1P or i2P or i3P are shown on the display.

Cycle ends when all the probes have reached the iS3 value. A signal is generated: buzzer and alarm relay is turned ON, the display shows the message "End" alternating with the room temperature.

The alarm automatically stops after the "**but**" time or by pressing any keys.

At the end of the cycle the controller can start the "Hold mode" keeping the room temperature at the value set in HdS parameter.

If HdS = OFF, the machine is turned OFF.

NOTE1: with **dbH = yES** a defrost is done before the holding phase.

NOTE2: If the end cycle temperature iS3 is not reached in the maximum time Pd1+Pd2+Pd3 the

instrument keep on working, but the alarm message **“OCF”** is given.

18. Installation and mounting

Instruments **XB570L** shall be mounted on vertical panel, in a 150x31 mm hole, and fixed using two screws ø 3 x 2mm. To obtain an IP65 protection grade use the front panel rubber gasket (mod. RG-L). The temperature range allowed for correct operation is 0 - 60 °C. Avoid places subject to strong vibrations, corrosive gases, excessive dirt or humidity. The same recommendations apply to probes. Let the air circulate by the cooling holes.

18.1 CUT OUT

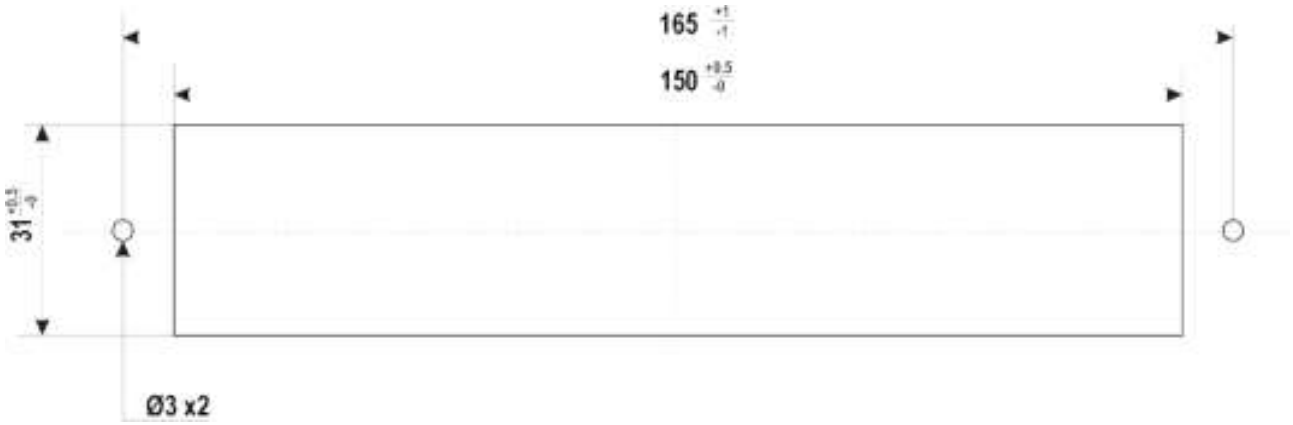

18.2 MOUNTING

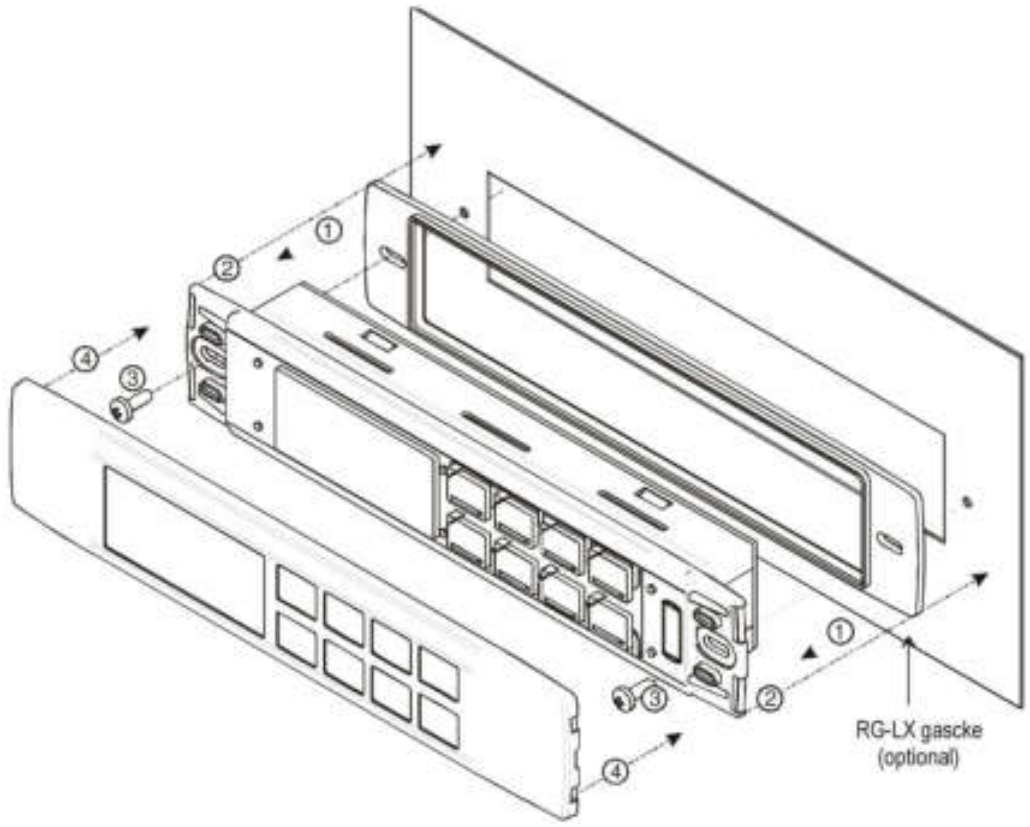

19. XB07PR - Printer (optional)

The XB570L is designed to work with the XB07PR.
The XB07PR kit is composed by:
1. Printer
2. Power adapter
3. Connecting cables

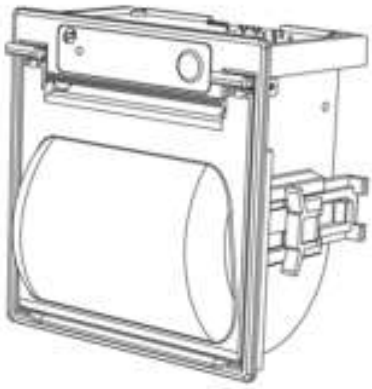

19.1 PRINTER DIMENSIONS

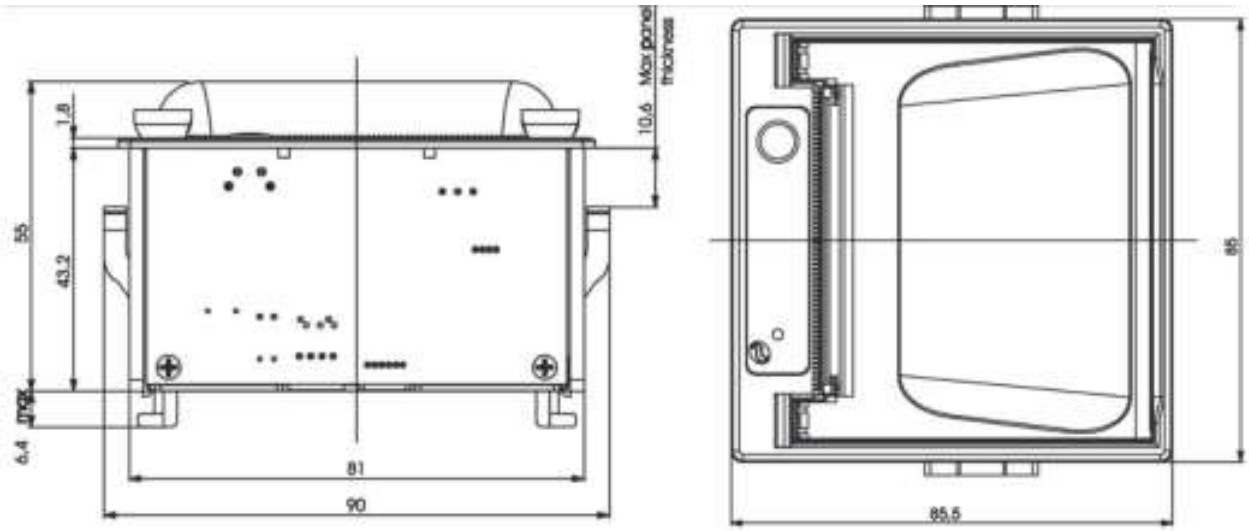

19.2 PRINTER MOUNTING

SCREW FIXING

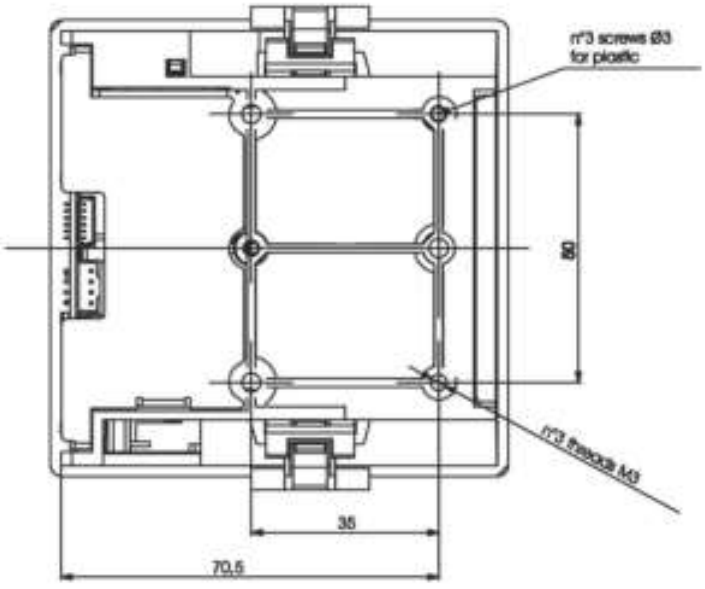

PANEL CUT OUT

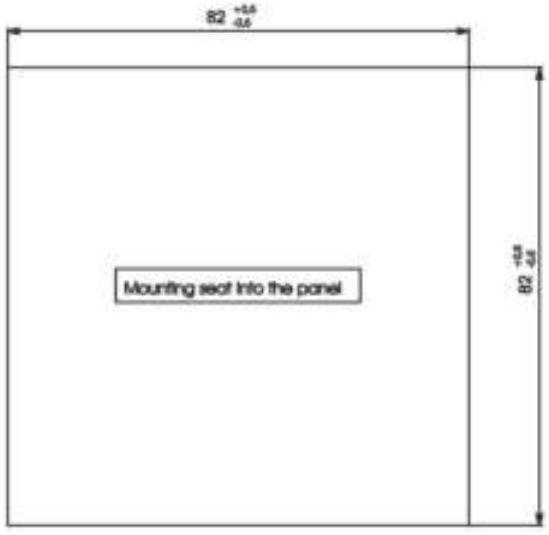

19.3 CONNECTION TO THE XB570L – XB07PR

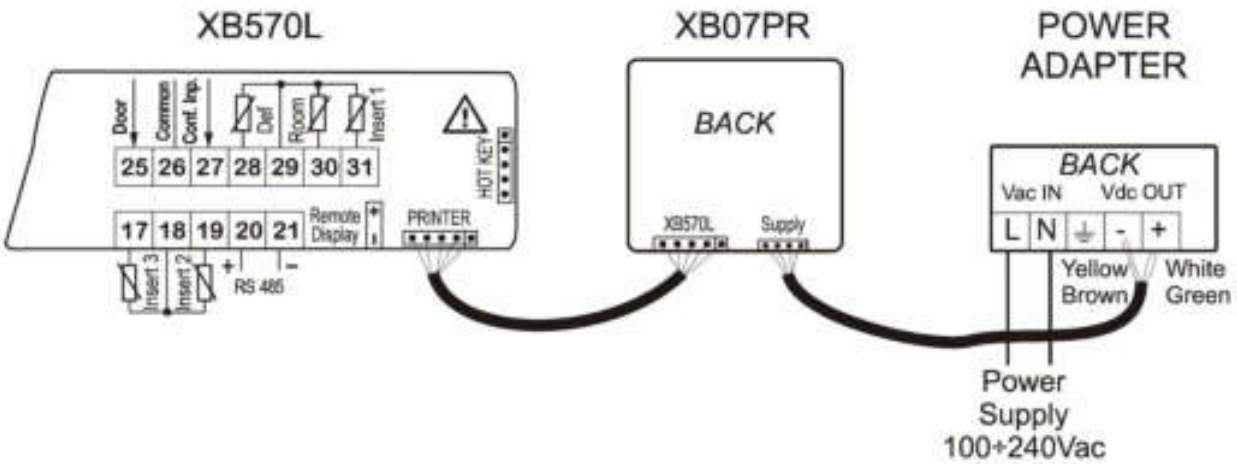

20. Electrical connections

The instruments are provided with screw terminal block to connect cables with a cross section up to 2,5 mm2 for the digital and analogue inputs. Relays and power supply have a Fast on connection (6,3mm). Heat resistant cables have to be used. Before connecting cables make sure the power supply complies with the instrument's requirements. Separate the probe cables from the power supply cables, from the outputs and the power connections. Do not exceed the maximum current allowed on each relay, in case of heavier loads use a suitable external relay.
N.B. Maximum current allowed for all the loads is 20A.

20.1 PROBE CONNECTIONS

The probes shall be mounted with the bulb upwards to prevent damages due to casual liquid infiltration. It is recommended to place the thermostat probe away from air streams to correctly measure the average room temperature.

21. TTL Serial line

The TTL connector allows, by means of the external module TTL/RS485, to connect the unit to a network line **ModBUS-RTU** compatible as the DIXEL monitoring system XJ500 (Version 3.0).
The same TTL connector is used to upload and download the parameter list of the "**HOT KEY**".

22. Use of the programming "HOT KEY"

The Wing units can UPLOAD or DOWNLOAD the parameter list from its own E2 internal memory to the **"Hot Key"** and vice-versa.

22.1 DOWNLOAD (FROM THE "HOT KEY" TO THE INSTRUMENT)

1. Turn OFF the instrument by means of the ON/OFF key, remove the TTL serial cable if present, insert the **"Hot Key"** and then turn the Wing ON.

2. Automatically the parameter list of the **"Hot Key"** is downloaded into the Wing memory, the "**DoL**" message is blinking. After 10 seconds the instrument will restart working with the new parameters.
3. Turn OFF the instrument remove the **"Hot Key",** plug in the TTL serial cable, then turn it ON again.

At the end of the data transfer phase the instrument displays the following messages:
"**end** " for right programming. The instrument starts regularly with the new programming.
"**err**" for failed programming. In this case turn the unit off and then on if you want to restart the download again or remove the "**Hot key**" to abort the operation.

22.2 UPLOAD (FROM THE INSTRUMENT TO THE "HOT KEY")

1. Turn OFF the instrument by means of the ON/OFF key and remove the TTL serial cable if present; then turn it ON again.
2. When the Wing unit is ON, insert the "**Hot key**" and push o key; the **"uPL"** message appears.
3. Push "**SET"** key to start the UPLOAD; the "**uPL**" message is blinking.
4. Turn OFF the instrument remove the **"Hot Key",** plug in the TTL serial cable, then turn it ON again.

At the end of the data transfer phase the instrument displays the following messages:
"**end** " for right programming.
"**err**" for failed programming. In this case push "SET" key if you want to restart the programming again or remove the not programmed "**Hot key**".

23. ALARM SIGNALS

Mess	Cause	Outputs
"EE"	Data or memory failure	Alarm output ON; Other outputs unchanged
"rPF"	Thermostat Probe failure	Alarm output ON; Compressor output according to parameters "COn" and "COF"
"EPF"	Evaporator Probe failure	Alarm output ON; Defrost termination is timed; No temperature control on fans.
"i1P" **"i2P"** **"i3P"**	Insert probe 1, 2, 3, failure	Alarm output ON; Other outputs unchanged; The cycle is made by time
"rtC"	Real Time Clock data lost	Alarm output ON; Other outputs unchanged;
"rtF"	Real Time Clock failure	Alarm output ON; Other outputs unchanged; The date and the duration of the cycle are not available.
"HA"	Maximum temperature alarm	Alarm output ON; Other outputs unchanged
"LA"	Minimum temperature alarm	Alarm output ON; Other outputs unchanged.
"FF"	Fast freezing interrupted by shortpower failure	Alarm output ON; The freezing cycle restart from the same point at which was interrupted.
"PFA"	Fast freezing interrupted by long power failure	Alarm output ON; The freezing cycle restart from the current phase.
"OCF"	Max duration of the cycle is expired	Alarm output ON; Other outputs unchanged. In any case the cycle ends when the final temperature is reached
"EA"	External alarm	Alarm output ON; Other outputs unchanged.
"CA"	Serious external alarm	Alarm output ON; Other outputs OFF.
"dA"	Door open alarm	Alarm output ON; Other outputs unchanged.

24. Technical data

Housing: self extinguishing ABS.
Case: frontal 185x38 mm; depth 70mm;
Mounting: panel mounting in a 150x31mm panel cut-out
Frontal protection: IP65
Connections: Screw terminal block £ 2,5mm² wiring.
Power supply: 230Vac, ±10%
Power absorption: 5VA max.
Display: dual display
Inputs: 5 PTC or NTC probes
Relay outputs:

- **compressor:** relay SPST 20(8)A or 8(3) A, 250Vac
- **defrost::** relay 8(3)A, 250Vac
- **fans:** relay SPST 8(3)A, 250Vac
- **Light :** relay SPST 16(6)A, 250Vac
- **Aux1 :** relay SPST 8(3)A, 250Vac
- **Aux2 :** relay SPST 16(6)A, 250Vac

Serial output: RS232 serial output for XB07PR printer connection
Serial output: TTL serial output for monitoring system (MODBUS-RTU) protocol
Data storing: on the non-volatile memory (EEPROM).
Operating temperature: 0÷60 °C.
Storage temperature: -30÷85 °C.
Relative humidity: 20÷85% (no condensing)
Measuring range: -55÷50 °C
Resolution: 0,1 °C or 1 °F (selectable).
Accuracy of the controller at 25°C: ±0,3 °C ±1 digit

25. Standard Value of the cycles

Cy1: for fast chilling and conservation of foods at positive temperature		
CyS = tEP	**iS2 =** 5°C	**Pd3** = OFF
dbC = not	**rS2** =+2°C	**dbH** = yes
iS1 = 8°C	**Pd2** = 3.0 h	**HdS** = 2°C
rS1= -10°C	**iS3** = 5°C	
Pd1 = 2.0 h	**rS3**=+2°C	

Cy2: for chilling and fast freezing of foods with holding		
CyS = tEP	**iS2** = 5°C	**Pd3** = 4.0 h
dbC = no	**rS2**= -2°C	dbH = YES
iS1 = 10°C	**Pd2** = 3.0 h	HdS =-21°C
rS1 = -10°C	**iS3**=-18°C	
Pd1 = 2.0 h	**rS3**=-28°C	

Cy3: direct fast freezing with holding		
CyS = tEP	**iS2**=-18°C	**Pd3** = 4
dbC = no	**rS2**=-28°C	dbH = yes
iS1 = -18°C	**Pd2** =OFF	HdS = -21°C
rS1=-30°C	**iS3** =-18°C	
Pd1 = 4.0	**rS3**=-28°C	

Cy4: direct fast freezing without holding		
CyS = tEP	**iS2**=-18°C	**Pd3** = OFF
dbC = not	**rS2**=-28°C	**dbH** = no
iS1 =-18°C	**Pd2** =OFF	**HdS** = OFF
rS1=-30°C	**iS3**=-18°C	
Pd1 = 4.0	**rS3**=-28°C	

26. Standard Values of the parameters

Lab	Description	Values	Level
Set	Set point	3	- - -
Hy	differential	4.0	Pr1
AC	Anti-short cycle delay	2	Pr2
PAU	Time of stand by	20	Pr2
PFt	Maximum acceptable duration of power failure	15	Pr2
Con	Compressor ON time with faulty probe	10	Pr2
COF	Compressor OFF time with faulty probe	10	Pr2
rPO	Thermostat probe calibration	0.0	Pr2
EPP	Evaporator probe presence	YES	Pr2
EPO	Evaporator probe calibration	0.0	Pr2
i1P	Insert probe 1 presence	YES	Pr2
i1o	Insert probe 1 calibration	0.0	Pr2
i2P	Insert probe 2 presence	n	Pr2
i2o	Insert probe 2 calibration	0	Pr2
i3P	Insert probe 3 presence	n	Pr2
i3o	Insert probe 3 calibration	0	Pr2
rEM	Probe selection to stop chilling cycle	iPt	Pr2
CF	Temperature measurement unit	°C	Pr2
rES	Resolution (for °C):	in	Pr2
Lod	Local display	rP	Pr2
rEd	Remote display	rP	Pr2
d1P	Door switch polarity	cL	Pr2
Odc	Open door control	F-C	Pr2
dOA	Open door alarm delay	5	Pr2
dLc	Stop count down of running cycle	y	Pr2
rrd	Regulation restart after door open alarm	Y	Pr2
d2F	Second digital input function	EAL	Pr2

Lab	Description	Values	Level
d2P	Second digital input polarity	cL	Pr2
did	Time delay for digital input alarm	5	Pr2
oA1	First configurable relay function	tMr	Pr2
oA2	Second configurable relay function	ALL	Pr2
oA3	Third configurable relay function	Lig	Pr2
2CH	Compressor setting during the holding	C1	Pr2
OAt	Second compressor switching on delay	3	Pr2
OAS	Set point for second compressor	0	Pr2
OAH	Differential for second compressor	2.0	Pr2
OAi	Probe selection for second compressor	rP	Pr2
OSt	Auxiliary output timer	0	Pr2
OSS	Set point for auxiliary output	0	Pr2
OSH	Differential for auxiliary output	2.0	Pr2
OSi	Probe selection for auxiliary output	rP	Pr2
tdF	Defrost type	in	Pr2
IdF	Interval between defrost cycles	6.0	Pr2
dtE	Defrost termination temperature	6	Pr2
MdF	Maximum length for defrost	20	Pr2
dFd	Temperature displayed during defrost	set	Pr2
Fdt	Drip time	2	Pr2
dAd	Defrost display time out	20	Pr2
FnC	Fan operating mode	o_n	Pr2
FSt	Fan stop temperature	15	Pr2
AFH	Differential for the stop temperature and for the alarm	10	Pr2
Fnd	Fan delay after defrost	2	Pr2
ALU	MAXIMUM temperature alarm	30	Pr2
ALL	Minimum temperature alarm	30	Pr2
ALd	Temperature alarm delay	15	Pr2
EdA	Alarm delay after defrost	30	Pr2
tbA	Silencing alarm relay	YES	Pr2
tCy	Duration of last cycle	- - -	Pr1
tP1	Duration of first phase of the last cycle	- - -	Pr1
tP2	Duration of second phase of the last cycle	- - -	Pr1
tP3	Duration of third phase of the last cycle	- - -	Pr1
Adr	Address for RS485:	1	Pr2
bUt	Buzzer activation at the end of the cycle	30	Pr2
tPb	Type of probe	ntc	Pr2
rEL	Release code (readable only)	2.0	Pr2
Ptb	Parameter code (readable only)	1	Pr2