OPERATION INSTRUCTION FOR HFM-STYLE MEAT MINCER



INTRODUCTION

●Thanks for using HFM-style stainless steel meat mincer. The appliance can be operated easier and more safe than other similar appliance.

●This instruction manual gives the customer all the necessary information about the appliance and the manufacturing standards applied, as well as all instructions for use and maintainance so that the appliance can be used correctly maintaining its efficiency in time.

●This instruction manual is for the end user and for service personnel

● In order to ensure the stability and safety of the production, the appliance has passed through dielectric voltage withstand test,earth resistance test,power leakage test and normal temperature test before leaving factory.

INDEX

1 INFORMATION ABOUT THE APPLIANCE
- **1.1 GENERAL WARNINGS**
- **1.2 SAFETY FEATURES INSTALLED**
- **1.3 APPLIANCE DESCRIPTION**
- **1.3.1 GENERAL DESCRIPTION**
- **1.3.2 CONSTRUCTIVE CHARACTERISTICS**
- **1.3.3 APPLIANCE ELEMENTS**

2 TECHNICAL DATA

3 CONSIGNING THE APPLIANCE
- **3.1 CHECKING PACKAGING UPON CONSIGNMENT**
- **3.2 DISPOSING OF PACKAGING**

4 INSTALLING THE APPLIANCE
- **4.1 APPLIANCE LOCATION**
- **4.2 WIRING DIAGRAMS**

5 USING THE APPLIANCE
- **5.1 SETTING UP THE APPLIANCE FOR USE**
- **5.2 FILLING THE MINCER**

6 REGULAR CLEANING
- **6.1 GENERALITIES**
- **6.2 PROCEDURE TO FOLLOW FOR CLEANING THE APPLIANCE**

7 MAINTENANCE
- **7.1 GENERALITIES**
- **7.2 FOOT SUPPORTS**
- **7.3 POWER SUPPLY CABLE**
- **7.4 PUSH BUTTON LABEL**
- **7.5 DISK AND BLADE**

8 EXPLOSIVE AND LIST

9. ABONDON
- **9.1 UNMAINTAINABLE**
- **9.2 ABONDON**

10. PACKING LIST

1 INFORMATION ABOUT THE APPLIANCE

1.1 GENERAL WARNINGS

- The appliance must only be used by personnel who has carefully studied this manual and understood all the safety standards described herein.
- If there should be a turnover in personnel, it is necessary that this manual is carefully studied before using the appliance.
- Although safety devices are installed on the appliance, avoid touching the moving parts with your hands and avoid touching the appliance with wet hands.
- When cleaning or servicing the HFM-style meat mincer(safety protections removed) take into consideration all possible hazards-Residual Risks.
- When cleaning or servicing the appliance always concentrate on what you are doing and avoid any possible distractions.
- Check the electricity power cable on a regular basis (to avoid electrical hazards and twists in the cable always completely unwind it);a worn or damaged cable causes a dangerous electrical hazard;aviod pressing the cable with weights or leaving it on hearted or sharp cutting Surfaces and avoid pulling the cable to remove the plug from the socket.
- If the HFM-style meat mincer has a presumed malfunction or does not work correctly, do not use it or repair it. Contact the “Service Centre”.
- This appliance is designed for only mincing meat in the mincer.Do not use this appliance for frozen food or non-food products and do not insert any metallic objects into the mincer .

The manufacturer cannot be held responsible for the following situations:

- If the appliance or safety devices are tampered with by unauthorized personnel;
- If non-original spare parts are used;
- If the instructions given in this manual are not carefully followed or respected;
- If unsuitable cleaning products (inflammable, corrosive or toxic) are used to clean the appliance.

1.2 SAFETY FEATURES INSTALLED

The HFM-style meat mincer is fitted out with electrical and mechanical safety protections that conform to the standards in force .These protections are for when the appliance is working and when it is being cleaned or serviced .However ,there are RESIDUAL RISKS that cannot be completely eliminated and are indicated by the wording CAUTION in this manual. These risks refer to the risk of being cut or injured when handling the blade on the HFM-style meat mincer while cleaning.

1.3 APPLIANCE DESCRIPTION

1.3.1 GENERAL DESCRIPTION

- We have designed and manufactured the HMF-style meat mincer guaranteeing;
- The maximum of hygiene thanks to a meticulous selection of the materials that come in contact with the food product, and thanks to the elimination of any sharp and rough edges that comes in contact with the product, cleaning is easy and thorough;
- The appliance can be easily stripped
- Robust and stable components and structure
- Maximum reduced noise level thanks to the geared transmission and oil bath
- Easy to handle

1.3.2 CONSTRUCTURE CHARACTERISTICS

The HFM-style meat mincer is made from stainless steel for food appliances. These metals are ideal regarding hygiene, they are also acid and salt resistant are also rust proof.

1.3.3 APPLIANCE **COMPONENTS**

FIG 1-General view of the HFM-style meat mincer

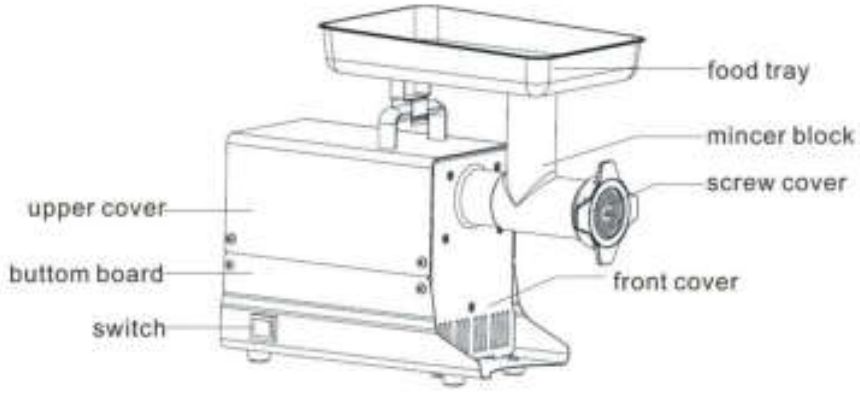

2 TECHNICAL DATA

FIG-2 TECHNICAL CHARACTERISTICS

Model	HFM-08	HFM-12	HFM-22	HFM-32
Voltage	110V/60Hz OR220-240V/50Hz			
Power	250W	550W	750W	1100W
Holes in disk	3mm	5mm	8mm	8mm
Production: Max	75kg/h	160kg/h	220kg/h	500kg/h
Weight	15.00kgs	17.00kgs	23.10kgs	25.50kgs
Measurement	565*260*465	565*260*465	645*305*500	645*305*500

3 CONSIGNING THE APPLIANCE

3.1 CHECKING PACKAGING UPON CONSIGNMENT

When the goods are received proceed with opening the packaging if there are no signs of damage. if when the goods are delivered there are signs of damage to the packaging, such as agent or courier, and within three days from the date indicated on the documents draw up a detailed list and report of all damage to the goods**. Do not turn the packed goods upside down!** When transporting the package make sure its four main points are firmly secured (maintain the goods parallel to the ground).

3.2 DISPOSING OF PACKAGING

The various items used for packaging (cardboard, pallets, plastic straps, polyurethane foam) are normal urban waste products and can be disposed of without difficulty.

If the appliance is destined to countries where are specific standards regarding waste, dispose of packaging respecting the standards and laws in force.

4 INSTALLING THE APPLIANCE

4.1 APPLIANCE LOCATION

4.1.1 The work surface where the HFM-style meat mincer will be located must be suitable for the size of the appliance, please refer to the measurements given in FIG 2.The work surface must be level and dry and at a height of 80 cm from the ground with a temperature between 5℃ and 35℃.

4.1.2 The power cord connected with the appliance must be reliable grounding.

4.2 WIRING DIAGRAMS

FIG 3-Illustration

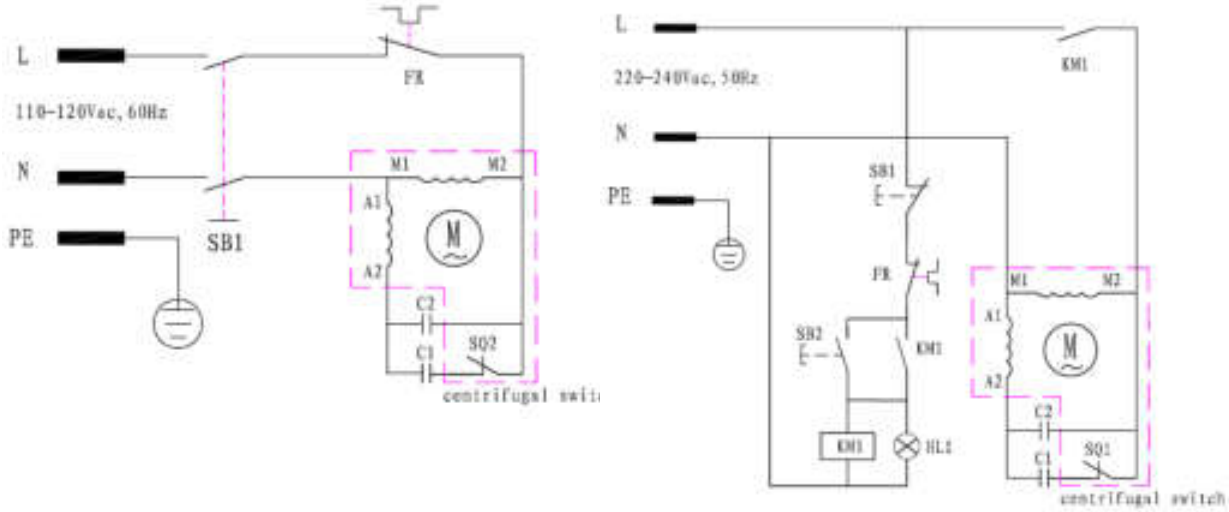

5 USING THE APPLIANCE

5.1 SETTING UP THE APPLIANCE FOR USE

N.B before using the appliance makes sure all the components that can be removed are secured in position (see fig 6)

- Mount the mincer outlet and block it into position using the handle located on the side of the union;
- Mount the screw feeder, blade and disk, and then screw on the lock nut.

HFM08/HFM12

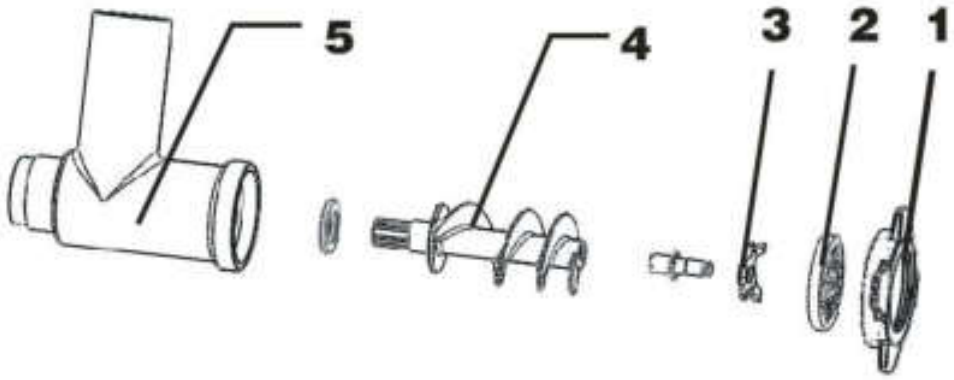

HFM22/HFM32

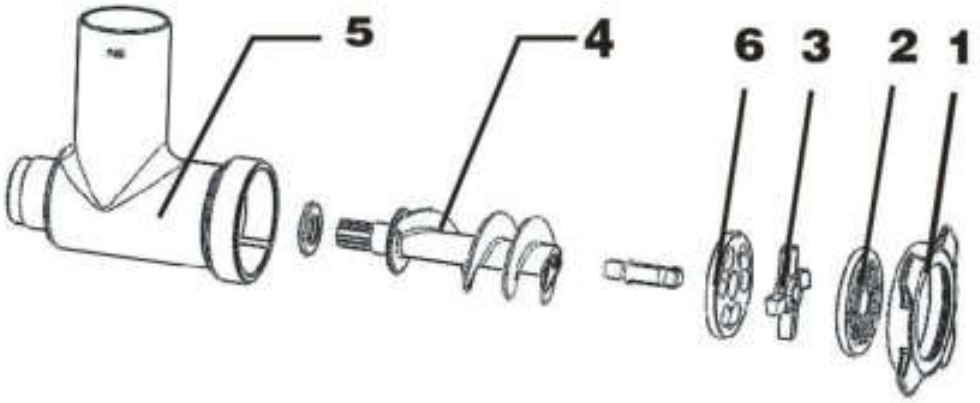

HMF8/HMF12 MEAT MINCER INSTALLMENT PROCEDURE:

1） install shell(fig 5)into body,and install the knob into the hole of the front cover.

2） install screw feeder (fig4)into shell and make sure the placement of knob is right.

3） install knife on screw feeder and then install blade(fig 2)

4） All the components is fixed by heel cover to ensure the safety.

HMF22/HMF32 MEAT MINCER INSTALLMENT PROCEDURE:

5） install shell(fig 5)into body,and install the knob into the hole of the front cover.

6） install screw feeder (fig4)into shell and make sure the placement of knob is right.

7） install knife on screw feeder and then install blade(fig 2)

8） All the components is fixed by mincer block to ensure the safety.

5.2 FILLING THE MINCER(see fig5)

When using the mincer it is important that you stand in the correct position. **Do not position yourself so that any part of your body comes In direct contact with the mincer when working.**

FIG 5-fitting the mincer

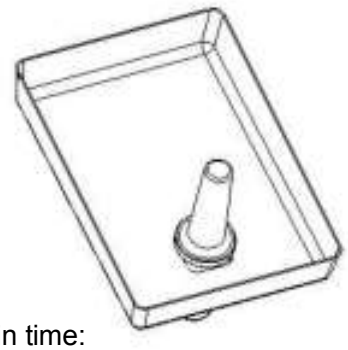

N.B The mincer must be filled when working. The procedure to follow is:

1. Place the food in the tray;
2. Start the mincer using the start button.
3. Raise the pestle; feed the meat into the tube; Without forcing use the pestle to push the meat into the opening.
4. If the meat suitably cut beforehand there should be no problems with the screw feeder,however,if there are problems tighten the lock nut until the meat is cut to desired size.
5. So both the disk and blade last longer and to maintain their sharpness in time:
   - When all the meat has been minced turn off the appliance;
   - Blade and disk must always be coupled.
6. Do not tighten the lock nut excessively;
7. Press the stop button when you have finished using the appliance, then strip the appliance and thoroughly clean both the opening and all other components.

6 REGULAR CLEANING

6.1 GENERALITIES

- The appliance clean must be cleaned at least once a day or if necessary more than once.
- Scrupulously clean all the various components of the HMF style meat mincer whether they come in direct contact with the food product or not.
- Never clean the HMF style meat mincer with a pressurized water-jet, industrial cleaners, and brushes or any other type of cleaning utensil that could damage the surface of the appliance.
- Before cleaning you must **remove the electricity supply plug isolating the appliance from the main power circuit.**

6.2 PROCEDURE TO FOLLOW FOR CLEANING THE APPLIANCE(see fig 6)

- remove the pestle and food tray;
- unscrew the lock nut and remove the disk:, blade screw feeder, unscrew in the direction indicated by the arrow.
- unscrew the knob and remove the mincer, always in the direction indicated by the arrow.

Now all the components can be washed using warm water (50 ℃) and a neutral detergent.
To clean the main structure use a damp cloth remember to frequently rinse
The grater roller mounted on the HFM-style meat mincer should be brushed cleaned. Carefully clean the punched holes. Make sure all the components are completely dry before remounting them.

7 MAINTENANCE

7.1 GENERALITIES

Before servicing the appliance you must disconnect the electricity supply plug isolating the appliance from the main power source.

7.2 FOOT SUPPORTS

In time the foot supports can deteriorate causing instability. If this is the case replaces them.

7.3 POWER SUPPLY CABLE

Periodically check wear in the power cable and if necessary contact the “SERVICE CENTRE” for a replacement.

7.4 PUSH BUTTON LABEL

In time the label on the could become marked or even damaged. If this should happen contact the “SERVICE CENTRE” for a replacement.

7.5 DISK AND BLADE

Both the blade and disk can deteriorate in time. If this should happen contact the “SERVICE CENTRE” for original replacements.

8 EXPLOSIVE AND LIST

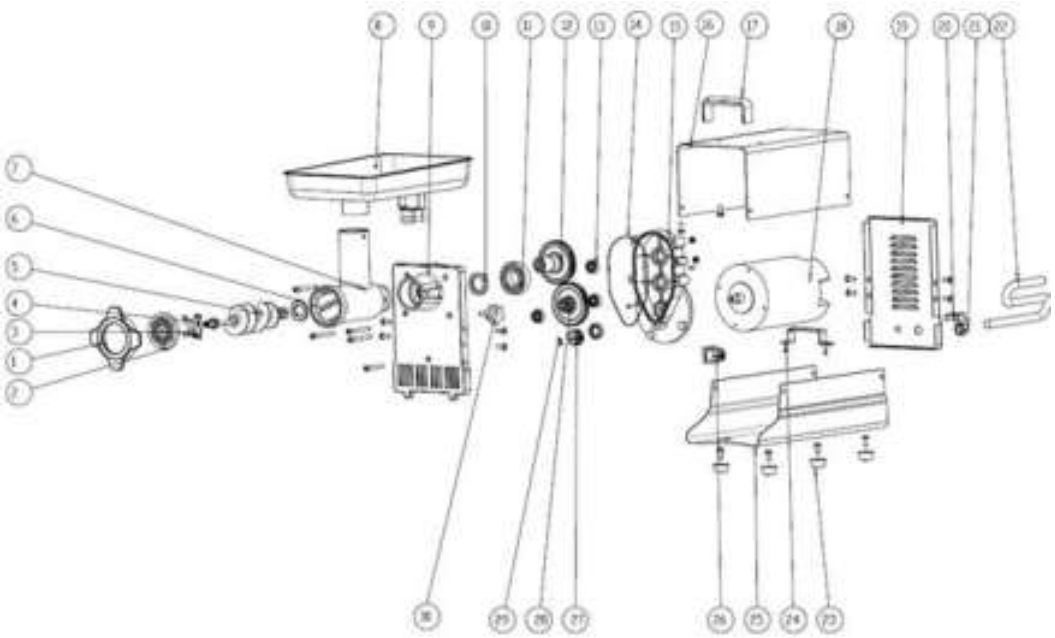

1	handpiece nut	2	pore plate	3	screwdrivers	4	blade shaft
5	spiralpush rod	6	nylon mat	7	Hand piece	8	food tray
9	Front cover	10	Oil seal	11	bearing	12	Spline shaft
13	bearing	14	O style ring	15	Back cover	16	Upper cover
17	handle	18	motor	19	back cover board	20	Overload switch
21	fixer	22	cable	23	feet	24	motor supplier
25	bottom board	26	On-off switch	27	Small gear	28	Dual gear
29	Check ring	30	handle				

11. ABONDON

9.1 UNMAINTAINABLE

For some reason, the appliance could not be repaired. After ensuring the appliance could not be used again, all the electric connection should be cut off.

9.2 ABONDON

When the appliance could not be repaired, it should be abandoned. Please contact with waste treatment company, and recycle it.

12. PACKING LIST

MEAT MINCER	×1	OPERATION MANUAL	×1
PESTLE	×1	KNIFE	×1