SELF-CONTAINED ICE MAKER

FM-150KE
FM-150KE-N
FM-150KE-50
FM-150KE-50-N
FM-120KE
FM-80KE
FM-80KE-N

INSTRUCTION MANUAL

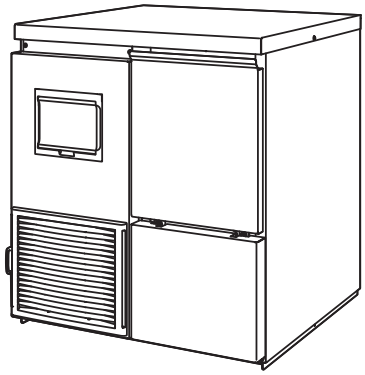

L1F080111 (093014)

ENGLISH

IMPORTANT SAFETY INFORMATION....1
I. INSTALLATION INSTRUCTIONS....2
1. CONSTRUCTION....2
2. ACCESSORIES....2
3. UNPACKING....2
4. LOCATION....3
5. INSTALLATION....3
6. ELECTRICAL CONNECTIONS....3
7. WATER SUPPLY AND DRAIN CONNECTIONS....4
II. OPERATING INSTRUCTIONS....5
1. START UP....5
2. SHUT DOWN....5
3. PREPARING THE ICEMAKER FOR LONG STORAGE....6
III. MAINTENANCE....6
1. CLEANING....6
2. INSPECTION AND MAINTENANCE....7
3. BEFORE CALLING FOR SERVICE....8
4. DISPOSAL....8
5. WARRANTY....9
SPECIFICATIONS....9

IMPORTANT SAFETY INFORMATION

Throughout this manual, notices appear to bring your attention to situations which could result in death, serious injury, or damage to the unit.

⚠WARNING	Indicates a hazardous situation which, if not avoided, could result in death or serious injury.
⚠CAUTION	Indicates a hazardous situation which, if not avoided, could result in minor or moderate injury.
NOTICE	Indicates a hazardous situation which, if not avoided, could result in damage to the unit.
⚠HYGIENE	Indicates important precautions for hygiene and food safety.
IMPORTANT	Indicates important information about the use and care of the unit.

IMPORTANT
This booklet is an integral and essential part of the product and should be kept and preserved by the user.
Please read carefully the guidelines and warnings contained herein as they are intended to provide the installer/user with essential information for the proper installation and the continued safe use and maintenance of the product.
Please preserve this booklet for any further consultation that may be necessary.

⚠WARNING
This is a commercial icemaker, and should be destined only to be used for the purpose for which it has been expressly designed. Any other use should be considered improper and therefore dangerous. The manufacturer will not be held liable or responsible for any damage caused by improper, incorrect and unreasonable use.
The installation, and relocation if necessary, must be carried out by qualified personnel, in accordance with current regulations, according to the manufacturer's instructions.
Keep ventilation openings, in the appliance enclosure or in the built-in structure, clear of obstruction.
The use of any electrical appliance involves the observance of some fundamental rules. In particular: * Instances of high humidity and moisture increase the risk of electrical short circuits and potential electrical shocks. If in doubt, disconnect the icemaker. * Do not damage the power cord or pull it in order to disconnect the icemaker from the electrical supply network. * Do not touch the electrical parts or operate the switches with damp hands. * This appliance can be used by children aged from 8 years and above and persons with reduced physical, sensory or mental capabilities, or lack of experience and knowledge if they have been given supervision or instruction concerning use of the appliance in a safe way and understand the hazards involved. * Children shall not play with the appliance. * Cleaning and user maintenance shall not be made by children without supervision. * Do not attempt to modify the icemaker. Only qualified personnel may disassemble or repair the appliance.

ENGLISH

I. INSTALLATION INSTRUCTIONS

1. CONSTRUCTION

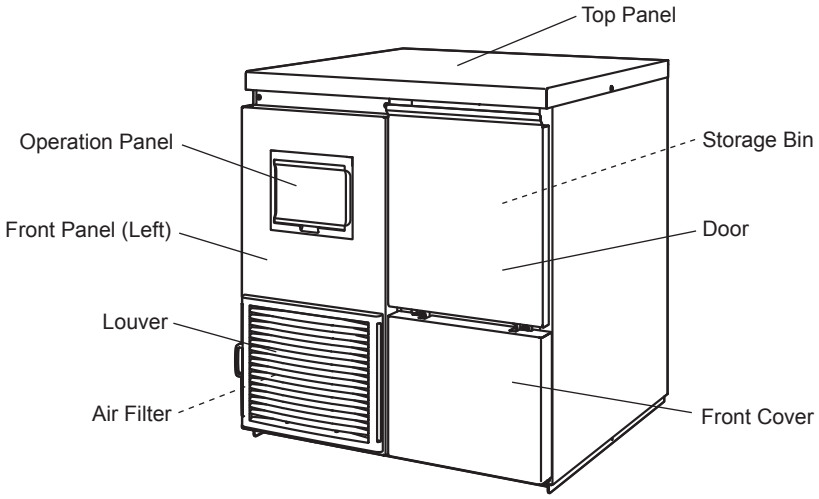

2. ACCESSORIES

CD	1
Scoop	1
Power Supply Cord	1
Adjustable Leg	4
Connector Cover	1
Braided SS Inlet Hose	1
Outlet Hose	1
Dual Check Valve	1

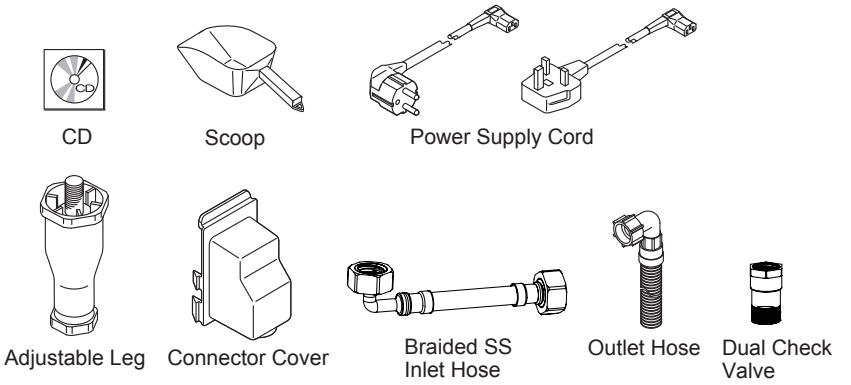

3. UNPACKING

⚠WARNING
Children should not be allowed in reach of the packaging elements (plastic bags and expanded polystyrene) as they are potential sources of danger.

⚠CAUTION
Do not lift or manoeuvre the carton by using the shipping bands.
When moving the unit by hand, remove the panels and hold the unit frame.
Always wear protective gloves when carrying the unit.
When handling the carton or the unpacked unit, work in pair to prevent injury.

NOTICE
Remove shipping carton, tape(s) and packing. If packing material is left in the icemaker, it will not work properly.

1) After removing the packaging, make sure that the icemaker and the storage bin are in good condition. If in doubt, please do not use the icemaker but refer to professionally qualified personnel.

2) Remove the shipping tape holding the door and front panel (left).

3) Open the door and remove the package of accessories. Check the contents according to “2. ACCESSORIES”.

4) Remove the front panel (left) and top panel.

5) Remove the protective plastic film from the exterior. If the icemaker is exposed to the sun or to heat, remove the film after the icemaker cools.

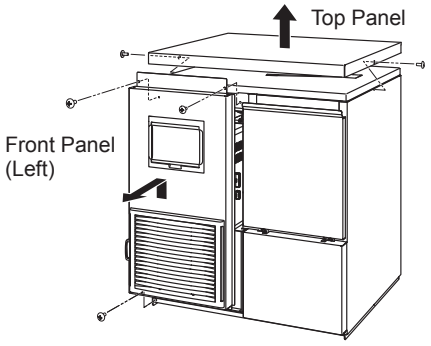

Top Panel: Remove the screws and lift off.
Front Panel (Left): Remove the screws. Lift up and pull toward you.

4. LOCATION

⚠WARNING
This icemaker is not intended for outdoor use.
The icemaker should not be located next to ovens, grills or other high heat producing equipment.
This appliance is not suitable for installation in an area where a water jet could be used.

⚠CAUTION
The location should provide a firm and level foundation for the icemaker.

NOTICE
Do not place anything on top of the icemaker or in front of the louver.

IMPORTANT
Normal operating ambient temperature should be within 5°C to 40°C. Water connection is cold water only. Operation of the icemaker, for extended periods, outside of these normal temperature ranges may affect production capacity.
Allow the clearance specified below for proper air circulation and ease of maintenance and/or service should they be required.
In some high humidity environments, condensation may form inside the machine and drip onto the floor. Do not install where the floor can be affected by water.

Top View

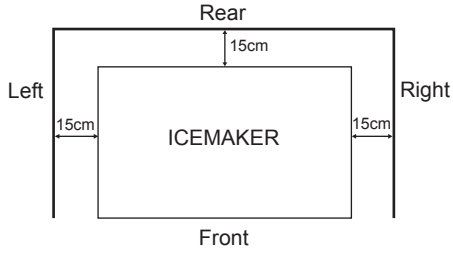

Side View

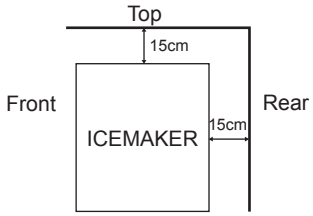

5. INSTALLATION

⚠CAUTION
Incorrect installation can cause harm to people, animals or other items, for which the manufacturer cannot be held responsible.

1) Position the icemaker in the selected permanent site.

2) Level the icemaker in both the left-to-right and front-to-rear directions by adjusting the legs.

6. ELECTRICAL CONNECTIONS

⚠WARNING
THIS APPLIANCE MUST BE EARTHED Electrical connection must be made in accordance with the appropriate local codes and regulations. The icemaker is to be connected to a residual-current device protected, earthed wall socket via the supplied flexible supply cord.
Disconnect the main power supply before any maintenance, repairs or cleaning is undertaken.

* It is recommended that these appliances are connected to a separate 240VAC supply, protected by an appropriate circuit breaker and Residual Current Device. Check the nameplate on the icemaker for the supply requirements.

* The main control box fuse is rated at 3A and should only be replaced by a qualified service engineer.

* The service of a licensed electrician may be required to ensure the installation is in accordance with the local codes and regulations.

* If the supply cord is damaged, it must be replaced by a replacement cord available from Hoshizaki Parts/Service Centres.

* The wires in the mains lead are coloured in accordance with the following code:
  Green & Yellow = Earth
  Blue = Neutral
  Brown = Live

7. WATER SUPPLY AND DRAIN CONNECTIONS

⚠WARNING
Connect to potable cold water supply only.

* The service of a licensed plumber may be required to ensure the installation is in accordance with the local codes and regulations.

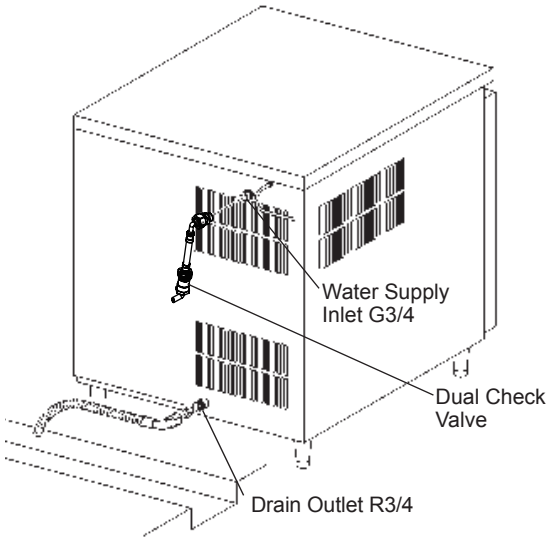

[Connection to the water supply]

* The connections to the mains water supply must be made in accordance with the Plumbing Code of Australia and in accordance with AS / NZS 3500.1 and AS / NZS 3500.2. The dual check valve (backflow prevention) supplied with this unit must be connected between the main supply outlet and water inlet of icemaker.

* Icemaking water must be potable water. Where scaling can be caused by water quality, installation of an external filter or softener is recommended. Contact your local water treatment professional or Hoshizaki service agent.

* Water supply pressure should be minimum 0.05 MPa (0.5 bar) and maximum 0.8 MPa (8 bar). If the pressure exceeds 0.8 MPa (8 bar), use a proper pressure reducing valve. Do NOT throttle back the supply tap.

* The dual check valve must be connected in the icemaker water supply between the main water supply outlet and the straight connection of the braided stainless steel inlet hose as shown.

* Attach the angle end of the braided stainless steel inlet hose to the G3/4” water inlet fitting on the rear of the icemaker.

* Be sure to use the new inlet hose-sets supplied with the appliance. Do not reuse any other inlet hose-set.

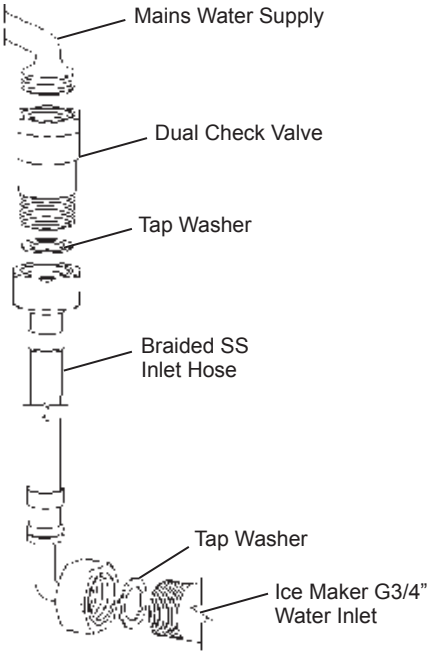

* Ensure rubber tap washers are correctly positioned. Hand tighten the Dual Check Valve and Inlet Hose sufficiently to provide a leak free joint.

[Connection to the drain]

* Hand tighten grey flexible outlet hose (accessory) onto the R3/4 fitting on the rear of the icemaker as indicated, ensuring rubber washer is correctly positioned to obtain a leak free joint. The hose can be cut to length as necessary to suit position of main drain.

* Drain lines should not be installed directly to the sewer system. A vertical air gap of a minimum of 5 cm should be between the end of the drain hoses from the icemaker and the floor drain.

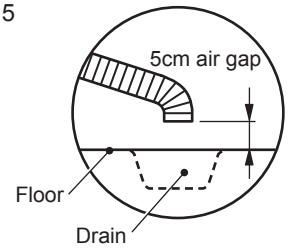

* To prevent a backflow into the storage bin, the outlet hose must be laid as shown.

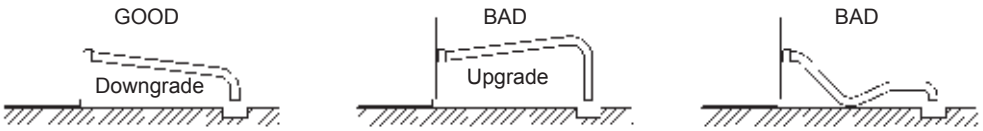

II. OPERATING INSTRUCTIONS

⚠CAUTION

Do not step into the storage bin, or put your hands into the machine compartment inside the storage bin. Children can get trapped inside, or the icemaking mechanism may suddenly move, resulting in injury.

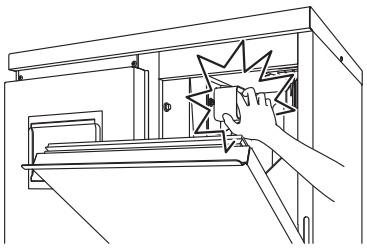

NOTICE

All parts are factory-adjusted. Improper adjustments may result in failure.

If the unit is turned off, wait for at least 3 minutes before restarting the icemaker to prevent damage to the compressor.

⚠HYGIENE

This icemaker is designed to produce edible ice. To keep the icemaker hygienic:
* Wash your hands before removing ice. Use the plastic scoop provided (accessory).
* The storage bin is for ice use only. Do not store anything else in the bin nor use other electrical appliances in the bin.
* Clean the storage bin before use (see “III. 1. CLEANING”).
* Keep the scoop clean. Clean it by using a neutral cleaner and rinse thoroughly.
* Close the door after removing ice to prevent entrance of dirt, dust or insects into the storage bin.

1. START UP

The installer will normally commission the icemaker to start the automatic icemaking process. To ensure continuous operation, make sure that:

* The water supply tap is on, and
* The icemaker is connected to the power supply.

To start the icemaking process, check the position of the operation switch on the operation panel:

“OFF” position - Move it to the “ON” position.
“ON” position - Press the ice button.

Operation Panel

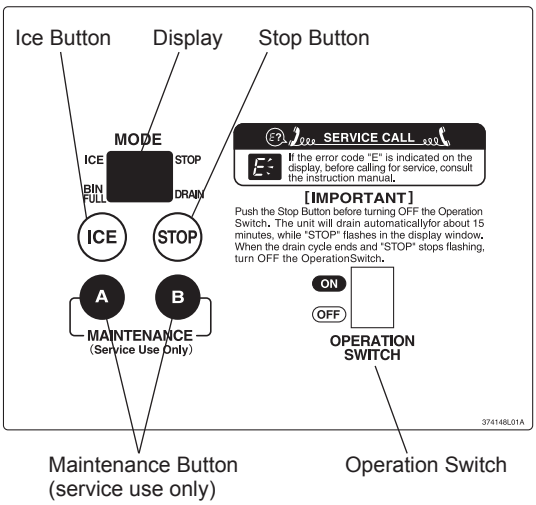

2. SHUT DOWN

Push the stop button on the operation panel. The display will blink in the “STOP” mode for 15 minutes during the drain control operation and will start to illuminate constantly at the end of drain control.

3. PREPARING THE ICEMAKER FOR LONG STORAGE

NOTICE
This icemaker will not work at subfreezing temperatures. To prevent damage to the water supply line, drain the icemaker when air temperature is below zero.

⚠HYGIENE
When shutting down the icemaker for two or more days, drain the icemaker to prevent contamination in the water circuit.

1) Follow the instructions in “2. SHUT DOWN”.

2) Move the operation switch to the “OFF” position.

3) Close the water supply tap.

4) Remove the inlet hose from the water supply tap, and drain the hose.

5) Disconnect the power supply.

6) Remove all ice from the storage bin, and clean the bin.

7) Ask for draining of the icemaker by professional qualified personnel.

8) To restart the icemaker, follow the instructions in “1. START UP”.

III. MAINTENANCE

1. CLEANING

⚠WARNING
Before carrying out any cleaning or maintenance operations, unplug the icemaker from the electrical supply network.
This appliance must not be cleaned by use of a water jet.

⚠CAUTION
When using a neutral cleaner or sodium hypochlorite, thoroughly read and understand the instructions provided to prevent potential health problems.

NOTICE
Ask a trained service person to clean and sanitize the icemaker water system at least twice a year and to check and clean the condenser at least once a year.
To prevent possible damage, do not clean the plastic parts with water above 40°C or in a dishwasher.

[a] Machine and Bin Exterior

Wipe the exterior at least once per week with a clean, soft cloth. Use a damp cloth containing a neutral cleaner to wipe off grease or dirt.

[b] Scoop and Storage Bin Handle Cleaning/Sanitisation (Daily)

1) Either mix 1 litre of water with 4 ml of 5.25% sodium hypochlorite solution in a suitable container, or the recommended Hoshizaki sanitiser as directed.

2) Soak the scoop in the solution for more than 3 minutes. Rinse thoroughly, and shake to remove surplus liquid.

   Note: Using a cloth to dry may re-contaminate.

3) Use a neutral cleaner to wash the storage bin handle. Rinse thoroughly.

4) Soak a clean cloth with the sanitising solution, and wipe the handle. Use fresh water and a clean cloth to rinse/dry.

[c] Storage Bin Interior Cleaning/Sanitisation (Weekly)

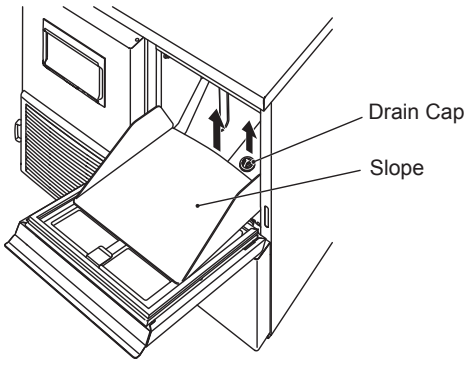

1) Open the storage bin door, and remove all ice.

2) Slightly warp the slope to release it from the left and right shafts.

3) Remove the drain cap located in the base of the storage bin.

4) Wash the bin liner, slope and drain cap with a neutral non-abrasive cleaner. Rinse thoroughly.

   Note: Take care not to damage the bin control actuator at the top of the bin.

5) Either mix 5 litres of water with 18 ml of 5.25% sodium hypochlorite solution in a suitable container, or the recommended Hoshizaki sanitiser as directed.

6) Soak a clean sponge or cloth with the solution, and wipe the bin liner surfaces, slope and drain cap.

7) Refit the slope and drain cap.

8) Wipe the surface of the bin door with the solution. Close the bin door.

9) The remaining solution can be used to sanitise utensils.

Note: Do not wipe dry or rinse after sanitising, but allow to air dry.

[d] Storage Bin Door

Clean the storage bin door at least once a week, using a neutral non-abrasive cleaner. Rinse thoroughly after cleaning and sanitise as required.

[e] Air Filter

Plastic mesh air filters remove dirt or dust from the air, and keep the condenser from getting clogged. If the filters get clogged, the icemaker's performance will be reduced. Remove and clean the air filter(s) at least twice per month:

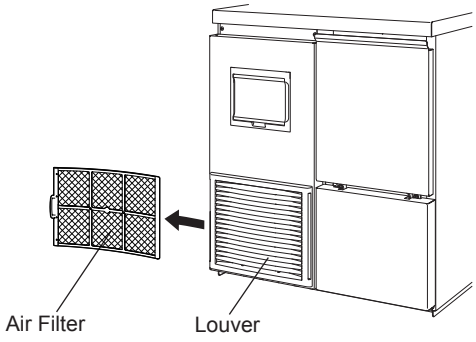

1) Slide the air filter off the louver.

2) Clean the air filter by using a vacuum cleaner. When severely clogged, use warm water and a neutral cleaner to wash the air filter.

3) Rinse and dry the air filter thoroughly.

NOTICE
After cleaning, be sure to place the air filter back in position.

2. INSPECTION AND MAINTENANCE

NOTICE
To achieve optimum icemaker performance, the following parts need periodic inspection and maintenance: Extruding head (upper bearing) Housing (lower bearing) Mechanical seal

These parts should be inspected after two years from installation or 10,000 hours of operation, whichever comes first, and once a year afterwards. Replacement of these parts is required if wear exceeds factory recommendations.

Their service life, however, depends on water quality and environment. More frequent inspection and maintenance are recommended in bad or severe water conditions.

Consult with your local Hoshizaki service agent about inspection and maintenance service.

3. BEFORE CALLING FOR SERVICE

⚠WARNING
Do not damage the refrigerant circuit.

[a] Error Code Indication

If the error code “E” is indicated on the display, before calling for service, check the following.

Code	Remedy
E0	Possibility of water leaks. Turn OFF operation switch, and turn it ON again. If error code appears again, call for service.
E1	Low ice production. Turn OFF operation switch, and turn it ON again. If error code appears again, call for service.
E2	Water supply circuit failure. Turn OFF operation switch, and turn it ON again. If error code appears again, call for service.
E3	Gear motor failure. Turn OFF operation switch, and turn it ON again after 10 minutes. If error code appears again, call for service.
E4	Abnormal high side pressure. Clean air filter. Check that icemaker is properly installed according to installation manual. Turn OFF operation switch, and turn it ON again. If error code appears again, call for service.
E5	Electric circuit failure. Turn OFF operation switch, and turn it ON again. If error code appears again, call for service.
E8	Compressor could be overheated. Check that icemaker is properly installed according to installation manual. Turn OFF operation switch, and turn it ON again after 10 minutes. If error code appears again, call for service.
EA	Electric circuit failure. Turn OFF operation switch, and turn it ON again. If error code appears again, call for service.
Eb	Electric circuit failure. Turn OFF operation switch, and turn it ON again. If error code appears again, call for service.
EC	Electric circuit failure. Turn OFF operation switch, and turn it ON again. If error code appears again, call for service.
EE	Gear motor failure. Turn OFF operation switch, and turn it ON again. If error code appears again, call for service.
EF	Supply voltage is too low. Check that voltage is in required range and icemaker is not sharing a single receptacle with other appliances. Turn OFF operation switch, and turn it ON again. If error code appears again, call for service.
EH	Electric circuit failure. Turn OFF operation switch, and turn it ON again. If error code appears again, call for service.
EL	Bin control switch has failed. Turn OFF operation switch, and turn it ON again. If error code appears again, call for service.
En	Electric circuit failure. Turn OFF operation switch, and turn it ON again. If error code appears again, call for service.
EU	Controller board failure. Turn OFF operation switch, and turn it ON again. If error code appears again, call for service.

[b] No Error Code Indication

If the icemaker does not work properly or does not work at all and no error code is indicated on the display, before calling for service, check that:

* The power is supplied to the unit.
* The water is turned on.
* The air filter is clean.

For further assistance or advice, contact your local Hoshizaki service agent.

4. DISPOSAL

Comply with local regulations regarding disposal of this appliance and its refrigerant gas. Before you scrap the appliance, take off the door to prevent children trapped.

Correct disposal of this product:
This marking indicates that this product should not be disposed with other household wastes throughout the EU. To prevent possible harm to the environment or human health from uncontrolled waste disposal, recycle it responsibly to promote the sustainable reuse of material resources. To return your used device, use the return and collection systems or contact the retailer where the product was purchased. They can take this product for environmental safe recycling.



5. WARRANTY

Hoshizaki warrants to the original owner/user that all Hoshizaki branded products shall be free of defects in material and/or workmanship for the duration of the “warranty period”. The warranty shall be effective for two years from the date of installation. Hoshizaki’s liability under the terms of the warranty are limited and shall exclude routine servicing, cleaning, essential maintenance and/or repairs occasioned by misuse and installations not in accordance with Hoshizaki guidelines.

Warranty repairs should be completed by an approved Hoshizaki dealer or service agency using genuine Hoshizaki components.

To obtain full details of your warranty and approved service agency, please contact your dealer/supplier, or the nearest Hoshizaki Service office:

Hoshizaki Lancer
TEL: +61 8 8268 1388
FAX: +61 8 8268 1978

SPECIFICATIONS

Model	FM-150KE	FM-150KE-N	FM-150KE-50
Type	Air-cooled, flake ice	Air-cooled, nugget ice	Air-cooled, flake ice
Power Supply	1 phase 220-240V 50Hz	1 phase 220-240V 50Hz	1 phase 220-240V 50Hz
Electric Consumption	640W	640W	640W
Ice Production per 24h	150kg (ambient 10°C, water 10°C)	140kg (ambient 10°C, water 10°C)	150kg (ambient 10°C, water 10°C)
Dimensions	640mm(W) x 600mm(D) x 800(798-833)mm(H)	640mm(W) x 600mm(D) x 800(798-833)mm(H)	940mm(W) x 600mm(D) x 800(798-833)mm(H)
Refrigerant	R134a, 220g	R134a, 220g	R134a, 220g
Weight	Net: 71kg (Gross: 82kg)	Net: 71kg (Gross: 82kg)	Net: 81kg (Gross: 94kg)
Ambient Temp	5 - 40°C	5 - 40°C	5 - 40°C
Water Supply Temp	5 - 35°C	5 - 35°C	5 - 35°C
Water Supply Pressure	0.05 - 0.8 MPa (0.5 - 8 bar)	0.05 - 0.8 MPa (0.5 - 8 bar)	0.05 - 0.8 MPa (0.5 - 8 bar)
Voltage Range	Rated voltage ± 10%	Rated voltage ± 10%	Rated voltage ± 10%

Model	FM-150KE-50-N	FM-120KE	FM-80KE
Type	Air-cooled, nugget ice	Air-cooled, flake ice	Air-cooled, flake ice
Power Supply	1 phase 220-240V 50Hz	1 phase 220V 60Hz	1 phase 220-240V 50Hz
Electric Consumption	640W	550W	300W
Ice Production per 24h	150kg (ambient 10°C, water 10°C)	145kg (ambient 10°C, water 10°C)	85kg (ambient 10°C, water 10°C)
Dimensions	940mm(W) x 600mm(D) x 800(798-833)mm(H)	640mm(W) x 600mm(D) x 800(798-833)mm(H)	640mm(W) x 600mm(D) x 800(798-833)mm(H)
Refrigerant	R134a, 220g	R134a, 220g	R134a, 150g
Weight	Net: 81kg (Gross: 94kg)	Net: 71kg (Gross: 82kg)	Net: 65kg (Gross: 75kg)
Ambient Temp	5 - 40°C	5 - 40°C	5 - 40°C
Water Supply Temp	5 - 35°C	5 - 35°C	5 - 35°C
Water Supply Pressure	0.05 - 0.8 MPa (0.5 - 8 bar)	0.05 - 0.8 MPa (0.5 - 8 bar)	0.05 - 0.8 MPa (0.5 - 8 bar)
Voltage Range	Rated voltage ± 10%	Rated voltage ± 10%	Rated voltage ± 10%

Model	FM-80KE-N
Type	Air-cooled, nugget ice
Power Supply	1 phase 220-240V 50Hz
Electric Consumption	300W
Ice Production per 24h	85kg (ambient 10°C, water 10°C)
Dimensions	640mm(W) x 600mm(D) x 800(798-833)mm(H)
Refrigerant	R134a, 150g
Weight	Net: 65kg (Gross: 75kg)
Ambient Temp	5 - 40°C
Water Supply Temp	5 - 35°C
Water Supply Pressure	0.05 - 0.8 MPa (0.5 - 8 bar)
Voltage Range	Rated voltage ± 10%

This product includes a hermetically sealed refrigeration system that contains fluorinated greenhouse gases covered by the Kyoto Protocol:

FM-150KE(-N)	**R134a / GWP 1430 / 0.22kg**	**FM-120KE**	**R134a / GWP 1430 / 0.22kg**
CM-140KE	**R134a / GWP 1430 / 0.22kg**	**CM-110KE-50**	**R134a / GWP 1430 / 0.22kg**
FM-150KE-50(-N)	**R134a / GWP 1430 / 0.22kg**	**FM-80KE(-N)**	**R134a / GWP 1430 / 0.15kg**

This product is insulated with foam blown with fluorinated greenhouse gases.

This product meets the essential health and safety requirements demanded by the following regulations:

EMC Directive (2004/108/EC)
Low Voltage Directive (2006/95/EC)
RoHS Directive (2011/65/EU)
Food Contact Materials Regulation (EC 1935/2004)

Manufacturer: Hoshizaki Europe Ltd.
Telford 70 Stafford Park 7, Telford, Shropshire TF3 3BQ England