OFFICE LINE

USER MANUAL



UM_EN

Date: 150525_02

EXPOBAR®

CONTENT 2
SYMBOL DESCRIPTION 4
Hazard intensity levels 4
GENERAL 5
Introduction 5
General instructions 5
Warnings 5
Precautions 6
Intended use 6
TECHNICAL SPECIFICATIONS 7
Leva 7
Accessories 7
Control/Pulser & Control/Pulser with grinder 8
Accessories 8
OVERVIEW OF COMPONENTS 9
Leva 9
Control/Pulser 10
Control/Pulser with grinder 11
DIMENSION SKETCH 12
Leva 12
Control/Pulser 12
Control/Pulser with grinder 13
TRANSPORT 14
Packaging 14
Delivery inspection 14
INSTALLATION 14
Positioning 14
Electrical installation 15
Electrical connection types 15
Water connection 16
Pressure and temperature 16
Hydraulic connection types 16
Filling the water tank 17
Connecting to the water mains 18
Starting the machine 18
The portafilter set 19
Inserting the portafilter in the group 19

OPERATION 20
Espresso brewing 20
Steaming and frothing milk 21

ESPRESSO MACHINE WITH BUILT-IN GRINDER 22
Hot water dispensing 22
Before using the coffee grinder 22
Adjusting the grinder coarseness 23
Dispensing a ground coffee dose 23

CLEANING AND MAINTENANCE 24
Recharging the water softener 24
Coffee machine cleaning 25
Daily cleaning 25
Weekly cleaning 25
Cleaning the brewing group and portafilter 26
Cleaning the gasket and shower plate 27
Additional handling of the machine 28

STORAGE AND DISPOSAL OF MACHINE 28
Storing the machine 28
Disposal of the machine 28

PROGRAMMING 29
Touchpad 29
Dosage programming of the drink buttons (Control models only) 29
Normal mode 30
Turning the thermostat and group boiler off/on 30
Adjusting the group boiler temperature 30
Reset temperature to factory default 31
Thermostat alarms 31

TROUBLESHOOTING 32
Quick Troubleshooting Guide 32

Hazard intensity levels

There are four different levels of notification intensity within this manual, as identified by signal words DANGER, WARNING, IMPORTANT, and NOTE. The level of risk and importance of the notification is determined by the following definitions. Always observe the warnings to ensure safety and prevent potential injury and product damage.



Important:

Alerts against unsafe practices. Observe *Important* notifications to ensure food safety, prevent possible minor personal injury, or damage to the machine.



WARNING:

Indicates a potentially hazardous situation which, if the *WARNING* is ignored, could result in serious injury or even death.



DANGER:

INDICATES A IMMINENTLY HAZARDOUS SITUATION WHICH, IF NOT AVOIDED, WILL LIKELY RESULT IN SERIOUS INJURY AND EVEN DEATH.



Note:

Gives additional information which may be helpful during the operation, routine maintenance, and cleaning of the machine.

Introduction

Thank you for choosing an OFFICE LINE espresso machine from EXPOBAR.
We hope you enjoy it !

- Read this user manual carefully before starting to use the machine.
- This manual contains important instructions regarding safe intended use of the machine.
- Do not discard this manual, it will be useful for future reference. If damaged or lost, request a copy from the manufacturer.

General instructions

- Machine installation and certain maintenance operations should only be performed by qualified service personnel.
- All safety instructions and warnings contained in this manual should be observed to ensure safe installation, use and maintenance.
- Do not attempt to open or repair the machine or access the interior. Repair should be performed by an authorised workshop, by a service centre, or by qualified service staff.
- Do not remove operational or protective parts requiring use of tools for removal.
- Purchasers are liable for ensuring that users have been trained to operate the machine and have been informed of the potential risks involved.
- The installer will be held liable for all non-authorised modification of the machine.
- Non-authorised alteration or modification of the machine will exempt the manufacturer of all liability for damages and will invalidate the warranty.
- This manual refers to the machine as at the time of sale. The commercial availability of subsequent versions featuring modifications, upgrades or adaptations does not oblige the manufacturer to apply the same to this machine, nor does it oblige it to update the documentation supplied.
- The manufacturer reserves the right to withdraw currently available manuals whenever it considers appropriate and reasonable.

Warnings

Note: The manufacturer is not liable for damage to persons or property resulting from failure to follow the instructions and warnings listed below when installing and using this machine.

- Install the machine in a horizontal position and away from heat sources and flammable objects.
- This machine should only be installed on a water-resistant work surface that is capable of adequately supporting the machine's weight.
- Place the machine in a location accessible only to personnel trained to operate it.
- Keep all hazardous packaging materials, such as plastic bags, styrofoam, and staples, out of reach of children.
- Plug the machine into a properly installed, earth grounded electrical outlet with line voltage that matches the specifications for the machine.
- Ensure that the power supply voltage does not fluctuate by more than 6%.
- Position the power cable so that users cannot trip over it. Keep the power cable away from sharp edges and heat sources.
- Children should never be allowed to play with the machine.
- This appliance is not suitable for installation in an area where a pressure washer may be used.
- Do not use the machine outdoors, where it would be exposed to severe weather or extreme temperatures..
- If the power cable is damaged, it may only be replaced by the manufacturer or its approved service technician.
- Do not remove or disable any of the mechanical, electrical, or thermal protection safety equipment.

- In case of emergency, (e.g., the machine catches fire or becomes unusually hot or noisy), disconnect the power immediately and turn off the water supply.
- If the machine is not going to be used for an extended period of time, disconnect the power. When disconnecting the power, pull the plug rather than the cable.
- When packed for storage, store the machine in a dry place with an ambient temperature above 5°C. Boxes may be stacked up to three units high of the same model. Do not place other heavy items on top of the box.
- If the machine is likely to be exposed to temperatures below 0°C during handling and transport, make sure that service personnel empty the boiler and water system. (The machine's boiler and water system is empty when delivered from the factory.)
- To ensure fault-free machine operation, only use manufacturer-approved replacement parts and accessories.

Precautions

- Before performing maintenance and/or moving the machine, disconnect the machine from the power supply and wait for it to cool down.
- Do not place any liquids on the machine.
- This appliance must not be cleaned with a pressure washer.
- Never immerse the machine, plug or power cable in water, as there is a risk of electric shock.
- Do not touch the machine's hot surfaces or dispensing equipment.
- Do not touch the machine if your hands or feet are wet.
- Do not operate the machine if any part except the dispensing equipment is wet.
- Place the machine out of reach of children.
- This appliance can be used by children from age 8 and above and persons with reduced physical, sensory, or mental capabilities or lack of experience and knowledge if they have been given supervision or instruction concerning use of the appliance in a safe way and understand the hazards involved.
- Children shall not play with the appliance.
- Cleaning and user maintenance shall not be made by children without supervision.
- Do not use the machine if the power cable or plug is damaged, or the machine has been dropped. Contact a service technician for repairs or to ensure that it is safe for use.
- Do not block the vents with rags or other objects.
- Do not insert foreign objects into the vents.
- Check the drain regularly to make sure that waste water is emptying properly.

Intended use

- The coffee machine has been designed and manufactured to make espresso coffee and other hot drinks (e.g., steaming and frothing milk). Do not use it for any other purpose.
- The machine is intended to be used by trained personnel for preparing foodstuffs.
- This machine is not intended for use in industrial kitchens, domestic kitchens, or similar locations.
- The manufacturer will not be held liable for damage to persons or property due to incorrect, improper or negligent use by nonprofessional personnel.
- To ensure optimal performance, install the machine in a location where these parameters will not be exceeded:
  - Maximum permissible inlet water pressure: 600 KPa (6 Bar)
  - Minimum permissible inlet water pressure: 200 KPa (2 Bar)
  - Maximum inlet water temperature: 40°C
  - Ambient temp. maintained between: +10°C / (min.) and +40°C (max.).

Leva

SPECIFICATIONS	MODEL	
	Leva 1 boiler	Leva 2 boilers
Steam wand	1 unit	
Hot water outlet	1 unit	
Group	1 unit	
Built-in grinder	No	
Temperature control	Pressurestat regulated	Pressurestat & PID regulator
Width, height, depth	16.9x10.2x18.1 in. / 430x260x460 mm	
Boiler volume (L)	1.5	1.5 + 1.5
Water tank volume (L)	2.75	
Power supply options	120V~ 1200W 60Hz	
	240V~ 1950W 60Hz	
Water connection	Female 3/8" thread	
Machine weight	55.8 lbs / 25.3 kg	62.4 lbs / 28.3 kg
Steam boiler operating press	11.6-18.8psi / 0.8-1.3 bar	
Ambient noise	< 70 dB	

Accessories

MODEL	2-spout portafilter	Filter basket	Coffee spoon	Inlet hose	Cleaning membrane	Drain tube	Tamper	Water softener cartrge.
		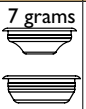 7 grams 14 grams		 21 in. / 55 cm		 59 in. / 150 cm	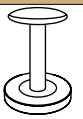	
Leva - Leva 2 boiler	1 unit	1 unit each	1 unit	1 unit (mains con-nection models only)	1 unit	1 unit (mains con-nection models only)	1 unit	2 units

Control/Pulser & Control/Pulser with grinder

SPECIFICATIONS	MODEL	
	Control & Pulser 1 boiler	Control & Pulser 1 boiler w/ grinder
Steam wand	1 unit	1 unit
Hot water outlet	1 unit	1 unit
Group	1 unit	1 unit
Built-in grinder	No	Yes
Temperature control	Pressurestat regulated	Pressurestat regulated
Width, height, depth	21.9x10.2x18.1 in. 555x260x460 mm	26.8x16.5x18.1 in. 680x420x460 mm
Boiler volume (L)	1.5	1.5
Water tank volume (L)	2.75	2.75
Power supply options	120V~ 1200W 60Hz	120V~ 1310W 60Hz
	240V~ 1950W 60Hz	240V~ 2050W 60Hz
Water connection	Female 3/8" thread	Female 3/8" thread
Machine weight	37.5 lbs / 17.0 kg	59.5 lbs / 27 kg
Steam boiler operating press	Between 11.6 and 18.9 psi / 0.8 and 1.3 bar	
Ambient noise	< 70 db	

Accessories

MODEL	2-spout portafilter	Filter basket	Coffee spoon	Inlet hose	Cleaning membrane	Drain tube	Tamper	Water Softener Cartrge.
		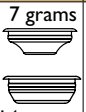					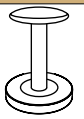	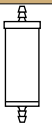
Control & Pulser - Control & Pulser w/ Grinder	1 unit	2 units	1 unit	1 unit (mains connection models only)	1 unit	1 unit (grinder models only)	1 unit	2 units

Leva

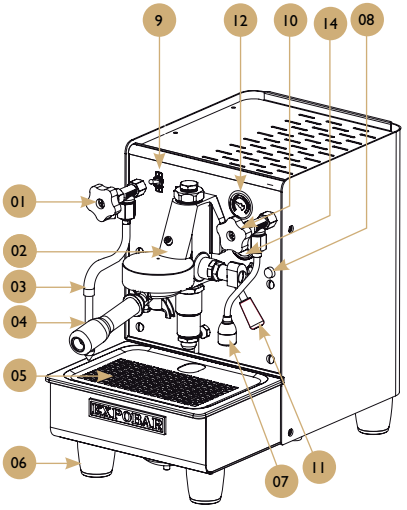

Leva

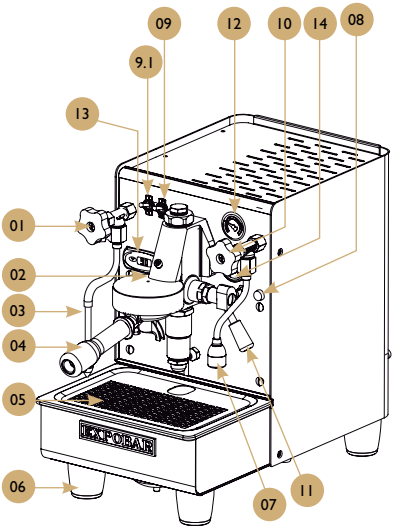

Leva 2 boiler

POS.	Description	POS.	Description
1	Steam tap	9	Main switch
2	Brewing group	9.1	Water-steam boiler switch
3	Steam wand	10	Hot water tap
4	Porta filter	11	Brewing lever
5	Removable drip tray	12	Steam manometer
6	Adjustable leg	13	Temperature control display
7	Hot water outlet	14	Brew manometer
8	Heating element light		

Control/Pulser

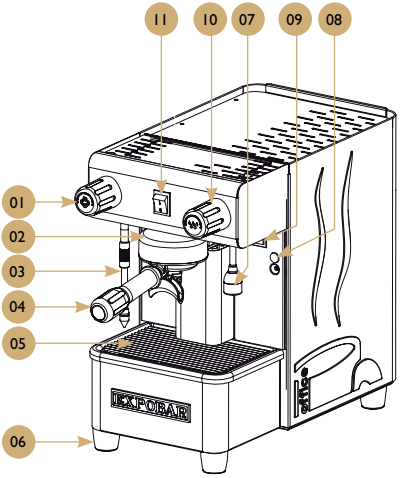

Pulser

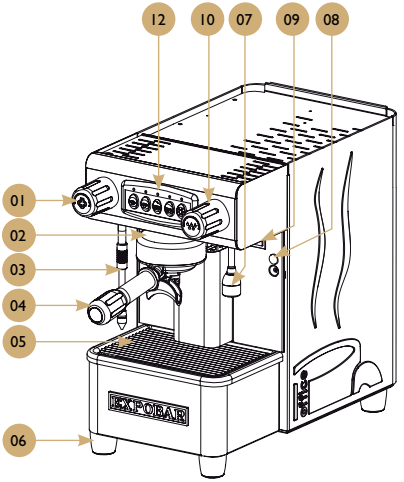

Control

POS.	Description	POS.	Description
1	Steam tap	7	Hot water outlet
2	Brewing group	8	Heating element light
3	Steam wand	9	Main switch
4	Porta filter	10	Hot water tap
5	Removable drip tray	11	Brewing switch
6	Adjustable leg	12	Electronic control panel

Control/Pulser with grinder

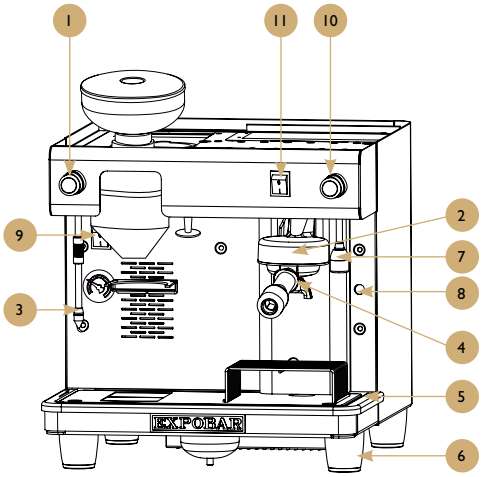

Pulser with grinder

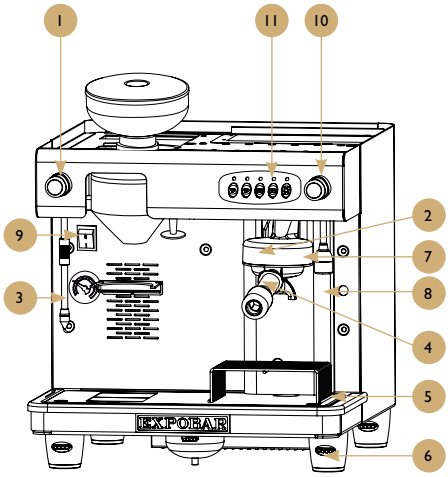

Control with grinder

POS.	Description	POS.	Description
1	Steam tap	7	Hot water outlet
2	Brewing group	8	Heating element light
3	Steam wand	9	Main switch
4	Porta filter	10	Hot water tap
5	Removable drip tray	11	Brewing switch
6	Adjustable leg	12	Electronic control panel

Leva

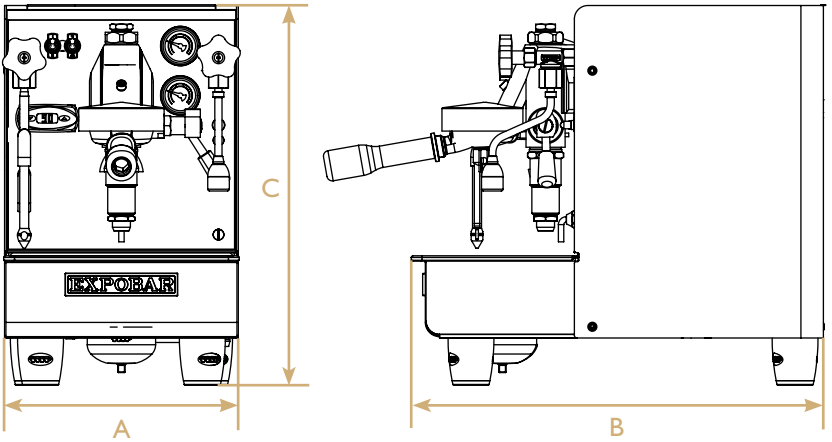

Model	A	B	C
Leva & Leva 2 boiler	260 mm	460 mm	430 mm

Control/Pulser

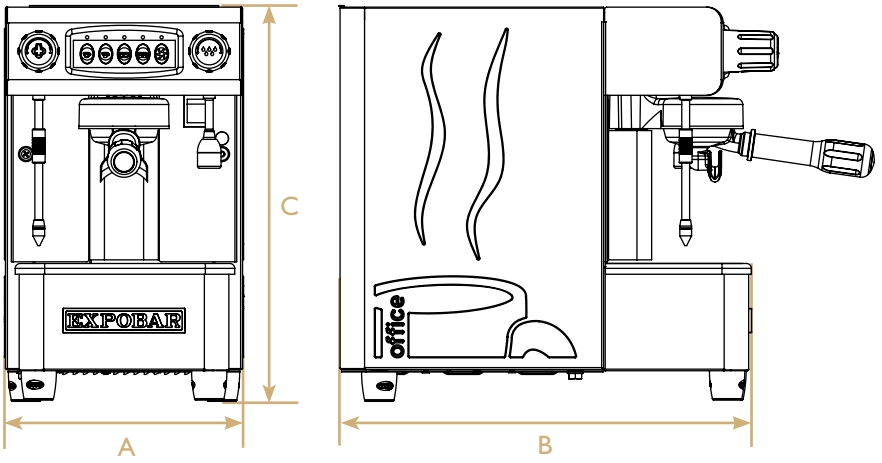

Model	A	B	C
Control & Pulser	250 mm	420 mm	410 mm

Control/Pulser with grinder

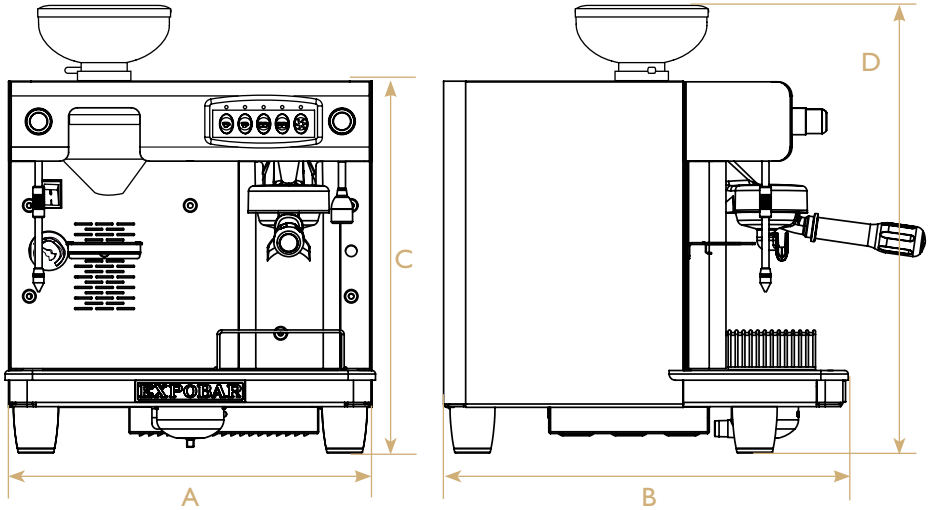

Model	A	B	C	D
Control with grinder	420 mm	460 mm	560 mm	680 mm
Pulser with grinder	420 mm	460 mm	560 mm	680 mm

Packaging

- The machine is shipped in a custom-designed carton which utilizes model-specific polystyrene cushions to protect it from damage.
- The machine's carton features standardized handling symbols to explain proper shipping and storage methods.
- The machine must remain in a horizontal position during the transport. Do not store or handle the machine except on its feet.
- During transport protect the carton and machine from impact drops, crushing, shocks, moisture and exposure to extreme temperature.

Delivery inspection

- Upon receipt and delivery ensure that the machine is in the exact condition described in the enclosed documentation, and that all accessories are included. Missing items should be reported to the manufacturer or dealer immediately.
- Damage caused during transport should be reported to the shipping agent and the machine's distributor immediately.
- Packaging materials are potentially dangerous and should be kept away from children.
- The carton and all packing materials are recyclable and should be returned to a recycling center for disposal.

INSTALLATION

Positioning

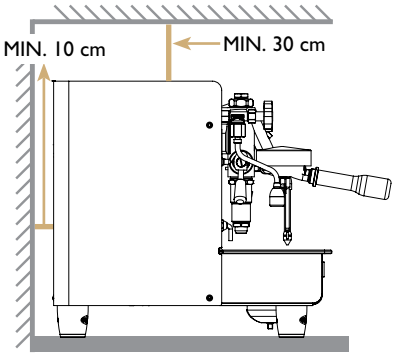

- Install the machine on a level, sturdy, and water-resistant surface approximately 110cm above floor level for ease of access and usage.
- Adjust the feet to ensure that it dispenses coffee evenly to all cups.
- Ensure enough free space is available above (>30cm) and behind (>10cm) the machine to ensure easy cleaning and maintenance and adequate ventilation.
- Do not install the machine if it is wet or damp. Allow it to dry completely and ask a service technician to ensure that none of the electrical components have been affected.

Note:
Leave an air gap of approximately 30cm above the machine and 10cm behind it to ensure adequate ventilation.

Electrical installation

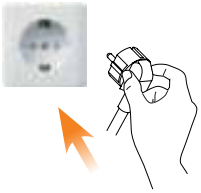

The machine should only be connected to the power supply by qualified personnel. The following safety instructions should be obeyed at all times:

- Ensure that the electrical requirements stated on the TECHNICAL SPECIFICATIONS (pages 7 - 8) match the specifications of the power supply at the outlet.
- Ensure that the domestic electrical supply where the machine is being installed is rated for and able to provide the power required by the machine. Insufficient power supply, wiring, grounding, or insulation can result in overheating and possibility of fire.
- The coffee machine must be connected to an earth grounded electrical outlet that complies with the regulations in force in the country of installation.
- Ensure that a circuit breaker engineered for the power consumption of the machine is installed to protect the domestic electrical supply, as specified on the ratings plate located under the drip tray.
- Do not connect the machine to the domestic power supply via extension cords, plug adapters, or shared outlets.

The manufacturer will not be held liable for damage to persons, animals or property resulting from incorrect installation of the coffee machine.

DANGER!

If the power cable or plug is damaged, it must be replaced by the manufacturer, distributor, or its approved service technician in order to avoid **RISK OF SERIOUS INJURY OR DEATH!**

Electrical connection types

- Connect the machine per the instructions and voltage information shown on the ratings plate.

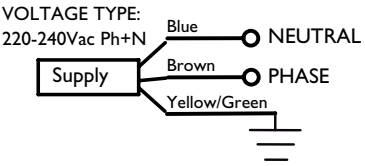

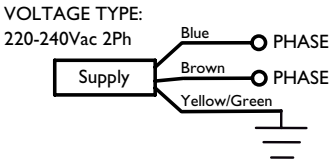

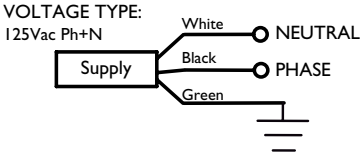

Water connection

- Connecting the machine to the domestic water supply must be performed by a qualified person.
- Purge at least 20 liters of water from the domestic water supply before connecting the machine to it to flush out any debris that may be in the plumbing system that would otherwise accumulate inside the boilers.
- The domestic plumbing system should be fitted with a brass 3/8" male pipe fitting and an in-line shut-off valve. Connect the 180cm water inlet hose included with the machine to the domestic water supply and tighten the line fittings with a wrench.
- Only use safe drinking water with a hardness rating between 5°fH and 8°fH (French hardness degrees) or 20 to 32 ppm (parts per million as calcium). If the hardness value is below this limit, corrosion of hydraulic components is likely. If the value is higher, lime-scaling inside the boiler will occur. In both cases, the proper function of the machine and quality and taste of the coffee will be negatively affected.
- If necessary, connect the machine to a water softener to reduce water hardness using the flexible 55cm hose included in the accessory box.
- Connect one end of the corrugated drain tube to the drain cup in the machine, connect the other end to the plumbing drainage system in the installation area.

Important:

- Only use the hoses supplied with the machine. Never reuse damaged hoses.
- Ensure that the drainage tube is not twisted and that it is below the level of the drain cup.

Pressure and temperature

- Boiler pressure is directly related to water temperature (fig. 01).
- Machines fitted with a pressure gauge will display the boiler pressure, while machines is fitted with a digital display it will indicate water temperature.

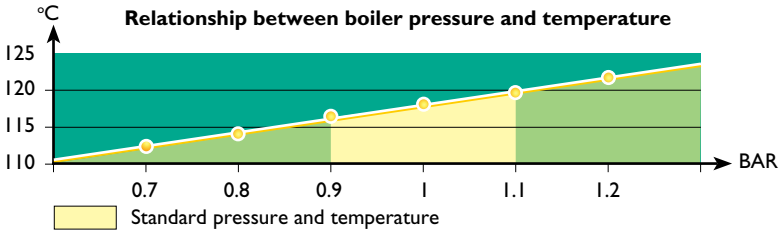

Fig. 01

Hydraulic connection types

This machine is offered with three options for hydraulic connection:

- Machine intended for water mains connection.
- Machine with internal water tank.
- Machine with internal water tank and water mains connection.

Check the machine ratings plate to confirm which arrangement the specific machine is equipped as.

Filling the water tank

DANGER!

Avoid spills inside the machine. If spills occur, turn the machine off and unplug the power supply until the machine is completely dry to avoid RISK OF SHOCKS.

Note:
Always use fresh water with a pH water with a hardness rating between 5°fH and 8°fH (French hardness degrees) or 20 to 32 ppm (parts per million as calcium) to ensure great tasting coffee and to prevent limescaling.

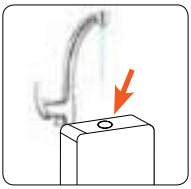

Option 1:

- Remove the top panel/cup warming tray.
- Remove the water inlet tube and water softener unit, then remove the water tank.
- Fill the tank with clean, fresh drinking water (max. volume = 2.75L).
- Replace the water tank in the machine, then replace the softener unit, with the inlet side pointing down.
- Replace the top panel/cup warming tray.
- When the boiler is filled and heated, the machine is ready for use.

Note:
The machine has a microswitch located below the water tank to automatically stop the machine's pump when the tank is empty. Therefore, the water tank should only be removed and refilled when espresso is not being brewed.

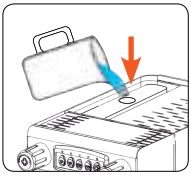

Option 2:

- Remove the top panel/cup warming tray.
- Using a pitcher, carefully fill the tank with clean, fresh drinking water (max. volume = 2.75L). Avoid spills inside the machine.
- Replace the top panel/cup warming tray.
- When the boiler is filled and heated, the machine is ready for use.

Connecting to the water mains

This section applies to models with the optional water mains connection.

- Attach the included 1/2' water inlet hose to the bottom of the machine (elbow end to machine, straight end to mains) and torque both fittings with a wrench.
- Open the water valve located on the bottom of the machine (see images below for positioning).
- When the boiler is filled and heated, it is ready for use.

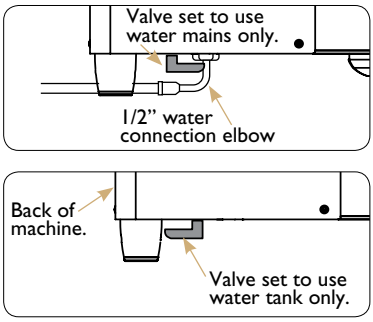

Important:

To prevent limescale build up in the boiler and other components, a water-softening system must be installed in-line ahead of the machine.

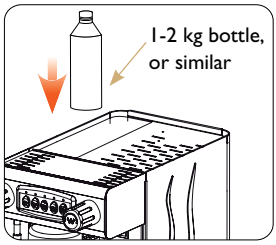

Note:

For models which have both water tank and water mains connection, the water tank must be removed and stored and a 1-2 kg water-proof, heat-resistant object (such as a sealed, filled plastic bottle) must be put in its place to ensure the pump-control microswitch remains on. Failure to weigh down the microswitch will prevent the machine from filling the boiler.

Starting the machine

- Fill the water tank or open the water mains supply valve.
- Turn on the main power switch.
- Press a drink button at the control panel or raise the group lever then wait until water comes out continuously. This ensures that the heat exchanger in the machine is being correctly filled.
- Open the steam tap to release any air trapped in the boiler.
- The red lamp indicates that the boiler is heating. The lamp switches off automatically when the machine reaches operating temperature and is ready to use.

The portafilter set

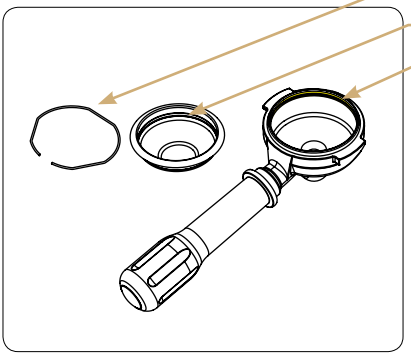

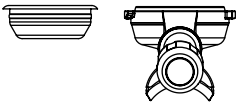

Portafilter & filter basket
for double espresso (14g)

Inserting the portafilter in the group

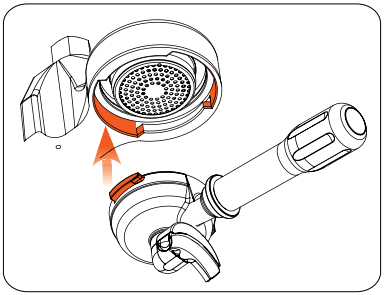

- Align the portafilter's two flanges with the two slots in the group housing.

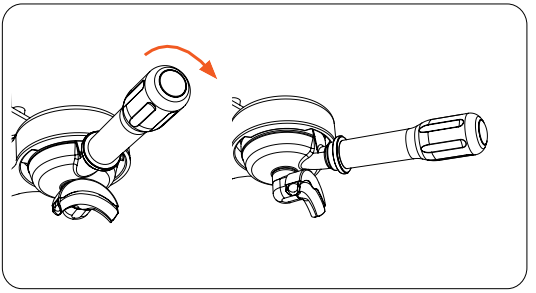

- Insert the portafilter and rotate it counterclockwise until the handle is approximately perpendicular to the face of the coffee machine.

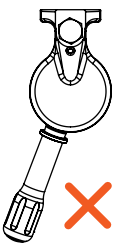

- Portafilter not fully inserted.

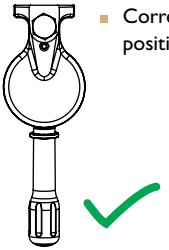

- Correct position.

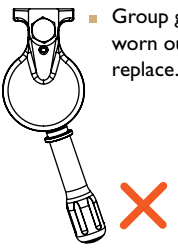

- Group gasket is worn out, please replace.

Espresso brewing

Important:
Always keep the portafilter inserted in the group to keep it warm. This is very important to maintain an optimal temperature to make the best espresso possible.

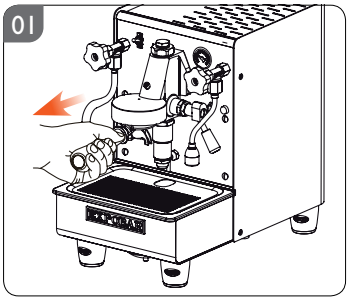

▲ Unlock and remove the portafilter from the group head.

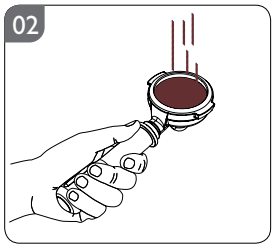

▲ Fill the filter basket of the portafilter with espresso powder (the amount may differ depending of the filter basket size). For best result use freshly ground espresso beans.

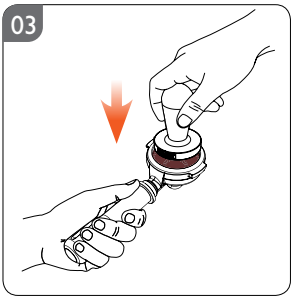

▲ Compress the coffee with the coffee tamper.

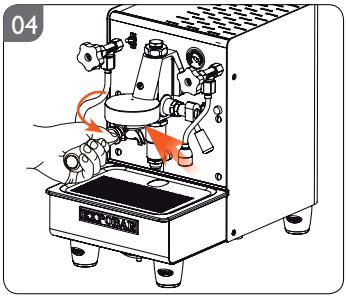

▲ Insert the filled portafilter into the group head and lock it into the correct position.

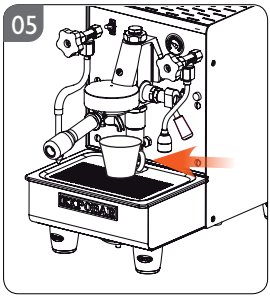

▲ Place one or two cups beneath the outlet spouts.

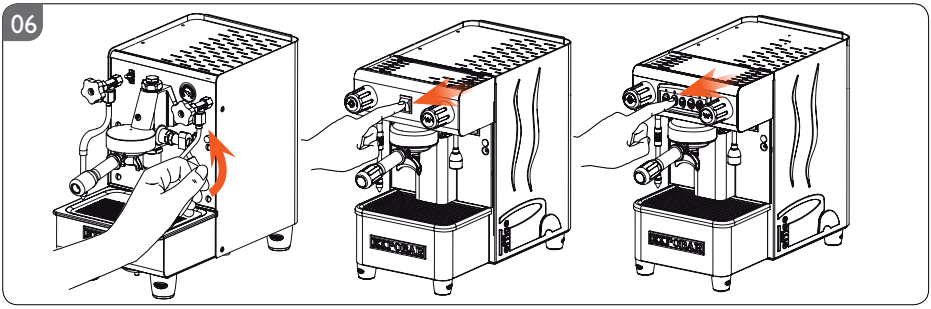

▲ Select the desired option from the drink buttons or raise the group lever.

WARNING!
Never try to open the portafilter while the machine is in operation! The pressurised hot water could cause scalding or serious injury. After dispensing has finished, wait at least 3 seconds before removing the portafilter.

Steaming and frothing milk

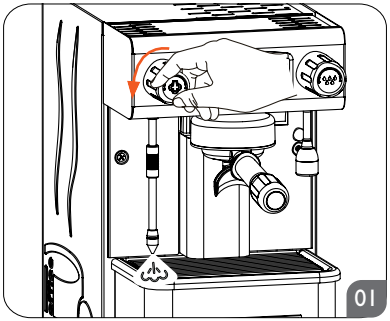

▲ Place the steam wand over the drip tray and open the steam tap for a few seconds to allow condensed water to be ejected. Close the steam lever when only steam comes out.

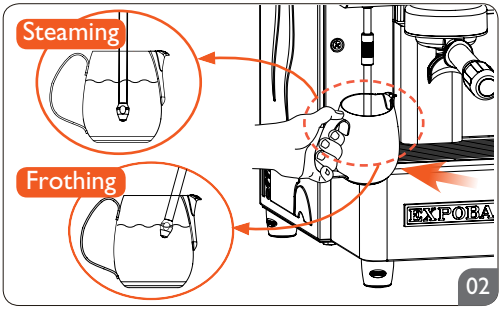

▲ Immerse the steam wand into the milk, making sure the wand tip is submerged.

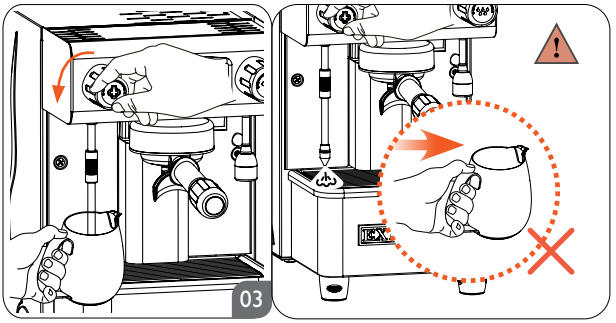

▲ Open the steam tap again to begin steaming or frothing the milk. Do not remove the milk pitcher while steaming.

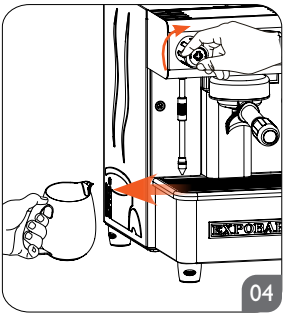

▲ Once the milk reaches the desired temperature, close the tap and remove the pitcher.

WARNING!

Do not allow the steam wand to extend out of the milk when the lever is open, it may cause serious burns and injuries.

► After the process is finished, position the steam wand over the drip tray and open the steam tap for a few seconds to eject any milk remaining in the wand. Close the tap and then wipe down the outside of the steam wand with a damp cloth to prevent nozzle blockage and to keep it clean. Leaving milk in or on the wand will affect the taste of later drinks.

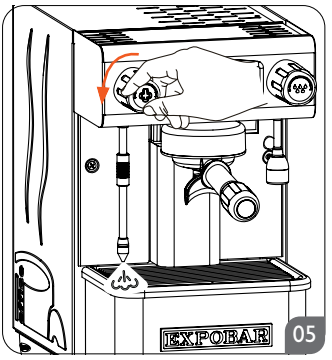

Hot water dispensing

- Place a jug (or similar) under the hot water outlet.
- Open the hot water tap.
- Close the tap as soon as the machine has dispensed the desired amount of water.

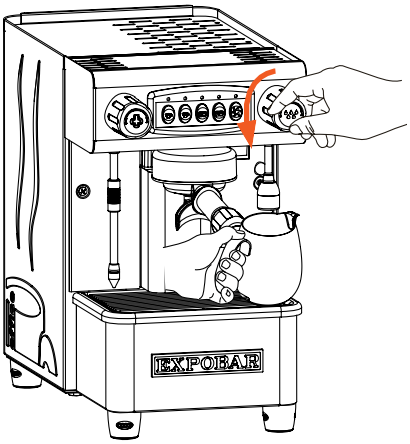

WARNING!

Never expose hands and fingers directly under the water outlet during operation to avoid scalding or serious burns.

ESPRESSO MACHINE WITH BUILT-IN GRINDER

Before using the coffee grinder

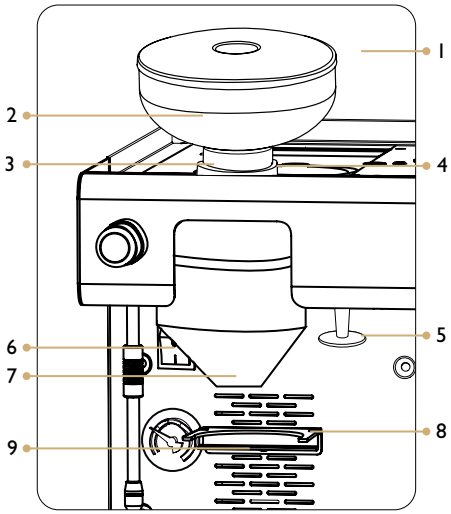

Pos	PART NAME
1	BEAN HOPPER LID
2	BEAN HOPPER
3	BEAN STOP
4	GRINDING ADJUSTMENT DISK
5	COFFEE TAMPER
6	GRINDER POWER SWITCH
7	GRINDER COFFEE OUTLET
8	PORTA FILTER HOLDER
9	GRINDER ACTIVATOR

- Check that the bean hopper (2) is correctly fitted in place.
- Lift up the bean hopper lid (1), fill the bean hopper (2) with coffee beans and close it again.
- Open the bean stop (3) to allow the coffee beans to flow into the grinder.

Dispensing a ground coffee dose

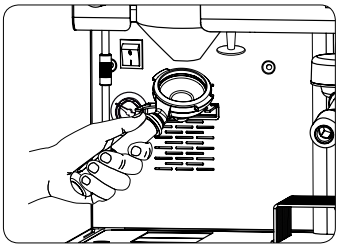

- Place the portafilter on the portafilter holder (9), below the ground coffee outlet.
- Press the portafilter against the grinder activator (10), ground coffee will dispense automatically.
- Release the pressure on the activator when the desired amount is reached.
- Place the portafilter under the coffee tamper (6) and push it up to compact the coffee.

Adjusting the grinder coarseness

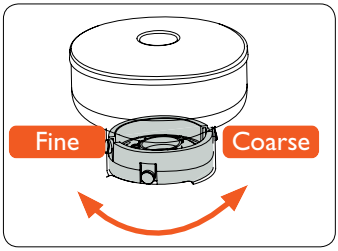

- For a finer grind:

  Hold down the grinder trigger while slowly rotating the adjuster to the right. When the desired grind is achieved release the trigger.
- For a courser grind:

  Hold down the grinder trigger while slowly rotating the adjustment disk (4) to the left. When the desired grind is achieved release the trigger.

Important:
You should only adjust the coarseness when the grinder is turned off.

Note:
If when brewing espresso, if it comes out very slow, the grinder is set too fine. If it comes out too quickly and coffee appears pale and weak, it is too course. Espresso should come out with a slow, thin and continuous flow and dark color.

Recharging the water softener

- Turn the machine off at the main power switch.
- Remove the top panel/cup warming tray.
- Remove the water inlet hose and water softener unit.
- Place the water softener unit in a container of 1% salt water solution (99% clean water + 1% plain table salt) for 10 minutes. The hose does not need to be disconnected.
- After recharging, remove the water softener unit and dry the outside with a clean cloth. The water inside the unit may remain.
- Replace the water softener unit in the water tank and make sure the water tank is filled to dilute any remaining salt water.
- Replace the top panel/cup warming tray and turn on the main power switch. The machine is now ready for use.

Note:
This section only applies to water tank models.

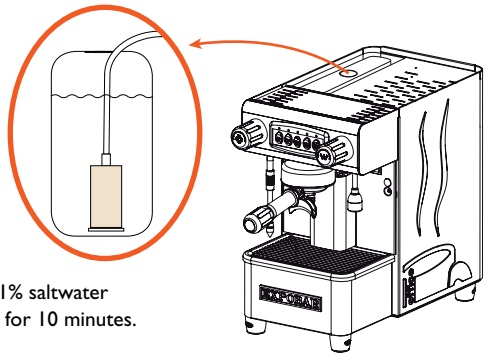

Soak in 1% saltwater solution for 10 minutes.

Coffee machine cleaning

Important:

- To keep the machine looking and working like new, you should always follow the cleaning and care instructions provided in this manual.
- Always turn off the main power switch when cleaning the exterior of the machine.
- All external surfaces should be cleaned with a damp, lint-free cloth that will not scratch the machine.
- Do not use aggressive cleaning detergents, solvents or degreasers. These can damage the surfaces, and plastic and rubber parts, and leave unwanted residue.

Important:

Each day, or 8 hours after dispensing the last coffee, the following cleaning tasks should be performed to maintain the quality and performance of the water system:

- Portafilter: Brew one espresso with the filter empty (around one minute) to flush it out (dispose of this water).
- Steam Wand: Position the wand over the drip tray and open the steam lever for one minute to flush the wand.
- Hot Water Outlet: Place a container under the water outlet and dispense water for 10 seconds (dispose of this water).

Daily cleaning

- Rinse the brewing group, shower plate, and portafilter with hot water for 15 seconds (page 27).
- Clean the external surfaces of the machine with a damp cloth, paying special attention to the stainless steel parts.
- Clean the steam wand and the water tap. Be sure that the nozzles are not clogged or partially blocked with milk or other residue. If it's necessary to remove them for cleaning, be careful not to deform or damage any of the components during removal.
- Clean the dip tray and the stainless steel insert grid under running water with a brush.
- Clean the drain cup by slowly pouring one liter of warm water into it to dissolve and remove the coffee residue that accumulates inside the drain cup and hose.

Weekly cleaning

- Clean the brewing group and portafilter with professional cleaning powder (see page 26).
- Clean the water tank once per week with detergent and a bottle brush under running water to prevent bacteria build-up. Rinse thoroughly and dry the outside before refilling and replacing it in the machine.

Cleaning the brewing group and portafilter

- Unlock and remove the portafilter from the group head.
- Place the cleaning membrane in the filter basket.
- Fill the filter basket with professional cleaning powder for espresso coffee machines.
- Lock the portafilter into the group head.
- Office Control machines: To activate the auto-cleaning program turn off the machine's main power switch. Then press and hold the 2 Short Espressos button then turn on the main power switch. Cleaning will start automatically. Release the 2 Short Espressos button.
- Office Pulser machines: To activate the auto-cleaning program simply cycle the Brew button on for 5 intervals of 10 seconds each.
- Leva Pulser machines: To activate the auto-cleaning program simply raise the brew lever for 5 intervals of 10 seconds each.

WARNING!
Never try to open the portafilter while the machine is in operation! The pressurised hot water could cause scalding or serious injury. After cleaning has finished, wait about 3 seconds before removing the portafilter.

Important:
When the cleaning process is finished, remove the portafilter and run water through the group again to rinse out any residue. Repeat the cleaning process this time without cleaning powder to remove any remaining residue. Store the cleaning membrane in a convenient location for future use.

Note:
- Rinse the group and portafilter with hot water (using only the cleaning membrane and hot water, no cleaning powder) each day that the machine is used.
- Clean the group and portafilter with cleaning powder once a week.

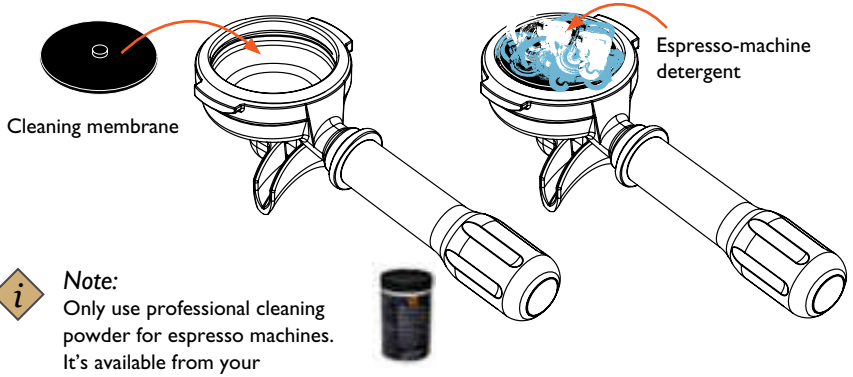

Note:
Only use professional cleaning powder for espresso machines. It's available from your distributor.

Part no: 1104162

Cleaning the gasket and shower plate

Cleaning the gasket

While making espresso, coffee grounds will naturally accumulate on the group's sealing surface. Allowing an excessive amount of grounds to build up can prevent the portafilter from properly sealing to the group head. In extreme cases, such as leaving a used portafilter in the group head for several days, water can even become blocked from passing through the shower plate.

To prevent these problems, perform the following cleaning procedures daily:

- Place the cleaning membrane in the filter basket (without detergent).
- Insert the portafilter in the group head, but do not tighten fully (the portafilter should be loose).
- Press the Continuous Dispensing button for Control machines, or press the brew button for Pulser machines. For Leva machines, raise the brewing lever for 15 seconds.
- Make an opening-closing movement of the portafilter in place without closing it. Water will now flow around the portafilter, flowing through the closing surface and cleaning it.

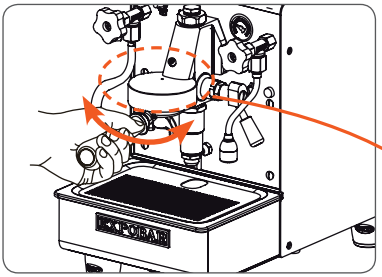

WARNING!
Take special care to avoid scalding when performing this cleaning operation, as the hot water used to clean the gasket will spill over the sides of the portafilter.

WARNING!
Do not fully tighten the portafilter. If fully tightened, high-pressure water may spray out and cause scalding or serious injury.

Cleaning the shower plate

- Remove the portafilter from the group head.
- Clean the shower plate and group gasket with a soft brush to remove any coffee residue.

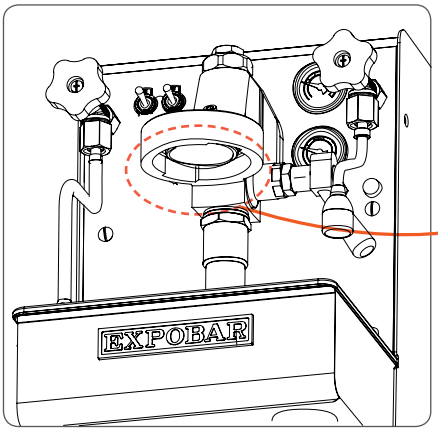

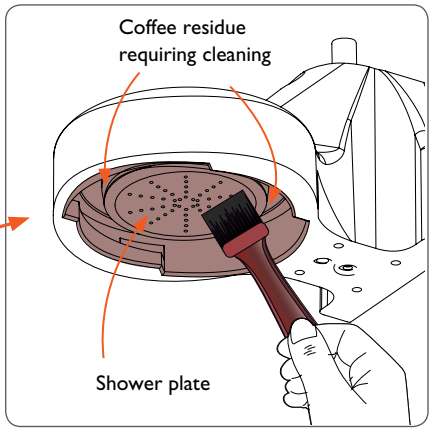

Additional handling of the machine

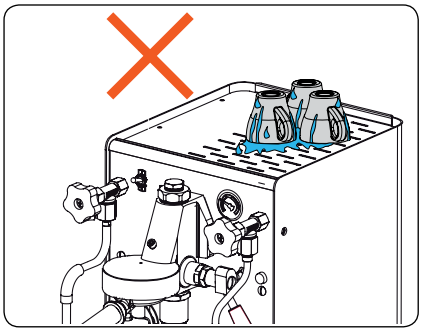

Important:
Do not place wet cups directly on the cup shelf. Allowing water to drip into the machine can cause mechanical and electrical damage.

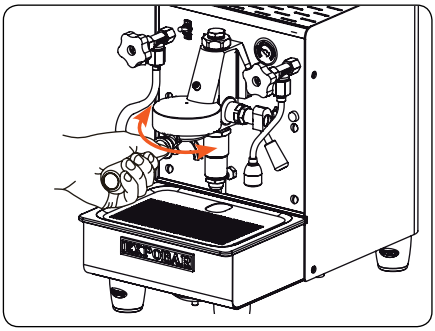

- Always remove and insert the portafilters gently. Never use excessive force to try to close the portafilter. If the portafilter does not turn and lock into place without excessive force this usually indicates that there is too much coffee in the filter basket.

STORAGE AND DISPOSAL OF MACHINE

Storing the machine

Before storage be sure to:

- Perform all weekly and periodic cleaning procedures described in this manual (see pages 25-27).
- Disconnect and roll up the power cord (this should be performed by a qualified person).
- Disconnect the machine's water inlet hose from the domestic water supply and drain the boilers (this should be performed by a qualified person).
- Clean the drip tray and exterior of the machine to remove any coffee or other residue.
- Cover / re-pack the machine in its original carton and store it in a dry place where it will not be exposed to extreme temperatures or humidity.
- When returning the machine to service after long-term storage perform all weekly and periodic cleaning procedures before use.

Disposal of the machine

- Disconnect and roll up the power cord (this should be performed by a qualified person).
- Disconnect the machine's water inlet hose from the domestic water supply and drain the boilers (this should be performed by a qualified person).
- Pack up and ship/deliver the machine to an authorized recycling center.

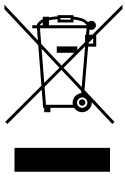

Touchpad

For machines equipped with an electronic control panel (5 buttons per brewing group), the following controls are available:

- Volumetric control for four different espresso doses.
- Time-controlled hot water dosage (on customer's request).
- Automatic filling and level control of the boiler.
- Automatic switch off of the heating element at low water level (on customer's request).
- Brewing group auto-cleaning/descaling.

The control panel is by default programmed with 4 standard drink doses (these can be re-programmed as desired) and one continuous brewing function. The four left-side buttons (1 short espresso – 1 long espresso – 2 short espressos – 2 long espressos) brew the programmed amount and then stop automatically; the right-side button brews continually until stopped manually by pressing again.

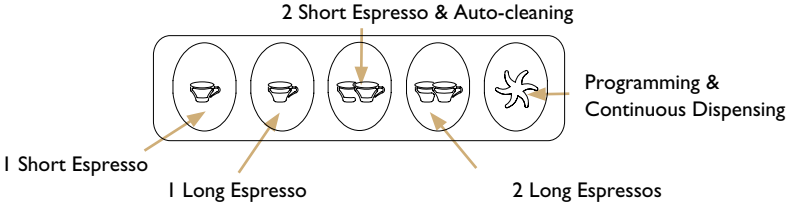

Dosage programming of the drink buttons (Control models only).

Important:
Always use a portafilter filled with fresh coffee grounds for every new dose programmed.

- Press the Continuous Dispensing button for 4 seconds, it will begin to flash.
- Within 5 seconds, press the button of the dispensing option that you want to program: 1 Short Espresso, 1 Long Espresso, 2 Short Espressos or 2 Long Espressos. The lights on the selected drink button and the Continuous button will remain on.
- The group will start dispensing coffee. When the desired volume is reached in the cup, press the selected drink button again to stop dispensing. This volume setting will be saved and the button's light will turn off. The Continuous button will remain illuminated.
- Repeat this process for all of the dispensing options that you wish to reprogram.

If you only need to reprogram one of the dispensing options, follow the steps above and program just that option. All of the other dispensing options will remain unchanged.

Note:
The instructions on this page apply to Leva Multiboiler machines only.

On Leva Multiboiler machines the temperature of each group boiler can be programmed and adjusted individually via the digital temperature adjusting system.

The temperature control is performed by a PID thermostat, which provides accurate and stable temperature management for the group.

Normal mode

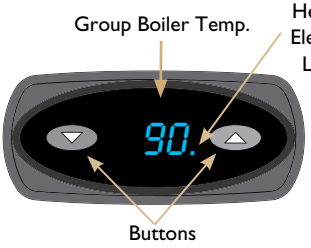

During normal mode, the temperature display shows the current temperature of the group boiler. When the boiler's heating element is working and water is heating up, a small blue dot will illuminate to indicate this function.

Note:
Adjust the group boiler's temperature up with the button and down with button.

Turning the thermostat and group boiler off/on



To turn the thermostat and its group boiler off, press and hold the button for 2 seconds. The thermostat selected will be disconnected, "OFF" will be displayed, and the group will start to cool down.

To connect the thermostat:
If the thermostat is "OFF", press either the or button. The thermostat will be turned back on and the group's current temperature will be displayed as the group boiler starts to heat up.

Adjusting the group boiler temperature



To adjust the group operating temperature setting follow the steps below:

- Press and hold the button until the temperature display shows "PrG".
- Within 2 seconds, press the button, the display will show the current group temperature setting.
- Within 2 seconds, begin to adjust the temperature setting up with the button, or down with the button.
- When the desired temperature is displayed, wait 3 seconds. The thermostat will automatically return to normal mode with the new temperature setting.

Reset temperature to factory default



If the thermostat's operating program is lost, or if an abnormal group temperature setting appears, reset the system to the factory defaults. Follow the steps below:

- Turn off the machine, press and hold down the  button, then turn the machine on at the power switch.
- Release the button when the system displays the "PrS" message.
- Turn the machine off and on again at the power switch to restart the thermostat.

Thermostat alarms



If the temperature gauge in the group's boiler has short-circuited, the system will display the "A1" error message. Call a service technician to replace or repair it.



If the temperature gauge cable is disconnected, the system will display the "A2" error message. Call a service technician to repair it.

Quick Troubleshooting Guide

The following checks can be carried out by users only after the machine has been turned off and disconnected from the power supply. For all other nonspecific machine faults, disconnect the machine from the power supply and immediately contact authorised and qualified service personnel.

Problem	Possible cause	Solution
The machine does not start up	The plug is not correctly inserted into the power socket	Check that the plug is correctly inserted and that the power socket is operational.
	The circuit breaker and/or differential are disconnected.	Ensure that they are connected and operational.
	The cable and/or plug are damaged.	Call a service technical to replace it.
The steam wand does not dispense steam	The steam wand is clogged by milk	Clean the wand and, if necessary, remove the nozzle and unclog it using a pin or needle.
Water is found underneath the machine	The drainage tube is blocked.	Clean the drainage tube.

Faults produced by limescale	
Coffee not dispensed at right temperature:	Heat-exchanger outlet pipes clogged by limescale.
Brewing groups do not dispense water:	Water system is clogged by limescale.
90% of faults are due to limescaling inside the coffee machine (due to not softening the water). To avoid these faults, maintain the water softener regularly.	

Coffee-grinding issues	
Coffee dispensing is very fast:	The coffee grind is too coarse. Adjust the coffee-grinder to a finer setting.
Coffee dispensing is very slow:	The coffee grind is too fine. Adjust the coffee-grinder to a coarser setting.

For the warranty to be valid the conditions for maintenance must have been followed according to our instructions, proper precautions have been taken, and warranty claim has been issued without delay.

The affected equipment shall not be used while awaiting service if there is any risk that the damage or defect could worsen.

The warranty shall not cover consumable supplies such as glassware, or normal maintenance such as cleaning of filters. Additionally, damages of an external nature, such as contaminants in the water, limescaling, incorrect voltage or power surges, and water supply issues such as pressure changes or service disconnection are not covered by this warranty.

The warranty will not cover damages or defects caused by incorrect handling or operation of the appliance.

FOR SERVICE

Please contact your dealer

Your Dealer

crem®
INTERNATIONAL

www.creminternational.com