NEW ELEGANCE

USER MANUAL



UM_EN
Date: 150106

EXPOBAR®

Original instruction

CONTENT 2
SYMBOL DESCRIPTION 4
Notification intensity levels 4
GENERAL 5
Introduction 5
General instructions 5
Warnings 5
Precautions 6
Intended use 6
TECHNICAL SPECIFICATIONS 7
New Elegance 1GR 7
Accessories 7
New Elegance Control 2GR 8
Accesories 8
New Elegance Display Control 9
Accesories 9
OVERVIEW OF COMPONENTS 10
New Elegance MINI Control 1GR 10
New Elegance MINI Pulser 2GR 11
New Elegance MINI Control 1GR with Grinder 12
New Elegance Control 2GR 13
New Elegance Control 2GR with Grinder 14
New Elegance Control 3GR 15
DIMENSION SKETCH 16
New Elegance MINI 1GR 16
New Elegance MINI 2GR 16
New Elegance MINI 1GR with Grinder 17
New Elegance Control 2GR 17
New Elegance 2GR with Grinder 18
New Elegance 3GR 18
TRANSPORT 19
Packaging 19
Delivery inspection 19
INSTALLATION 19
Positioning 19
Electrical installation 20
Connection types 20

Water connection 21
Pressure and temperature 21
Starting the machine 21
The porta-filter sets 22
Inserting the porta-filter into the group 22

OPERATION 23
Espresso brewing 23
Steaming and frothing milk with the turbo steamer 24
Hot water dispensing 25

CLEANING AND MAINTENANCE 26
Machine cleaning 26
Daily cleaning schedule 26
Weekly cleaning schedule 26
Cleaning the brewing group and porta-filter 27
Cleaning the gasket and shower plate 28

STORAGE AND DISPOSAL 29
Additional handling of the machine 29
Long-term storage 29
Machine disposal and recycling 29

PROGRAMMING 30
Buttons functions 30
Additonal button functions 30
Programming the turbo steamer temperature 31
Programming the coffee dosage 31

PROGRAMMING USING THE DISPLAY 32
Machine status 32
Accessing the second menu level 33
Setting the clock: hours, minutes and day 33
Auto On/Off 34
Counters 34

MESSAGES AND ALARMS 35

TROUBLESHOOTING 36

Notification intensity levels

There are four different levels of notification intensity within this manual, as identified by signal words DANGER, WARNING, IMPORTANT, and NOTE. The level of risk and imporance of the notification is determined by the following definitions. Always observe the warnings to ensure safety and prevent potential injury and product damage.



Important:

Alerts against unsafe practices. Observe *Important* notifications to ensure food safety, prevent possible minor personal injury, or damage to the machine.



WARNING:

Indicates a potentially hazardous situation which, if the *WARNING* is ignored, could result in serious injury or even death.



DANGER:

INDICATES A IMMINENTLY HAZARDOUS SITUATION WHICH, IF NOT AVOIDED, WILL LIKELY RESULT IN SERIOUS INJURY AND EVEN DEATH.



Note:

Gives additional information which may be helpful during the operation, routine maintenance, and cleaning of the machine.

Introduction

Thank you for choosing a New Elegance espresso machine.
We hope you enjoy it !

- Read the user manual before using the machine.
- This manual contains important instructions on intended and safe use of the coffee machine.
- Keep this manual close to hand for future reference. If damaged or lost, request a copy from the manufacturer.

General instructions

- Machine installation and certain maintenance operations should only be performed by qualified service personnel.
- All safety instructions and warnings contained in this manual should be observed at all times to ensure safe installation, use, and maintenance.
- Do not attempt to remove covers or safety shields to access the interior of this machine or make repairs. Repairs should be made by an authorised technician or service centre.
- Owners are liable for ensuring that users have been properly trained to operate the machine and understand the potential risks involved.
- The owner or installer will be liable for all non-authorised modification of the machine.
- Non-authorised alteration or modification of the machine will immediately void the manufacturer's warranty.
- This manual references the machine at the time of sale. The commercial availability of subsequent versions including modifications, upgrades or adaptations does not oblige the manufacturer to apply any changes to this machine, nor is it obliged to update the documentation supplied.
- The manufacturer reserves the right to withdraw currently available manuals whenever deemed appropriate and reasonable.
- Periodically, some updates and changes may be required for this machine. In this event, a technician will be responsible for ensuring the change is made in accord with manufacturer's specifications.

Warnings

Note: The manufacturer is not liable for damage to persons or property resulting from failure to follow the instructions and warnings listed below when installing and using this machine.

- Install the machine in a horizontal position and away from heat sources and flammable objects.
- This machine should only be installed on a water-resistant work surface that is capable of adequately supporting the machine's weight.
- Place the machine in a location accessible only to personnel trained to operate it.
- Keep all hazardous packaging materials, such as plastic bags, styrofoam, and staples, out of reach of children.
- Plug the machine into a properly installed, earth grounded electrical outlet with line voltage that matches the specifications for the machine.
- Ensure that the power supply voltage does not fluctuate by more than 6%.
- Position the power cable so that users cannot trip over it. Keep the power cable away from sharp edges and heat sources.
- Children should never be allowed to play with the machine.
- This appliance is not suitable for installation in an area where a pressure washer may be used.
- Do not use the machine outdoors, where it would be exposed to severe weather or extreme temperatures..
- If the power cable is damaged, it may only be replaced by the manufacturer or its aproved service technician.
- Do not remove or disable any of the mechanical, electrical, or thermal protection safety equipment.

- In case of emergency, (e.g., the machine catches fire or becomes unusually hot or noisy), disconnect the power immediately and turn off the water supply.
- If the machine is not going to be used for an exended period of time, disconnect the power. When disconnecting the power, pull the plug rather than the cable.
- When packed for storage, store the machine in a dry place with an ambient temperature above 5°C. Boxes may be stacked up to three units high of the same model. Do not place other heavy items on top of the box.
- If the machine is likely to be exposed to temperatures below 0 °C during handling and transport, make sure that service personnel empty the boiler and water system. (The machine's boiler and water system is empty when delivered from the factory.)
- To ensure fault-free machine operation, only use manufacturer-approved replacement parts and accessories.

Precautions

- Before performing maintenance and/or moving the machine, disconnect the machine from the power supply and wait for it to cool down.
- Do not place any liquids on the machine.
- This appliance must not be cleaned with a pressure washer.
- Never immerse the machine, plug or power cable in water, as there is a risk of electric shock.
- Do not touch the machine's hot surfaces or dispensing equipment.
- Do not touch the machine if your hands or feet are wet.
- Do not operate the machine if any part except the dispensing equipment is wet.
- Place the machine out of reach of children.
- This appliance can be used by children from age 8 and above and prsons with reduced physical, sensory, or mental capabilities or lack of experience and knowledge if they have been given supervision or instruction concerning use of the appliance in a safe way and understand the hazards involved.
- Children shall not play with the appliance.
- Cleaning and user maintenance shall not be made by children without supervision.
- Do not use the machine if the power cable or plug is damaged, or the machine has been dropped. Contact a service technician for repairs or to ensure that it is safe for use.
- Do not blockthe vents with rags or other objects.
- Do not insert foreign objects into the vents.
- Check the drain regularly to make sure that waste water is empting properly.

Intended use

- The coffee machine has been designed and manufactured to make espresso coffee and other hot drinks (e.g., steaming and frothing milk). Do not use it for any other purpose.
- The machine is intended to be used by trained personnel for preparing foodstuffs.
- This machine is not intended for use in industrial kitchens, domestic kitchens, or similar locations.
- The manufacturer will not be held liable for damage to persons or property due to incorrect, improper or negligent use by non-professional personnel.
- To ensure optimal performance, install the machine in a location where these parameters will not be exceeded:
  - Maximum permissible inlet water pressure: 600 KPa (6 Bar)
  - Minimum permissible inlet water pressure: 200 KPa (2 Bar)
  - Maximum inlet water temperature: 40°C
  - Ambient temperature is between +10 °C (min.) and +40 °C (max.).

New Elegance 1GR

SPECIFICATIONS	New Elegance		
	MINI control	MINI pulser	MINI with grinder
Machine model, Standard	EAED-C32B-12AB 220-240V 1N~ 50-60 Hz 2800W	-	-
Machine model, Take Away	EAED-C32B-22AB 220-240V 1N~ 50-60 Hz 2800W	-	-
Steam wand	1 unit		
Hot water outlet	1 unit		
Temperature control	Regulated by pressure switch		
Temperature control by group	No		
Programmed via display	No		
Dispensing system for tall cups	Optional		
Energy saving mode	No		
Height, width, depth (mm)	520, 470, 610		630, 470, 610
Boiler volume (L)	6		
Power supply	see machine model info	220-240V 1N~ 50-60 Hz 2800W	220-240V 1N~ 50-60Hz 3125W
Power supply (optional)	110V 1N~		
Water connection	Female 3/8" thread		
Machine weight (kg)	35.45	47.00	40.45
Steam boiler operating pressure	Between 0.8 and 1.2 bar		
Ambient noise	< 70 db		

Accessories

MODEL	2-spout porta-filter	1-spout porta-filter	55-cm inlet hose	Blind filter	Drainage tube (150 mm)
	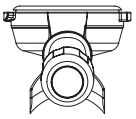	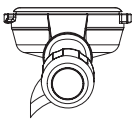	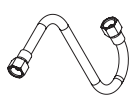		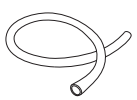
MINI 1GR	1 unit	1 unit	1 unit	1 unit	1 unit

New Elegance Control 2GR

SPECIFICATIONS	New Elegance 2GR			
	MINI	Pulser	Control	Control with grinder
Machine model, Standard	EBED-C32B-12AB 220-240V 1N~ 50-60 Hz 2800W	EBFE-D13B-12AB 380-415V 2N~ 50-60 Hz 3350W	EBEE-D32B-12AB 220-240V 1N~ 50-60 Hz 3350W	-
Machine model, Take Away	EBED-C32B-22AB 220-240V 1N~ 50-60 Hz 2800W	EBEE-D12B-22AB 220-240V 1N~ 50-60 Hz 3350W	EBEE-D41B-22AB 220-240V 1N~ 50-60 Hz 3350W	-
Steam wand	1 units			
Hot water outlet	1 unit			
Temperature control	PID regulation			
Temperature control by group	Yes			
Programmed via display	No			
Dispensing system for tall cups	Optional			
Energy saving mode	Yes			
Height, width, depth (mm)	520, 470, 610	520, 710, 610		670, 710, 600
Boiler volume (l)	6	11.5		
Power supply	220-240V 1N~ 50-60 Hz 2800W	220-240V 1N~ 50-60 Hz 3350W	220-240V 1N~ 50-60 Hz 3350W	220-240V 1N~ 50-60 Hz 3600 W
Power supply (optional)	110V 1N~	380V 3N~ 4500 W 50-60 Hz		
Water connection	Female 3/8" thread			
Machine weight (kg)	40.45	55.50	55.50	53.35
Steam boiler operating pressure	Between 0.8 and 1.2 bar			
Ambient noise	< 70 db			

Accesories

MODEL	2-spout porta-filter	1-spout porta-filter	55-cm inlet hose	Cleaning membrane	Drainage tube (150 mm)
	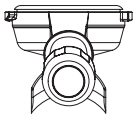	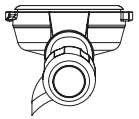	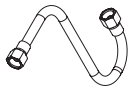	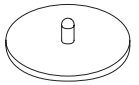	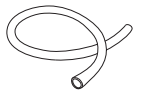
MINI 2GR	2 units	1 unit	1 unit	1 unit	1 unit
2GR	2 units	1 unit	1 unit	1 unit	1 unit

New Elegance Display Control

SPECIFICATIONS	New Elegance display control	
	2GR	3-4GR
Machine model, Standard	EBEE-D41B-12AB 220-240V 1N~ 50-60 Hz 3350W	-
Machine model, Take Away	EBEE-D41B-22AB 220-240V 1N~ 50-60 Hz 3350W	-
Steam wand	2 units	
Hot water outlet	1 unit	
Temperature control	PID regulation	
Temperature control by group	Yes	
Programmed via display	Yes	
Dispensing system for tall cups	Optional	
Energy saving mode	Yes	
Height, width, depth (mm)	520, 710, 610	510, 990, 600
Boiler volume (l)	17.5	17.5
Power supply	220-240V 1N~ 50-60 Hz 3350W	380V 2F+N~ 4000 W 50-60 Hz
Power supply (optional)	380V 3N~ 4500 W 50-60 Hz	380V 3F+N~ 6000 W 50-60 Hz
Water connection	Female 3/8" thread	
Machine weight (kg)	73.45	81.40
Steam boiler operating pressure	Between 0.8 and 1.2 bar	
Ambient noise	< 70 db	

Accesories

MODEL	2-spout porta-filter	1-spout porta-filter	55-cm inlet hose	Cleaning membrane	Drainage tube (150 mm)
	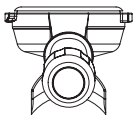	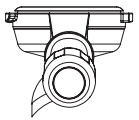	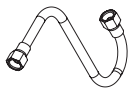	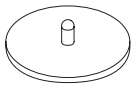	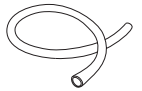
2GR	2 units	1 unit	1 unit	1 unit	1 unit
3GR	3 units	1 unit	1 unit	1 unit	1 unit

Front view of the machine

New Elegance MINI Control 1GR

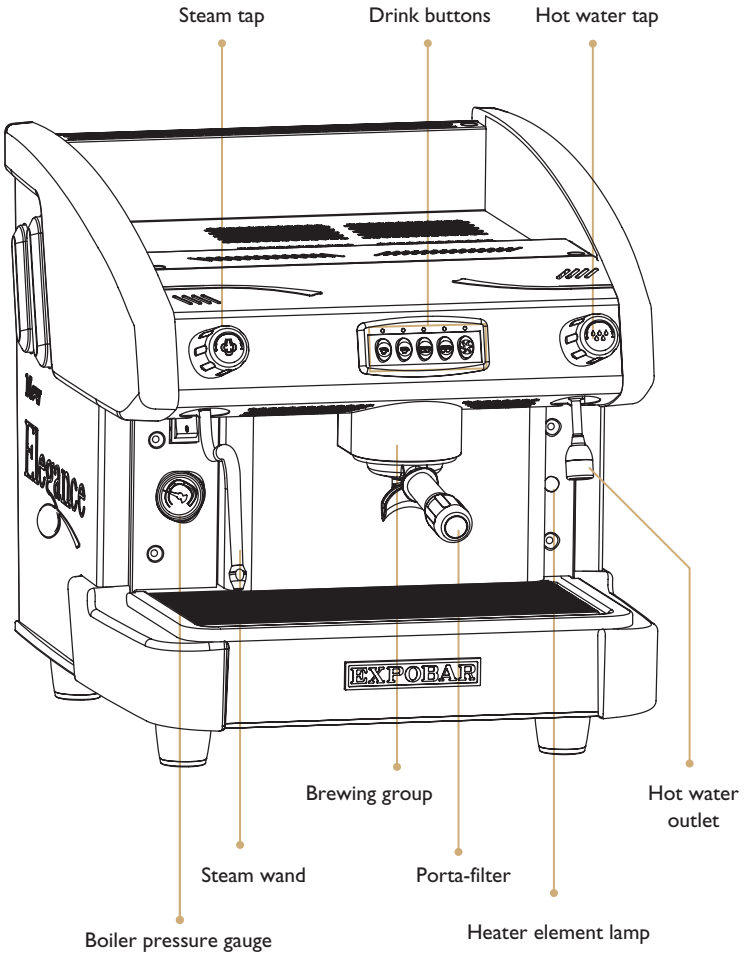

Front view of the machine

New Elegance MINI Pulser 2GR

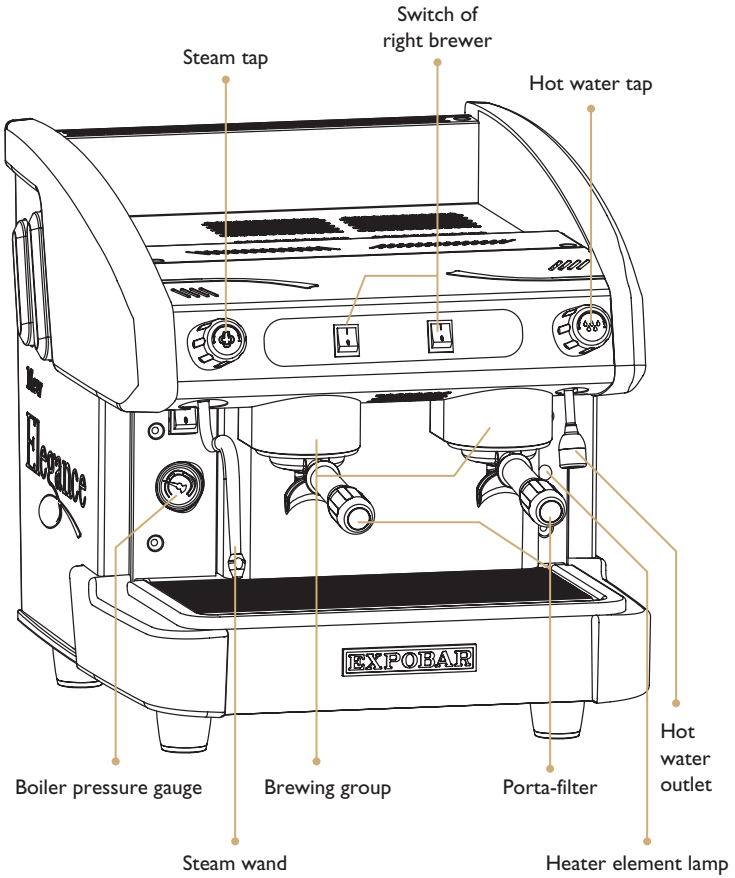

Front view of the machine

New Elegance MINI Control 1GR with Grinder

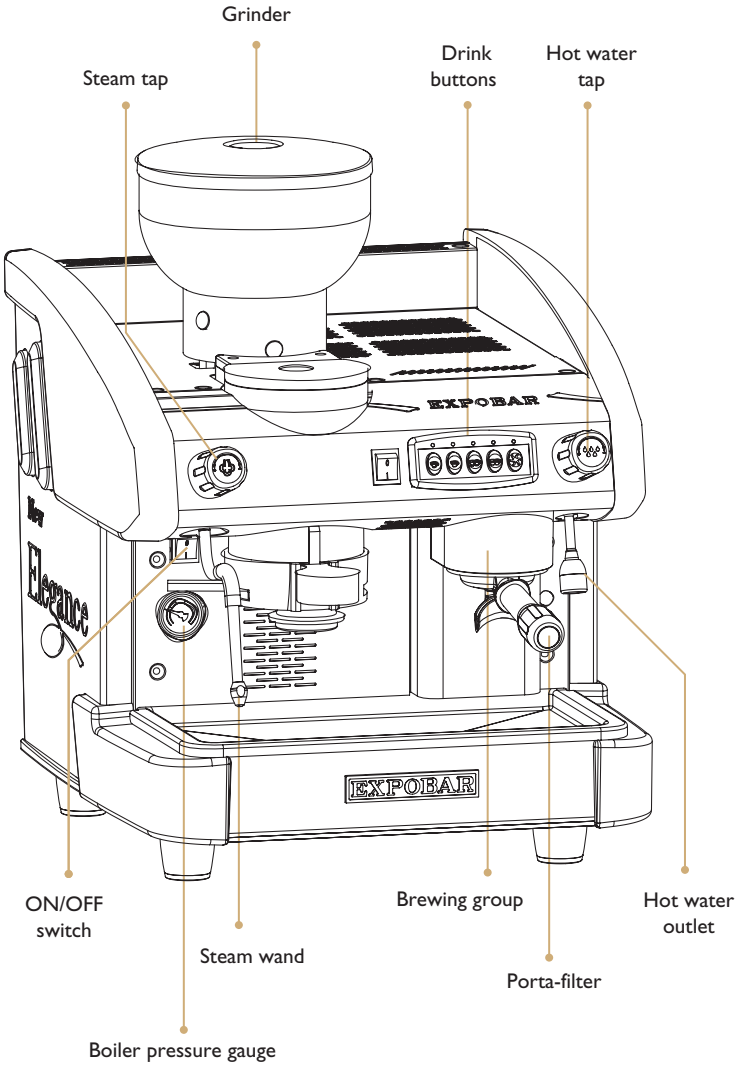

Front view of the machine

New Elegance Control 2GR

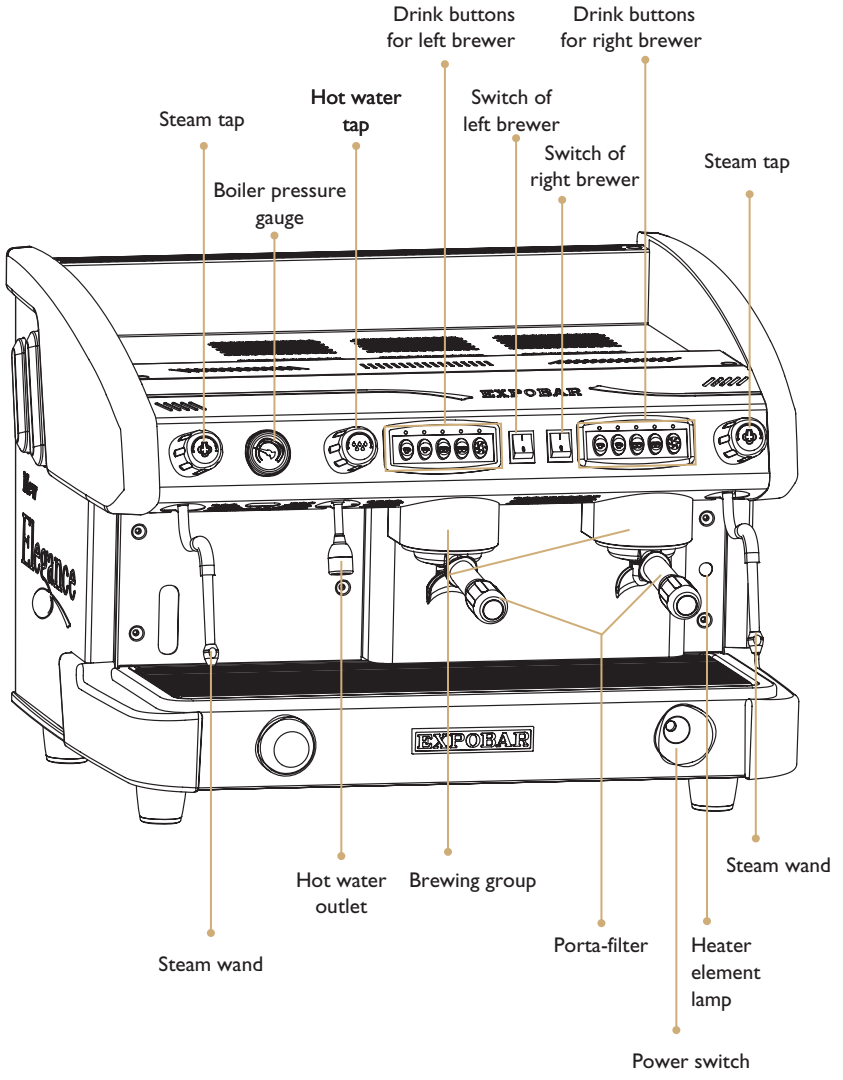

Front view of the machine

New Elegance Control 2GR with Grinder

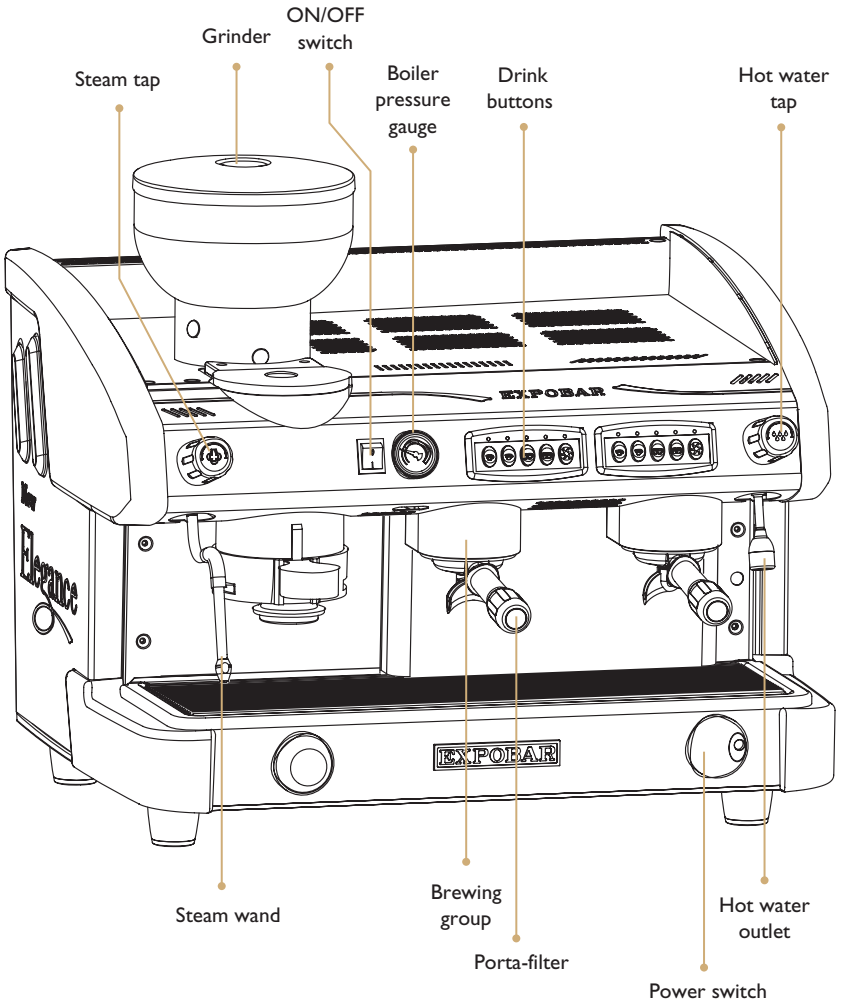

Front view of the machine

New Elegance Control 3GR

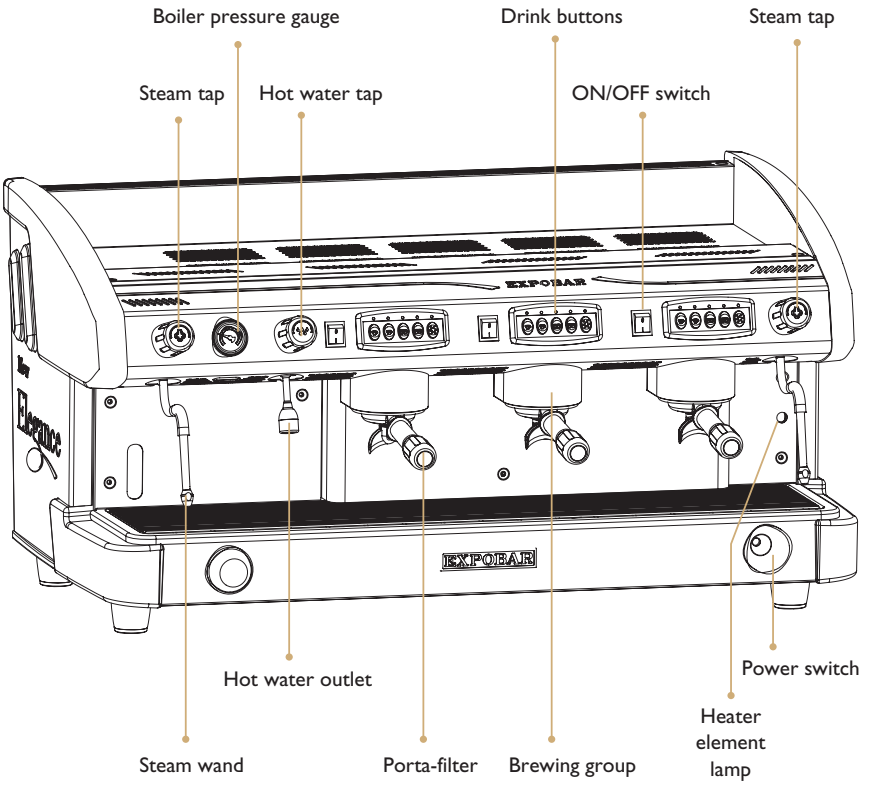

New Elegance MINI 1GR

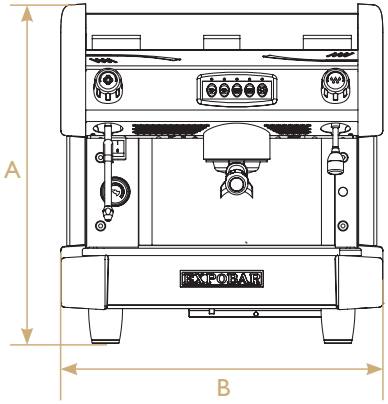

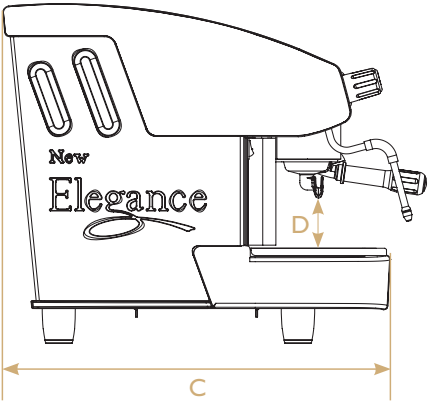

Model	A	B	C	D
MINI control 1GR	510 mm	500 mm	600 mm	74 mm
MINI pulser 1GR	510 mm	500 mm	600 mm	74 mm

New Elegance MINI 2GR

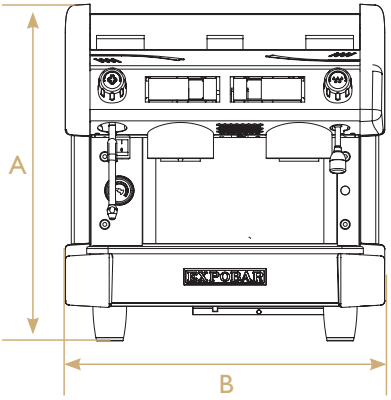

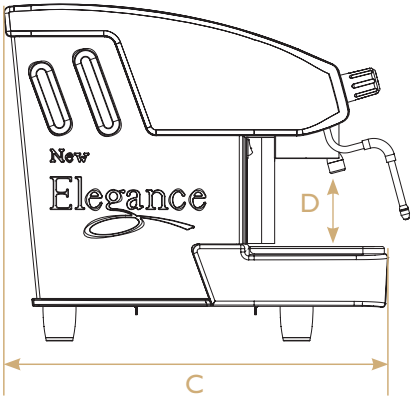

Model	A	B	C	D
MINI control 2GR	510 mm	500 mm	600 mm	74 mm
MINI pulser 2GR	510 mm	500 mm	600 mm	74 mm

New Elegance MINI 1GR with Grinder

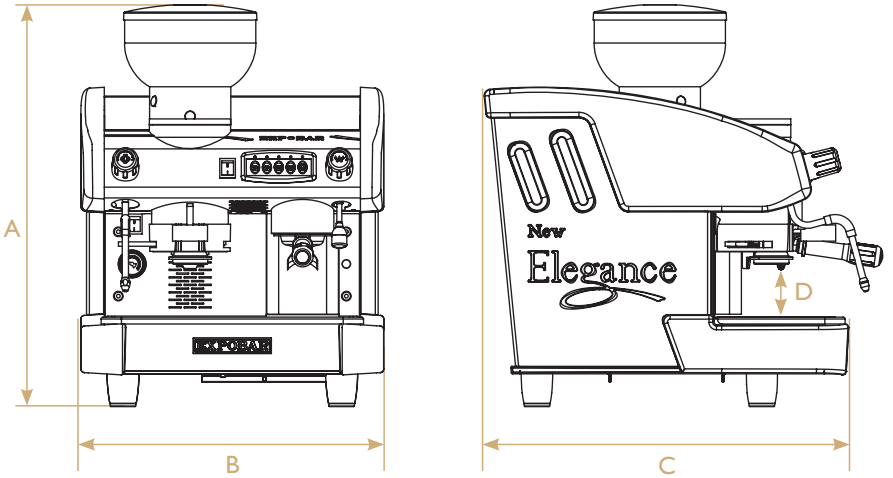

Model	A	B	C	D
MINI control 1GR with grinder	690 mm	500 mm	600 mm	74 mm
MINI pulser 1GR with grinder	690 mm	500 mm	600 mm	74 mm

New Elegance Control 2GR

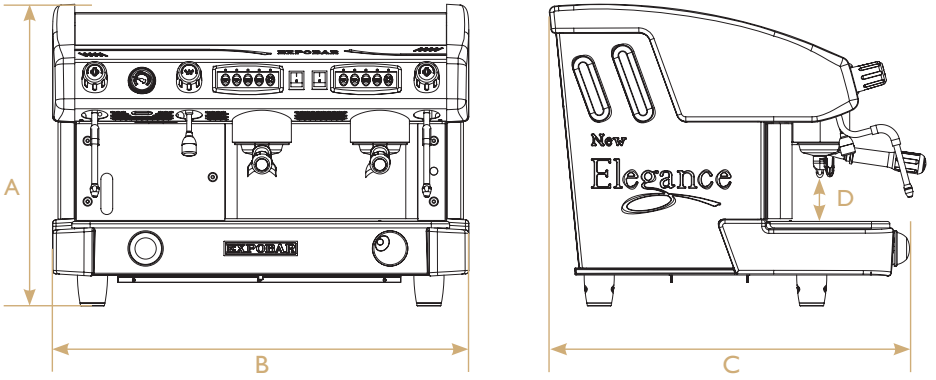

Model	A	B	C	D
Control 2Gr	510 mm	710 mm	600 mm	124 mm
Display control 2Gr	510 mm	710 mm	600 mm	124 mm

New Elegance 2GR with Grinder

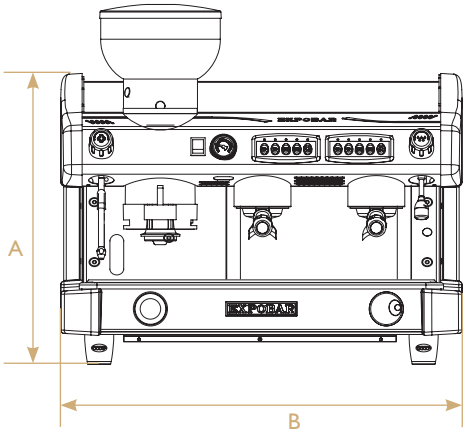

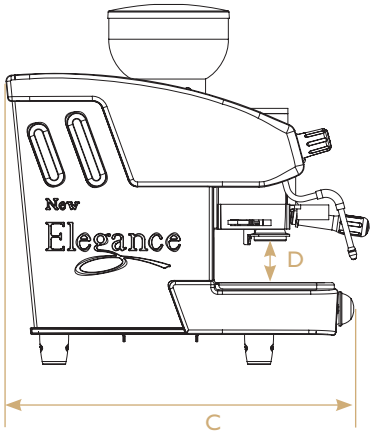

Model	A	B	C	D
Pulser 2Gr with grinder	670 mm	710 mm	600 mm	124 mm
Control 2Gr with grinder	670 mm	710 mm	600 mm	124 mm
Display control 2Gr with grinder	670 mm	710 mm	600 mm	124 mm

New Elegance 3GR

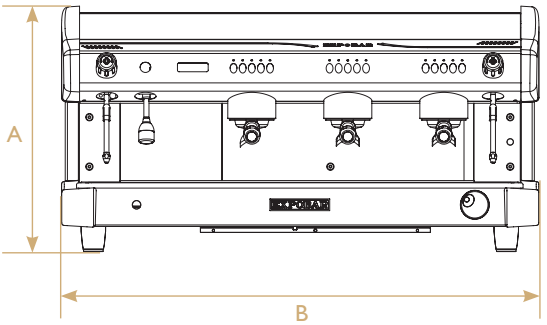

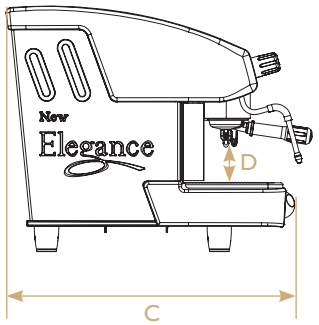

Model	A	B	C	D
Control 3/4Gr	670 mm	990 mm	600 mm	124 mm
Display control 3/4Gr	670 mm	990 mm	600 mm	124 mm

Packaging

- The machine is shipped in a custom-designed carton which utilizes model-specific polystyrene cushions to protect it from damage.
- The machine's carton features standardized handling symbols to explain proper shipping and storage methods.
- The machine must remain in a horizontal position during the transport. Do not store or handle the machine except on its feet.
- During transport protect the carton and machine from impact drops, crushing, shocks, moisture and exposure to extreme temperature.

Delivery inspection

- Upon receipt and delivery ensure that the machine is in the exact condition described in the enclosed documentation, and that all accessories are included. Missing items should be reported to the manufacturer or dealer immediately.
- Damage caused during transport should be reported to the shipping agent and the machine's distributor immediately.
- Packaging materials are potentially dangerous and should be kept away from children.
- The carton and all packing materials are recyclable and should be returned to a recycling center for disposal.

INSTALLATION

Positioning

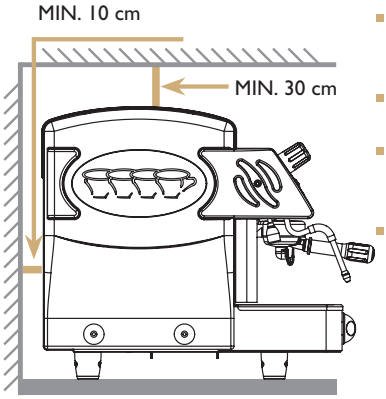

- Install the machine on a level, sturdy, and water-resistant surface approximately 110cm above floor level for ease of access and usage.
- Adjust the feet to ensure that it dispenses coffee evenly to all cups.
- Ensure enough free space is available above (>30cm) and behind (>10cm) the machine to ensure easy cleaning and maintenance and adequate ventilation.
- Do not install the machine if it is wet or damp. Allow it to dry completely and ask a service technician to ensure that none of the electrical components have been affected.

Note:
Leave an air gap of approximately 30cm above the machine and 10cm behind it to ensure adequate ventilation.

Electrical installation

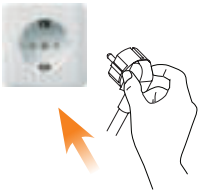

The machine should only be connected to the power supply by qualified personnel. The following safety instructions should be obeyed at all times:

- Ensure that the electrical requirements stated on the TECHNICAL SPECIFICATIONS (pages 7 - 8) match the specifications of the power supply at the outlet.
- Ensure that the domestic electrical supply where the machine is being installed is rated for and able to provide the power required by the machine. Insufficient power supply, wiring, grounding, or insulation can result in overheating and possibility of fire.
- The coffee machine must be connected to an earth grounded electrical outet that complies with the regulations in force in the country of installation.
- Ensure that a circuit breaker engineered for the power consumption of the machine is installed to protect the domestic electrical supply, as specified on the ratings plate located under the drip tray.
- Do not connect the machine to the domestic power supply via extension cords, plug adapters, or shared outlets.

The manufacturer will not be held liable for damage to persons, animals or property resulting from incorrect installation of the coffee machine.

DANGER!

If the power cable or plug is damaged, it must be replaced by the manufacturer, distributor, or its approved service technician in order to avoid **RISK OF SERIOUS INJURY OR DEATH!**

Connection types

- Connect the machine according to the specification on the ratings plate located under the drip tray.

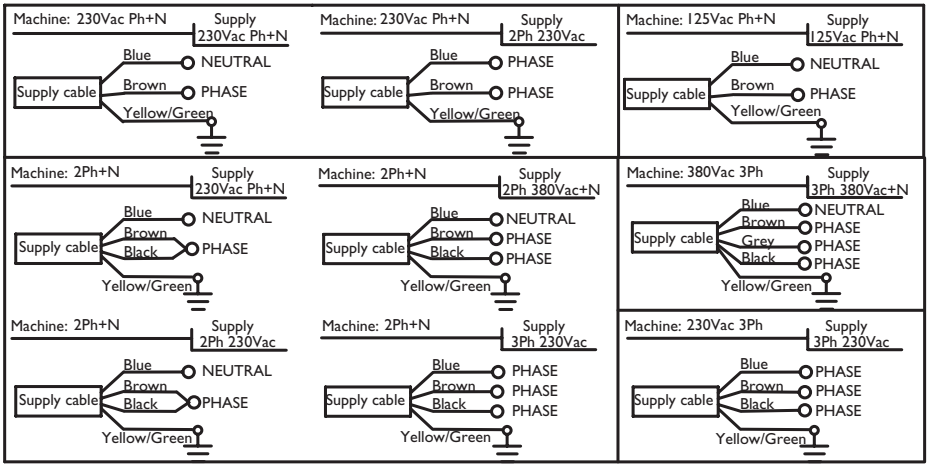

Water connection

- Connecting the machine to the domestic water supply must be performed by a qualified person.
- Purge at least 20 liters of water from the domestic water supply before connecting the machine to it to flush out any debris that may be in the plumbing sytem that would otherwise accumulate inside the boilers.
- The domestic plumbing system should be fitted with a brass 3/8" NPT male pipe fitting and an in-line shut-off valve. Connect the 180cm water inlet hose included with the machine to the domestic water supply and tighten the line fittings with a wrench to 15 ft. lbs. / 20N-m.
- Only use safe drinking water with a hardness rating between 5°fH and 8°fH (French hardness degrees) or 20 to 32 ppm (parts per million as calcium). If the hardness value is below this limit, corrosion of hydraulic components is likely. If the value is higher, lime-scaling inside the boiler will occur. In both cases, the proper function of the machine and quality and taste of the coffee will be negatively affected.
- If necessary, connect the machine to a water softener to reduce water hardness using the flexible 55cm hose included in the accessory box.
- Connect one end of the corrugated drain tube to the drain cup in the machine, connect the other end to the plumbing drainage system in the installation area.

Important:

- Only use the hoses supplied with the machine. Never reuse damaged hoses.
- Ensure that the drainage tube is not twisted and that it is below the level of the drain cup.

Pressure and temperature

- Boiler pressure is directly controlled by water temperature (fig. 01).
- This machine is fitted with a pressure gauge that displays the boiler pressure, if the machine is equipped with a digital display it will also indicate water temperature.

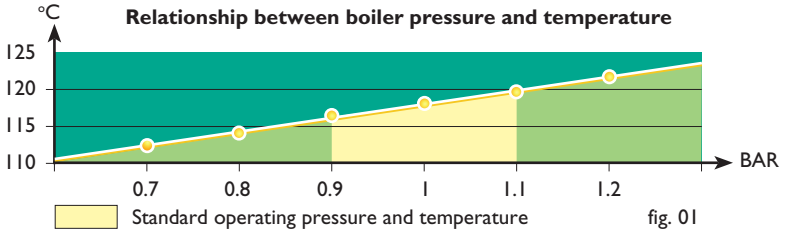

fig. 01

Starting the machine

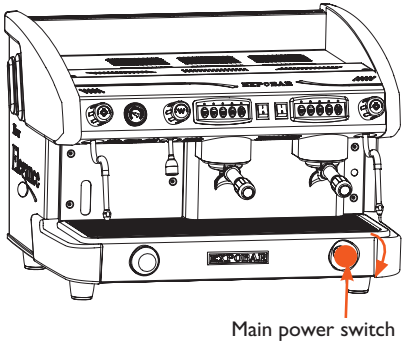

- Open the machine's water supply valve.
- Turn on the main power switch.
- Press a drink button at the control panel on each group, wait until water comes out continuously from each of them. This ensures that the heat exchangers in the machine are being correctly filled.
- Open the steam lever to release the air trapped in the boiler.
- The red lamp indicates that the boiler is heating. The lamp switches off automatically when the machine reaches operating temperature.
- The machine is now ready to use.

The porta-filter sets

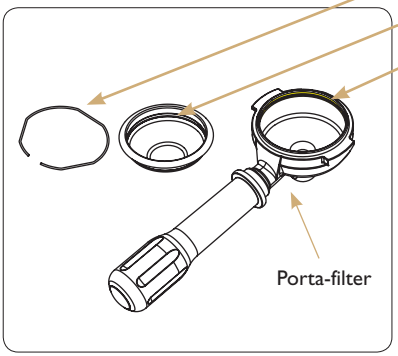

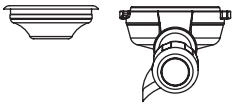

Porta-filter and filter basket for single espresso (7g)

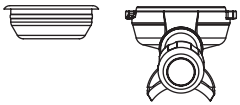

Porta-filter & filter basket for double espresso (14g)

Inserting the porta-filter into the group

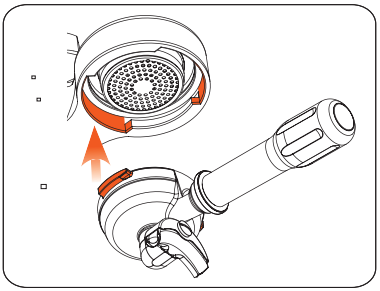

- Align the porta-filter's two flanges with the two slots in the group housing.

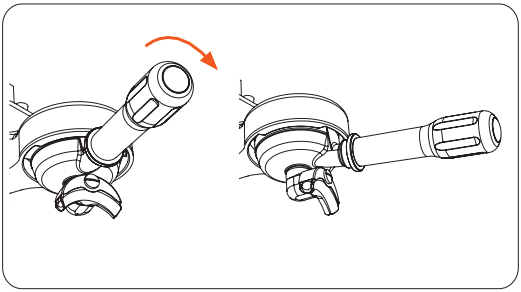

- Insert the porta-filter and rotate it counterclockwise until the handle is apporximately perpendicular to the face of the coffee machine.

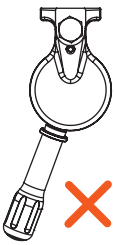

- Porta-filter not fully inserted.

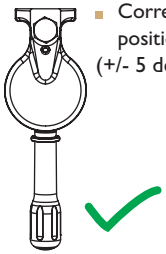

- Correct position. (+/- 5 degrees)

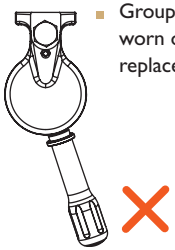

- Group gasket is worn out, please replace.

Espresso brewing

Important:
Always keep the porta-filter inserted in the group to keep it warm. This is important to maintain an optimal temperature when the espresso is dispensing.

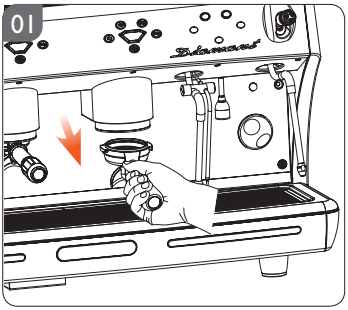

▲ Unlock and remove the porta-filter from the group head.

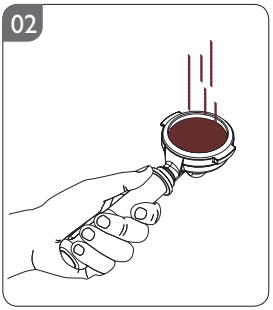

▲ Fill the filter basket with espresso-grind coffee (amount will differ depending on filter basket size). For best results use only freshly ground espresso beans.

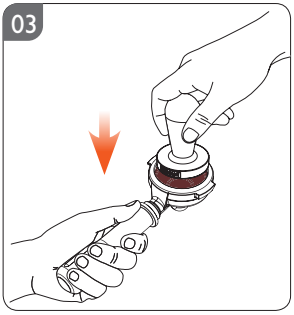

▲ Press the coffee with the coffee tamper.

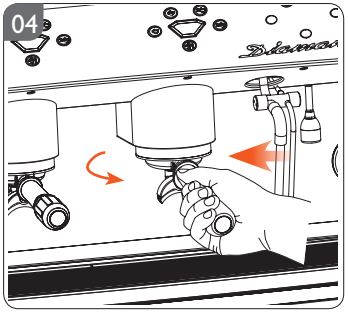

▲ Insert the filled porta-filter into the group head and lock it into the correct position.

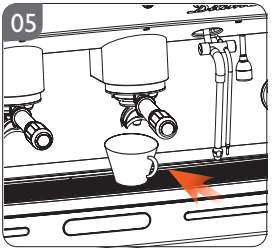

▲ Place the cup(s) under the porta-filter outlet(s).

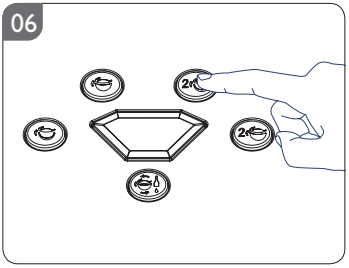

▲ Select the desired option from the drink buttons.

WARNING!
Never try to open the porta-filter while the machine is in operation! The pressurised hot water could cause scalding or serious injury. After dispensing has finished, wait at least 3 seconds before removing the porta-filter.

Steaming and frothing milk with the turbo steamer

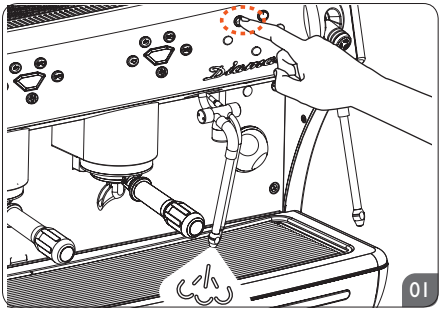

▲ Place the steam wand over the drip tray and open the steam lever for a few seconds to allow condensed water to be ejected. Close the steam lever when only steam comes out.

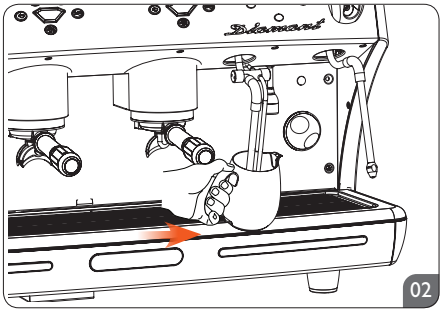

▲ Immerse the steam wand and termperature sensor into the milk pitcher, making sure the wand tip is submerged.

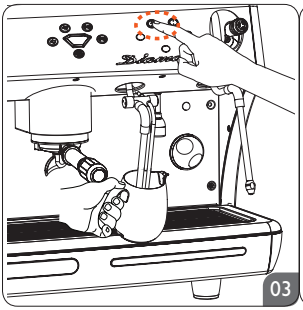

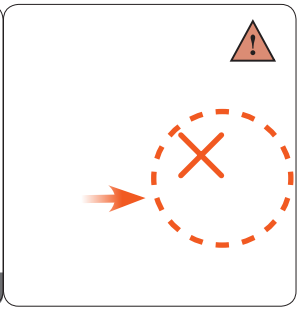

▲ Press the button again to begin steaming or frothing the milk. Do not remove the milk pitcher while steaming.

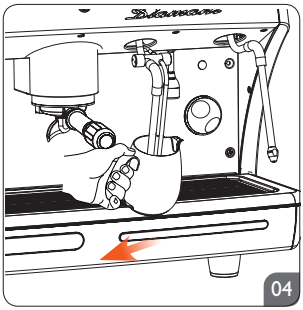

▲ Once the milk reaches the programmed temperature, the steaming will stop automatically and the pitcher can be removed.

WARNING!

Do not allow the steam wand to extend out of the milk when the milk is being steamed or frothed, it may cause serious burns and injuries.

▶ After the process is finished, position the steam wand over the drip tray and press the steam button once, allowing steam to flow for a few seconds to eject any milk remaining in the wand. Press the button agian to stop the steam and then wipe down the outside of the steam wand with a damp cloth to prevent nozzle blockage and to keep it clean. Leaving milk in or on the wand will affect the taste of later drinks.

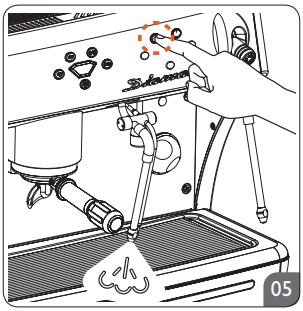

Hot water dispensing

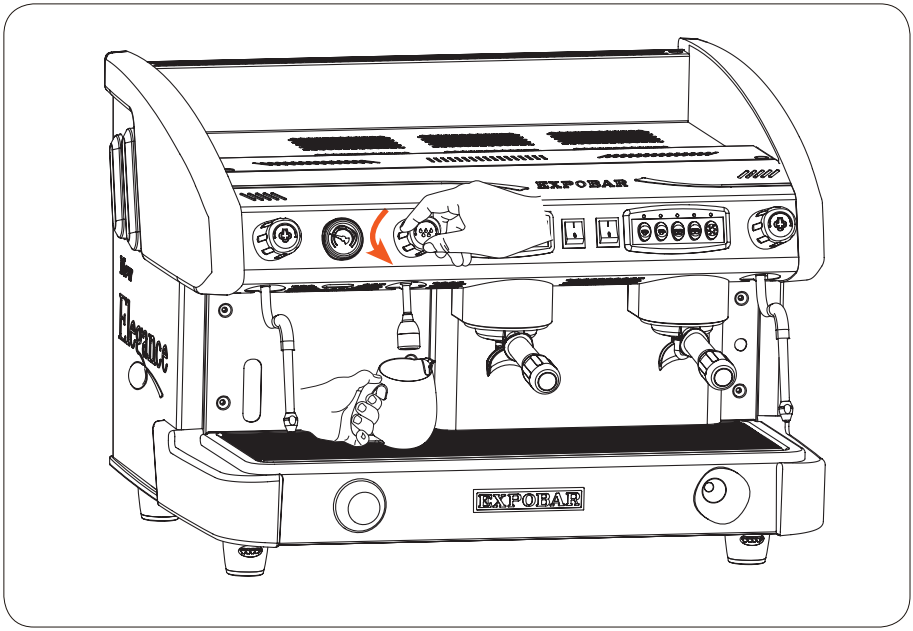

- Place a jug (or similar) under the hot water outlet.
- Open the hot water tap.
- Once the machine has dispensed the desired amount of water, close the hot water tap.

WARNING!

Never expose hands and fingers directly under the hot water outlet during operation to avoid scalding or serious burns.

Machine cleaning

Important:

- To keep the machine looking and working like new, you should always follow the cleaning and care instructions provided in this manual.
- Always turn off the main power switch when cleaning the exterior of the machine.
- All external surfaces should be cleaned with a damp, lint-free cloth that will not scratch the machine.
- Do not use aggressive cleaning detergents, solvents or degreasers. These can damage the surfaces, and plastic and rubber parts, and leave unwanted residue.

Important:

Each day, or 8 hours after dispensing the last coffee, the following cleaning tasks should be performed to maintain the quality and performance of the water system:

- Porta-filter: Brew one espresso with the filter empty (around one minute) to flush it out (dispose of this water).
- Steam Wand: Position the wand over the drip tray and open the steam lever for one minute to flush the wand.
- Hot Water Outlet: Place a container under the water outlet and open the lever for 20 seconds (dispose of this water).

Daily cleaning schedule

- Rinse each of the brewing groups, shower plates, and porta-filters with hot water for 15 seconds.
- Clean the external surfaces of the machine with a damp cloth, paying special attention to the stainless steel parts.
- Clean the steam wand and the water tap. Be sure that the nozzles are not clogged or partially blocked with milk or other residue. If it's necessary to remove them for cleaning, be careful not to deform or damage any of the components during removal.
- Clean the dip tray and the stainless steel insert grid under running water with a brush.
- Clean the drain cup by slowly pouring one liter of warm water into it to dissolve and remove the coffee residue that accumulates inside the drain cup and hose.

Weekly cleaning schedule

- Clean the brewing group and porta-filter with professional cleaning powder (page 21).

Cleaning the brewing group and porta-filter

- Unlock and remove the porta-filter from the group head.
- Place the blind gasket in the filter basket.
- Fill the blind basket with cleaning powder for espresso coffee machines.
- Lock the porta-filter into the group head.
- Activate the auto-cleaning program:

  When the machine is in idle mode, simultaneously press the Continuous  and 1 Short Espresso  buttons. After cleaning starts, release the buttons and the machine will automatically repeat the cleaning cycle 5 times until cleaning is completed.

WARNING!
Never try to open the porta-filter while the machine is in operation! The pressurised hot water could cause scalding or serious injury. After cleaning has finished, wait about 3 seconds before removing the porta-filter.

Important:
When the cleaning process is finished, remove the porta-filter and run water through the group again to rinse out any residue. Repeat the cleaning process this time without cleaning powder to remove any remaining residue. Store the blind gasket in a convenient location for future use.

Note:
- Rinse the group and porta-filter with hot water (using only the blind gasket and hot water, no cleaning powder) each day.
- Clean the group and porta-filter with cleaning powder once a week.

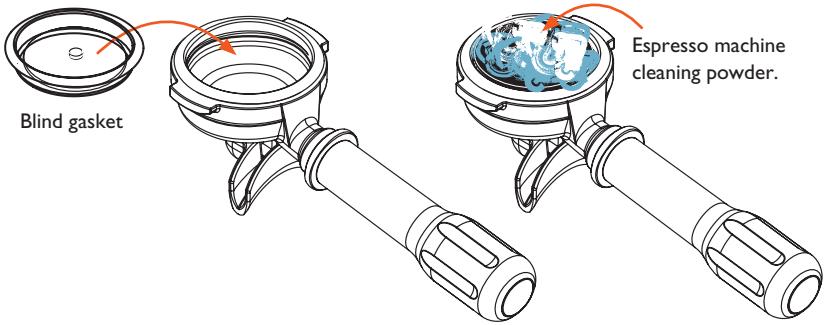

Note:
Only use professional cleaning powder designed specifically for espresso machines. It's avalible from the distributor.


Part no: 1104162

Cleaning the gasket and shower plate

Cleaning the gasket

While making espresso, coffee grounds will naturally accumalate on the group's sealing surface. Allowing an excessive amount of grounds to build up can prevent the the porta-filter from properly sealing to the group head. In extreme cases, such as leaving a used porta-filter in the group head for several days, water can even become blocked from passing through the shower plate.

To prevent these problems, perform the following cleaning procedures daily:

- Install the blind basket into the porta-filter without cleaning powder.
- Place the porta-filter loosely in the group head - do not close it fully.
- Press the Continuous button .
- Perform an opening-closing motion with the porta-filter in place without closing it fully. Water will flow over and around the porta-filter, passinging through the closing surface and washing out any coffee residue. Be very careful to avoid splashes, as this water is very hot and can cause burns.
- Press the Continuous button .again to stop the water flow.

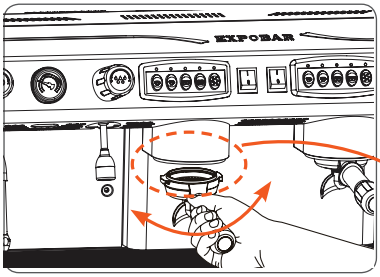

WARNING!

Take special care to avoid scalding when performing this cleaning operation, as the hot water used to clean the gasket will spill over the sides of the porta-filter.

WARNING!

Do not fully tighten the porta-filter. If fully tightened, high-pressure water may spray out and cause scalding or serious injury.

Cleaning the shower plate

- Remove the porta-filter from the group head.
- Clean the shower plate and group gasket with a soft brush to remove any coffee residue.

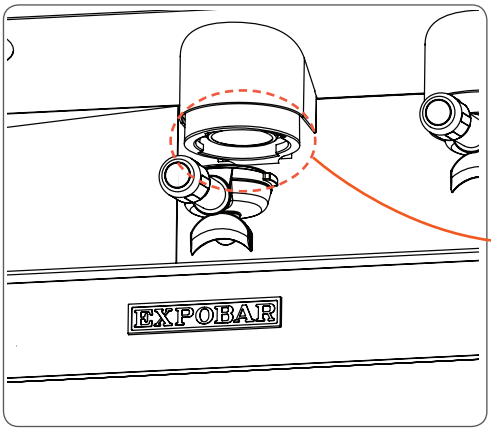

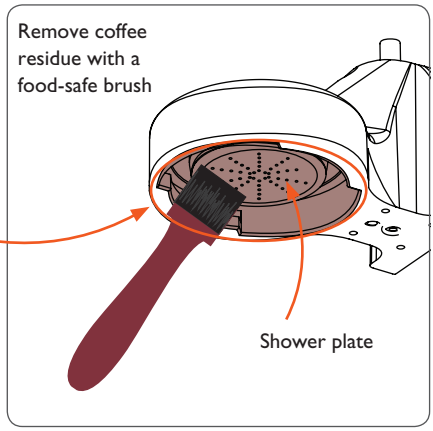

Additional handling of the machine

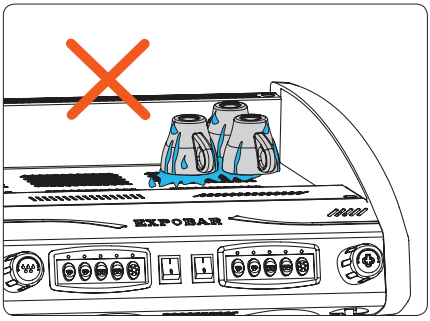

Important:
Do not place wet cups directly on the cup shelf. Allowing water to drip into the machine can cause mechanical and electrical damage.

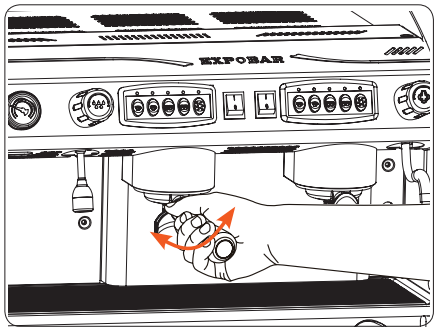

- Always remove and insert the porta-filters gently. Never use excessive force to try to close the porta-filter. If the porta-filter does not turn and lock into place without excessive force this usually indicates that there is too much coffee in the filter basket.

STORAGE AND DISPOSAL

Long-term storage

Before storage be sure to:

- Perform all weekly and periodic cleaning procedures described in this manual (see pages 16-20).
- Disconnect and roll up the power cord (this should be performed by a qualified person).
- Disconnect the machine's water inlet hose from the domestic water supply and drain the boilers (this should be performed by a qualified person).
- Clean the drip tray and exterior of the machine to remove any coffee or other residue.
- Cover / re-pack the machine in its original carton and store it in a dry place where it will not be exposed to extreme temperatures or humidity.
- When returning the machine to service after long-term storage, perform all weekly and periodic cleaning procedures before use.

Machine disposal and recycling

- Disconnect and roll up the power cord (this should be performed by a qualified person).
- Disconnect the machine's water inlet hose from the domestic water supply and drain the boilers (this should be performed by a qualified person).
- Pack up and ship/deliver the machine to a certified recycling center.



Buttons functions

Here is some of the additional functions that the electronics offers:

- Volume control of four different espresso drinks per brewing group.
- Time-controlled hot water dispensing. (if available)
- Automatic filling and level control of the boiler.
- Automatic switch off of the heating element if not enough water.
- System supervision through alarms.
- RS-232 serial interface with reader for connecting control panel and computer.
- Automatic cleaning of the brew groups.

The control panel is by default programmed with 4 standard drinks (these can be reprogrammed as you wish) and a continuous selection. The first four keys (1 short espresso, 1 Long Espresso, 2 short espresso, 2 Long Espresso) brew the programmed volume and then stop automatically, the fifth key brews continuously until user stops it by pressing button again.

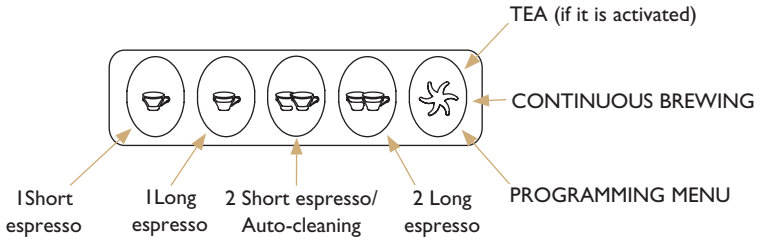

The Continuous Dispensing button performs 3 different functions (depending on length of time pressed):

Machines equipped with display

- Under 1 second: Enables automatic water- or steam-dosing (only on machines without manual taps).
- Between 1 and 8 seconds: Enables Continuous Dispensing (press again to disable).
- Over 8 seconds: Access coffee-dose programming menu (see below).

Machines not equipped with display

- Under 4 seconds: Enables Continuous Dispensing (press again to disable).
- Over 4 seconds: Access coffee-dose programming menu (see below).

Additonal button functions

To activate these functions, turn off the machine at the power switch then, while holding down the required button on the left-hand Drink buttons, turn the machine back on.

1 Short Espresso.	Enable electronic pre-infusion.
1 Long Espresso.	Disable electronic pre-infusion.
2 Short Espressos.	Perform auto-cleaning.
2 Long Espressos.	Turn on/off flashing of button lights (only for 2GR and 3GR machines without display control).

Note:
In machines equipped with a display, electronic pre-infusion may have to be enabled/ disabled from the service programming menu.

Programming the coffee dosage

Use the following steps to program the espresso brew dosages for each Brewing Group and Drink Button (each button can be programmed for a different dosing time if desired):

1. Place a Porta-filter filled with fresh espresso grounds in the Brewing Group.
2. On machines not equipped with a display, press the Continuous Dispensing button for 4 seconds. On machines equipped with a display, hold down the Continuous Dispensing button for 8 seconds. The Continuous Dispensing button light will flash. On machines equipped with a display, all of the Drink buttons lights will be turned on.
3. Within 30 seconds press the Drink Button to be reprogrammed. All of the button lights will turn off except for the Continuous button and the one being programmed. Water will begin to flow and espresso will begin dispensing.
4. Allow the beverage to dispense until the desired drink volume is reached, then press the Drink Button that is being programmed to stop the water flow. This dosage time will now be stored as the default for that Drink Button.
5. Repeat Steps 1-4 for all Drink Buttons to be reprogrammed.

If you only need to reprogram one of the dispensing options, follow the steps above and program just that buttonn. All of the other dispensing options will remain unchanged (default settings).

Important:
Use a porta-filter filled with fresh espresso grounds for every new brewing dosage that is programmed.

Note:
Programming any of the options on the left-side bank of Drink Buttons (when viewing the machine from the front) automatically programs the dosages on all of the other corresponding Drink Buttons for the other Brewing Group(s). Always program the left-side buttons first, then program the other Drink Buttons to the right afterward to store their specific dosages.

Note:
For safety and water conservation, all brewing settings have a maximum dispensing time of 5 minutes.

Programming the turbo steamer temperature

- Press the Continuous button for 8 seconds, all the lights in the keypad will light up and Continuous button will flash, the display will read "Doses Programming Select 30s".
- Immerse the steam wand in the milk to be steamed or frothed.
- Press the Steam button . The programmed temperature will appear on the digital display.
- When the liquid reaches the desired temperature, press the Steam button again to stop steaming. The new temperature is now stored.

Note:
The electronic temperature probe is designed to automatically stop the steam when the programmed temperature is reached. Steaming times with the Turbo Steamer will vary depending on the volume and temperature of the liquid being steamed or frothed, but final temperature will be the same.

Machine status

Machines equipped with a display include the following additional functions:

- Automatic daily on/off timer (stand-by function).
- Clock settings (current time and date).
- Promotional display.
- Number of coffees/infusions dispensed.
- Digital boiler-temperature display and control.
- PID-technology boiler-temperature control.
- Programming and settings help system.
- Visual water-softener regeneration alarm.
- Display language selector.

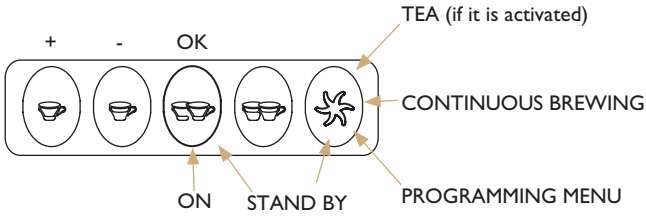



fig. 04



fig. 05

The coffee machine has 3 possible statuses:

- **On:**

  The machine is operational and ready to make coffee. This is the usual machine status after turning on the power switch (see fig.04).

- **Stand-by:**

  The power switch is on, but the display shows "OFF" (see fig.05). This means that the machine is in energy-saving mode. This mode is only entered whilst the machine is on. To enter this mode, press the Continuous dispensing button and, without releasing it, simultaneously press the 2 Short Espressos button. To exit this mode and turn the machine back on, press the 2 Short Espressos button again.

- **Off:**

  The coffee machine is turned off at the power switch.

Accessing the second menu level

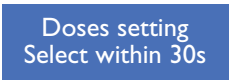

fig. 06

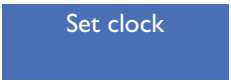

fig. 07

- With the machine on, press the Continuous Dispensing button on the Left-hand drink buttons and hold it down (for over 8 seconds) until the dose-programming menu is displayed. All the drink buttons lights will be turned on and the Continuous Dispensing button light will flash. The display will be as shown in fig. 06.
- Hold down the Continuous Dispensing button until the menu displays the "set clock" option (see fig. 07).

This provides access to the second menu level.

Setting the clock: hours, minutes and day

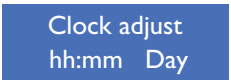

fig. 08

- To set the clock, press the 2 Short Espressos button whilst the "Set clock" message is displayed.
- The hours values will start flashing. Increase/decrease the values by pressing the 1 Short Espresso and 1 Long Espresso buttons (see fig. 08).
  With the desired value is reached, accept it the pressing the 2 Short Espressos button .
- The minutes digits will now start flashing. Increase/decrease the values by pressing the 1 Short Espresso and 1 Long Espresso buttons.
  With the desired value is reached, accept it the pressing the 2 Short Espressos button .
- Set the day of the week in the same way (, and).

After setting the values, pressing the 2 Short Espressos button accesses the Auto On/Off menu.

Auto On/Off



fig. 9

- After accepting the changes made in the "set clock" menu, pressing the 2 Short Espressos button accesses the coffee machine's auto on/off programming menu (see fig. 09).
- To change the auto on/off time, increase/decrease the values (hours) using the 1 short espresso and 1 Long Espresso buttons whilst the values are flashing. When the desired value is reached, press the 2 Short Espressos button to accept it. Set the values for the minutes in the same way(, and).

Note:
By default, this setting is set as: On: - - : - - (indicating that the function is disabled). Changing the value to anything other than - - : - - enables the function. To leave this function disabled, press the 2 Short Espressos button whilst the value selected is - - : - -.



fig. 10

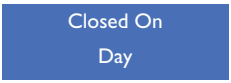

fig. 11

- Whilst the auto off time is flashing, increase/decrease the values by pressing the 1 short espresso and 1 Long Espresso buttons. When the desired value is
  Reached, press the 2 Short Espressos button to accept it.
  The minutes values will start flashing. Set these values in the same way as described above (, , and). After accepting the time, the next menu will be displayed.
- If auto on/off is enabled, it will also be possible to set a day on which the machine will not be turned on automatically. This option will not be displayed if auto on/off is disabled.
- To set the day off (see fig. 11), Increase/decrease the values by pressing the 1 short espresso and 1 Long Espresso buttons. When the desired value is reached, press the 2 Short Espressos button to accept it.

Note:
By default, this setting is set as: On: --------- (indicating that the function is disabled). Changing the value to anything other than --------- enables the function. To leave this function disabled, press the 2 Short Espressos button whilst the value selected is ---------.

Counters

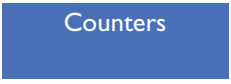

fig. 12

- To access the counters menu, go to the start of the second menu level (see fig. 07).
- Briefly press the Continuous Dispensing button to display the "counters" option (see fig. 12).
  The machine has the following 4 counters:
- Litres: volume of water dispensed by the machine (indicator used for descaler maintenance cycles).
- Service: number of coffees dispensed (indicator used for servicing).
- Number of coffees/infusions dispensed.
- Number of coffees dispensed per button.

Flow meter Gr. X	Fault in flow meter X / Flow fault detected in counter X
Time-out alarm Boiler filling up	Check that the machine is receiving water.
Probe unconnect	Temperature sensor fault
Service 999999999	Service the machine. To disable the alarm and reset the counter: Turn off the machine. Simultaneously press and hold down the 1 Short Espresso  and 1 Long Espresso  buttons. Turn on the machine.
Change filter 999999999	Regenerate the filter. To disable the alarm and reset the counter: Turn off the machine. Simultaneously press and hold down the 2 Short Espressos  and 2 Long Espressos  buttons. Turn on the machine.

- If boiler filling time exceeds the programmed time (2 minutes), all of the Drink buttons lights will flash and the machine will be disabled. To re-enable it, turn the machine off and on again at the power switch.
- If the electronic control panel does not receive a pulse from the flow meter (coffee too fine or flow meter fault) within 5 seconds of pressing one of the espresso buttons, the light for the dose selected will start to flash. To disable it, press the dose button again.
- As an additional safety, all dose settings have a maximum dispensing time of 5 minutes.

The following checks can be carried out by users once the machine has been turned off and disconnected from the power supply. For all other non-specified machine faults, disconnect the machine from the power supply and immediately contact authorised and qualified service personnel.

Problem	Possible cause	Solution
The machine does not start up	The plug is not correctly inserted into the power socket	Check that the plug is correctly inserted and that the power socket is operational.
	The circuit breaker and/or differential are disconnected.	Check that they are connected.
	The cable and/or plug are damaged.	Call service personnel to replace them.
The steam wand does not dispense steam	The steam wand is clogged by milk	Clean the wand and, if necessary, remove the nozzle and unclog it using a pin or needle.
Water is found underneath the machine	The drainage tube is blocked.	Clean the drainage tube.

Faults produced by limescale	
Coffee not dispensed at right temperature:	Heat-exchanger outlet pipes clogged by limescale.
Brewing groups do not dispense water:	Water system is clogged by limescale.
90% of faults are due to limescaling inside the coffee machine (due to not softening the water). To avoid these faults, maintain the water softener regularly.	

Coffee-grinding problems	
Coffee dispensing is very fast:	The coffee grinding is too coarse. Adjust the coffee-grinding setting.
Coffee dispensing is very slow:	The coffee grinding is too fine. Adjust the coffee-grinding setting.

For the warranty to be valid the conditions for maintenance must have been followed according to our instructions, proper precautions have been taken, and warranty claim has been issued without delay.

The affected equipment shall not be used while awaiting service if there is any risk that the damage or defect could worsen.

The warranty shall not cover consumable supplies such as glassware, or normal maintenance such as cleaning of filters. Additionally, damages of an external nature, such as contaminants in the water, limescaling, incorrect voltage or power surges, and water supply issues such as pressure changes or service disconnection are not covered by this warranty.

The warranty will not cover damages or defects caused by incorrect handling or operation of the appliance.

FOR SERVICE

Please contact your dealer

Your dealer

crem®
INTERNATIONAL

www.creminternational.com
Address of CREM international Shanghai:
Building 5, No 521-551 KangYi Road, Pudong New Area, Shanghai, China
Address of CREM international Spain:
C/ Comerç nº 4 – Pol. Ind. Alcodar – Gandía (Valencia – Spain)

MADE IN SPAIN