BRAVILOR®
BONAMAT®

Operating instructions GB

HOT WATER BOILER



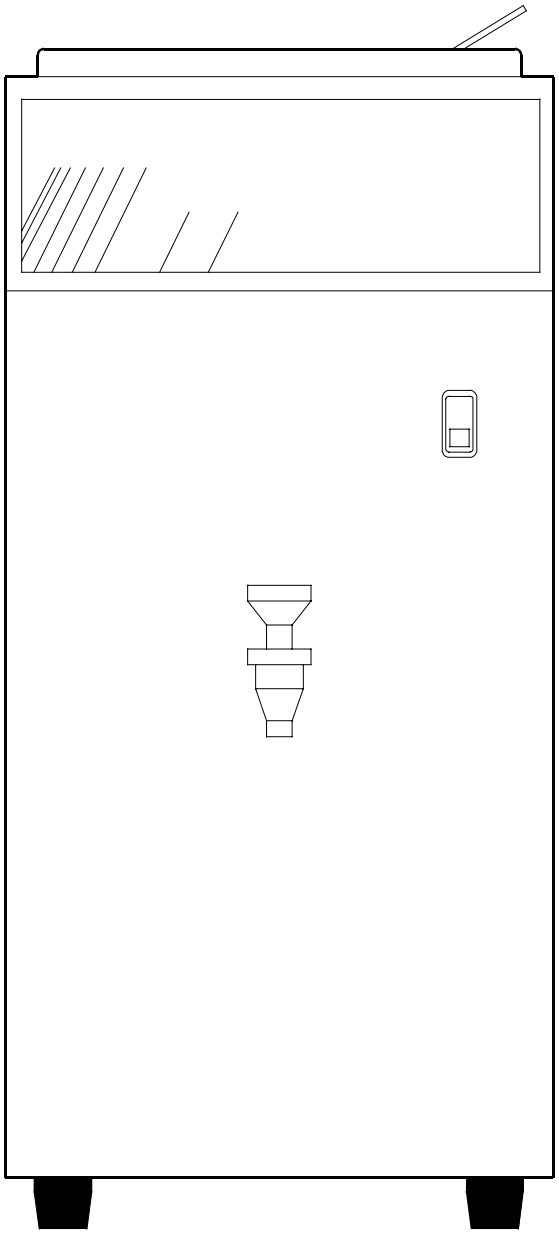

HWA 20

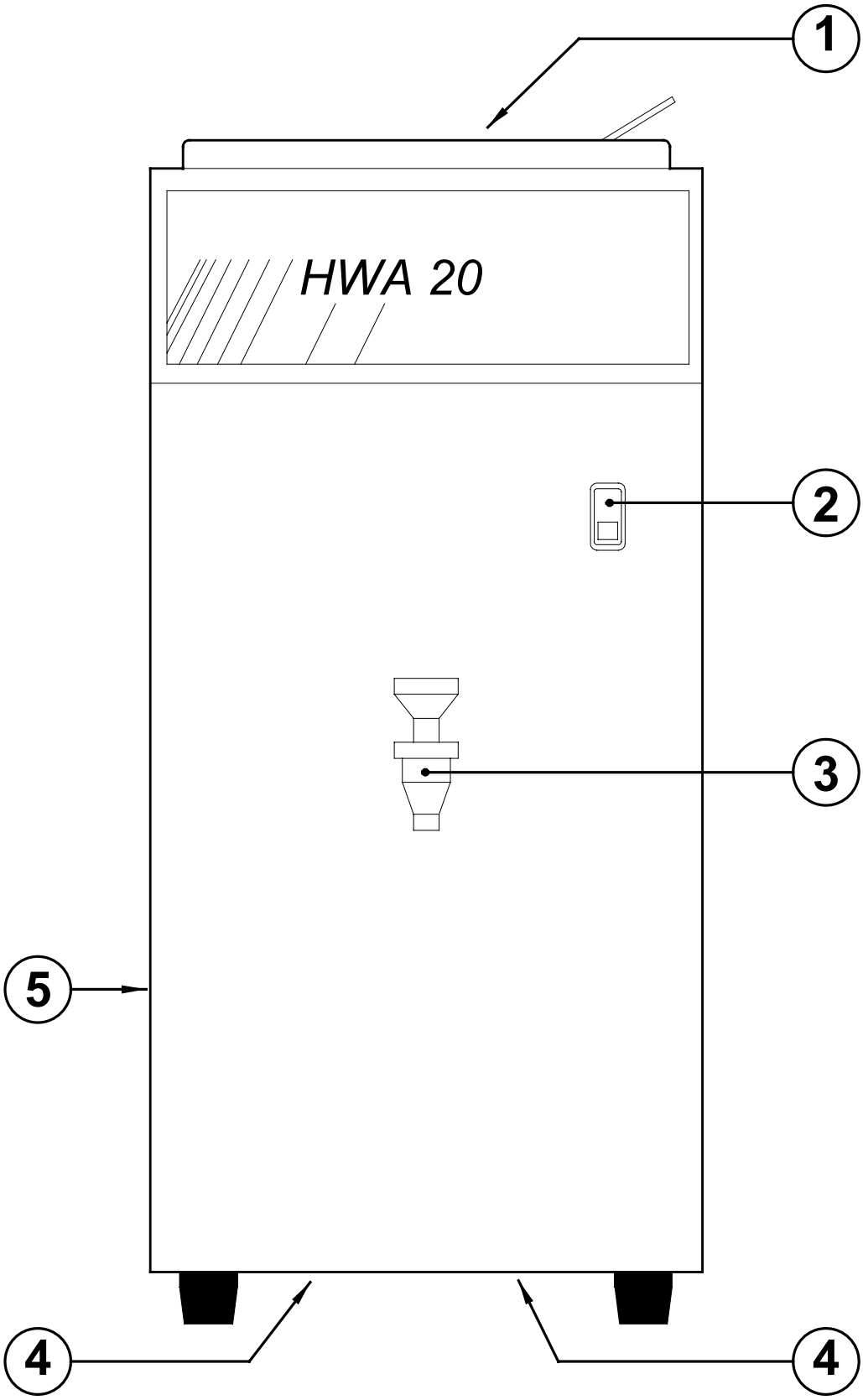

Fig. 1

OPERATING INSTRUCTIONS (ENGLISH)

To operate this appliance properly and safely, read the following instructions carefully.

INTRODUCTION

This appliance, model HWA 20, is a water boiler with connection to the water mains and can be used to heat water to fill a cup, a jug, etc.
When you push the on/off switch the water will heat.
Once the water in the dispenser is at the correct temperature, the temperature of the water drawn off will always be correct when the dispenser is being used normally. The reservoir is only refilled when all the water present is at the desired temperature. When the temperature drops too far as a result of additional cold water, the refilling procedure is stopped. The water is first heated before proceeding further.
Should the water boiler threaten to overflow, a safety relay will switch the entire system off.
Figure 1 shows the main components and controls.
Figure 2 shows the appliance's dimensions.

Figure 1:

1.Lid, hot water reservoir
2.On/off switch
3.Tap
4. Electrical and water connections
5. Temperature setting

The following accessories are supplied with the appliance:

- Drip tray
- Water reservoir lid
- Connecting hose, length ± 1.2 m.
- Screwdriver
- 1 Sachet RENEGITE (descaler)

Technical data

Model	: HWA 20
Water reservoir capacity	: 4.5 l.
Capacity	: 18 l/h
Discharge capacity	: 3 litres
Minimum water pressure	: 0.5 bar
Maximum water pressure	: 10 bar
Water connection	: via hose with G 3/4" unions
Cord length	: ± 150 cm
Supply voltage (50/60 Hz)	: 220-..-240V≈
Rating	: 1900-..-2260W
Protection	: 16 A

Warning !
For safe operation of the water boiler, pay close attention to the following points:

1. When the appliance is in operation, some components will get very hot.
2. If the appliance is unused for a long period of time, it is advisable to disconnect the electricity and close the water supply.
3. Under normal circumstances, a small quantity of water always remains in the appliance. Please keep this in mind if it is to be exposed to temperatures below 0° C.
4. Stay with the appliance during maintenance operations (such as descaling).
5. When working with strong cleaning or descaling agents, it is most advisable to wear safety goggles (face protector) and gloves.
6. Never immerse the appliance in water.
7. After working with strong cleaning or descaling agents, be sure to wash your hands.
8. Make sure that all repairs are carried out by qualified technicians.
9. When the appliance has to be opened for repairs or maintenance, be sure to disconnect the electricity.
10. The appliance must always be connected to the mains in such a way that it can be easily disconnected.
11. The appliance should be connected to the water mains with the hose attached to a hand-operated tap.
12. The appliance must be earthed.
13. Be sure to observe local regulations and standards when installing the appliance.
14. Prevent spillage of the descaler solution on to the outside of the machine, this can cause permanent damage to the exterior surface of the machine housing. In the event of a spillage, wipe area affected dry, whilst observing the safety regulations as given in the Users Instructions. Directly afterward the area must be cleaned thoroughly.

INSTALLATION AND INITIAL OPERATING PROCEDURE

When installing the appliance, keep the instructions given in the **INTRODUCTION-warning (points 10 through 13)** in mind.

Installation
Position the appliance on a solid level base where it can be easily connected to the electrical and water mains.

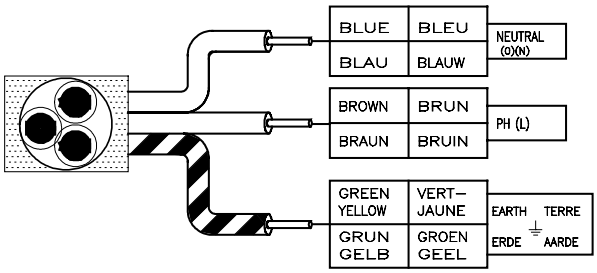

Fig.3 (220V 1 phase with plug connection)

Please take note of the following in regard to figure 3:

- If equipped with a fuse plug, the appliance must be protected with a 13 A fuse.
- If another plug is installed, the appliance must be protected with a 15 A fuse.
- If the plug supplied with the appliance does not fit into your socket, it should be cut off and replaced with a new plug The old plug should then be disposed of, as it can be dangerous if inserted into a socket.

Keep the following instructions in mind when installing a new plug:

- The yellow-green core (earth) must be connected to the terminal marked with the letter E or the earth symbol (⏚) or coloured green or yellow-green.
- The blue core (neutral) must be connected to the terminal marked with the letter N or coloured black.
- The remaining brown core (live) must be connected to the terminal marked with the letter L or coloured red.

Important !
The triple-core supply cord in fig. 3 is colour-coded as follows:

Green and yellow	- earth
Blue	- neutral
Brown	- live

Initial operating procedure
The following procedure is to be carried out when operating a new appliance for the first time:

1. Clean the inside of the reservoir carefully with a damp cloth.
2. Switch on the appliance (switch 2, fig. 1) and make one full reservoir of hot water.
3. Then the hot water can be drained.
4. Empty the water via the drain cock and dispose of it.

The appliance is now ready for normal use.

Adjustment
Using the screwdriver supplied, the hot water temperature can be adjusted on the left side of the appliance. For a higher temperature, turn the screwdriver to the right. For a lower temperature, turn the screwdriver to the left.

CAUTION !
Adjust the temperature only when the reservoir has been filled up to the next to the highest electrode. The water in the reservoir should not be allowed to boil.

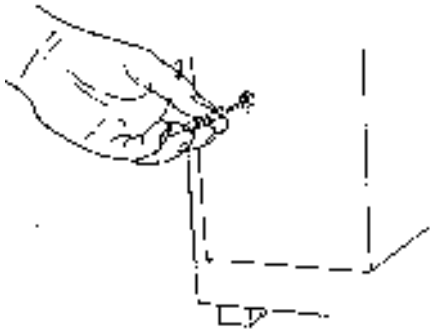

Fig. 4

OPERATION
Set switch 2 (fig. 1) in the on position.
The water boiler will now be filled automatically and the water will be heated to ca. 95 ◦C.

Hot water can now be drawn out of the tap. When the water level in the reservoir falls, it will automatically be refilled step by step and the water will be heated.

MAINTENANCE

Warning !
Always stay with the appliance during maintenance tasks (such as descaling or cleaning) and keep the instructions given in the **INTRODUCTION-warnings (points 4 through 9 and 14)** in mind.

Cleaning
The appliance can be cleaned with a damp cloth. The drip tray, etc., can be washed in the usual way.

Descaling
Under normal operating circumstances, calcium deposits will appear in the appliance. The appliance must be regularly descaled in order to function properly. When the system has switched itself off, it is most advisable to give it a really good descaling.

Pay special attention to removing the calcium deposits from the two highest electrodes. (Scrape them off with a small knife.)
For descaling purposes we advise RENEGITE, a descaling agent which we have tested ourselves. The following instructions are based on the use of one 100 gr. sachet or two 50 gr. sachets of RENEGITE (read the instructions on the packet as well).

The descaling procedure is as follows:

1. If the system is switched OFF and the water is cold, drain off as much water as possible via the hot water tap.
2. If the system is switched ON it must be switched off and as much hot water as possible drained. Cool the system by pouring 3 litres of cold water into the reservoir and draining it off again.
3. Dissolve 100 gr. descaling agent in ± 0.5 litre lukewarm water.
4. Pour the solution carefully into the hot water reservoir.
5. Switch on the appliance again.
6. When the reservoir has been filled up to the next to the highest electrode, wait ten minutes.
7. Meanwhile, draw off a cup of descaling solution every minute from the usual hot water tap (thereby giving the tap a good descaling as well.)
8. Switch off the appliance once the ten minutes is up and draw off as much solution as possible via the usual tap.
9. Then pour ± 3 litres cold water into the reservoir (to cool the system quickly).
10. To drain the reservoir quickly, the entire appliance can be carefully tilted.
11. Now pour ± 5 litres of water into the reservoir. Make sure it doesn't overflow.
12. Drain as much water as possible via the usual hot water tap and dispose of it.
13. Then drain the reservoir entirely according to instructions 10.
14. Dispose of the water and repeat operations 11 and 12 at least twice, but now with ca. 4 litre water.
15. Switch on the water boiler.
16. Before using the hot water for consumption, it is advisable to rinse the tap well once more by first drawing off another litre or so of hot water via the hot water tap.

Important:
If you do not use the step 10 to empty the entire reservoir, the 4 litre rinsing procedure has to be repeated more often before the machine is switched on for normal use again. See the last 3 instructions for the descaling process.

CAUTION !

- Leave the reservoir uncovered during the entire descaling process.
- Prevent the descaling agent from touching the top electrode.
- Due to the violent reaction which occurs when the descaling agent comes into contact with the calcium deposits, the water may touch the topmost (safety) electrode, thus switching off the system. In that case, switch the system off manually using switch 2 (fig. 1). Wait ca. 20 seconds and switch the system on again in order to continue the descaling process.

(SUBJECT TO MODIFICATION)

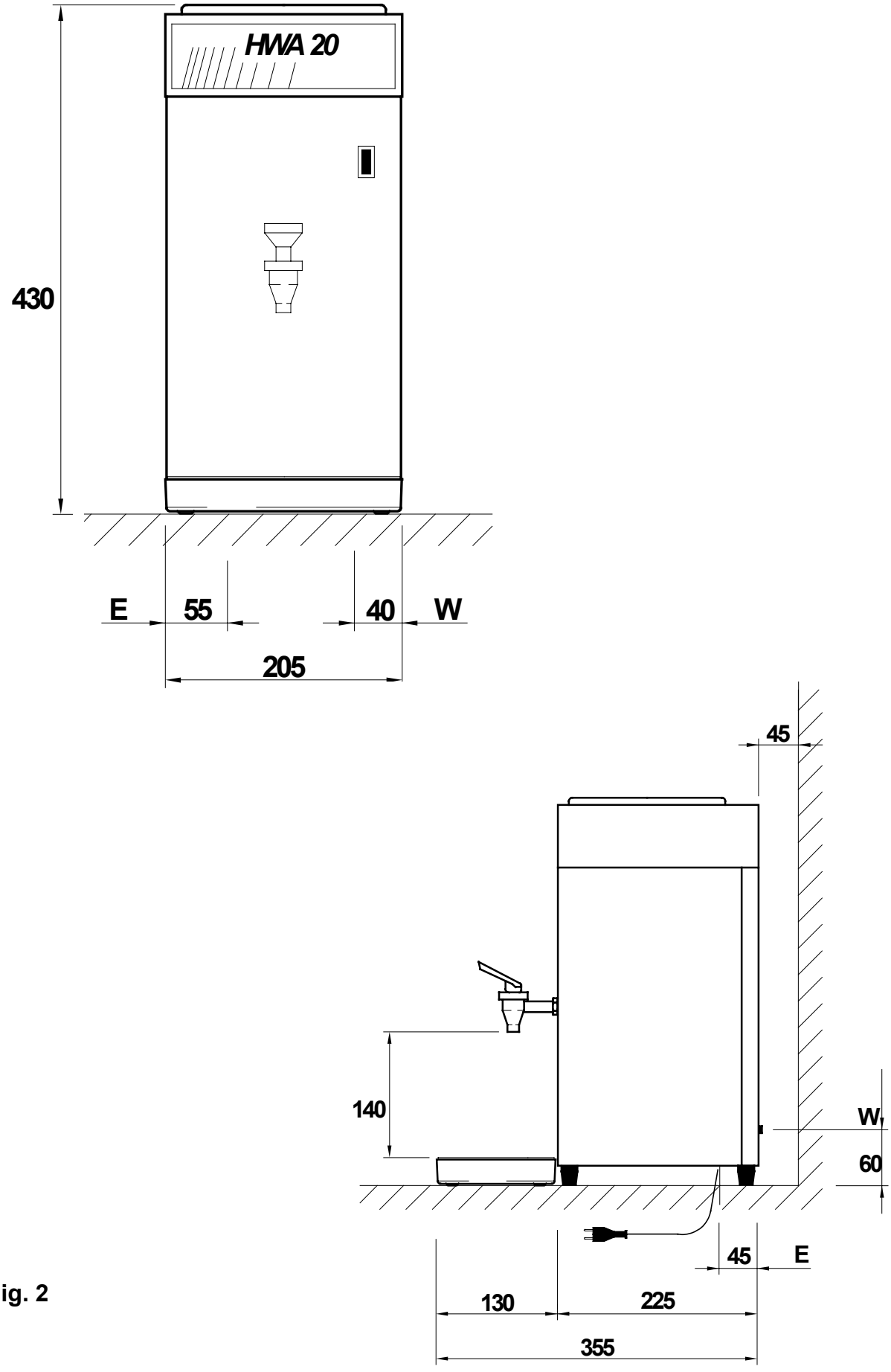

Fig. 2

BRAVILOR®
BONAMAT®

COFFEE BREWING MACHINES

© 10-1997

700.403.118 E

