Operating Instructions
Kenia



MAHLKÖNIG
The professional art of grinding
since 1924

Table of Contents

1. Safety **4**
1.1 Symbols 4
1.2 Safety Instructions 4
1.3 Purpose of Use 5
1.4 User Requirements 5

2. Technical Data **5**

3. Description **6**

4. Safety Devices **7**

5. Set-Up and Basic Adjustment **7**
5.1 Setting-up area 7
5.2 Installation 7
5.3 Initial operation 7

6. Operation **8**

7. Operating Faults **8**

8. Recalibration of the Grind Adjustment **10**

9. Cleaning **10**
9.1 Cleaning with GRINDZ™ Grinder Cleaner 11
9.2 Cleaning of the Grinder Casing 11
9.3 Cleaning of the Grinding Mechanism 11

10. Maintenance and Repair **12**

11. Spare Parts **12**

12. Certificate **13**

13. Warranty Conditions **13**

1. Safety



Please read and observe the following operating instructions carefully. Non-observance can result in damage to the device as well as in health-threatening risks for the user.

1.1 Symbols

The following two symbols are used in this manual of operating instructions:



Safety instruction:
In case of non-observance, extreme risk of accidents exists.



General instruction:
In case of non-observance, the device can become damaged or optimum operation not be guaranteed.

1.2 Safety Instructions

The grinder you have purchased is only allowed to be used to grind whole coffee beans or the unground material for which the grinder has been set up for. Ground materials are never allowed to be filled into the hopper.

Do not carry out any modifications or changes on the grinder. In case of non-observance, the manufacturer shall be liable for resulting damage in no case whatsoever.

Always pull the power supply plug out of the outlet before carrying out any maintenance or cleaning work on the grinder.

Never put the grinder into service with a defective power supply cable. Check the grinder regularly for any signs of damage on the power supply cable, plug, finger protector, etc.

Any repairs that may be required are only allowed to be carried out by experts. Please contact an authorised customer service centre, your local dealer or us directly as the manufacturer.

Do not exceed the permissible maximum operating period of 40 minutes. Afterwards, allow the motor to cool off for approx. 30–40 minutes.

When unpacking the grinder, please check to determine whether the power supply voltage (volts) corresponds to the grinder voltage on the rating plate.

Children do not recognise the risks that may arise when handling electrical grinders; therefore never leave children alone with electrical grinders without proper supervision.



Never immerse the grinder in water and do not operate it with wet hands.

1.3 Purpose of Use

The grinder you have purchased is **only allowed** to be used to grind the material for which the grinder has been designed. Please compare the information on the rating plate with the title page.

1.4 User Requirements

No special requirements are specified for the users of this device. It is, however, assumed that this manual of operating instructions has been carefully read and understood and that all instructions provided in this manual will be observed. In addition, working with the device on a safety-conscious basis is also expected.

2. Technical Data

Description	Kenia (K32/20, K32/10)
Voltage / Frequency	230V / 50Hz 115V / 60Hz
Rotation 50 Hz 60 Hz	 2850 rpm. 3400 rpm.
Sound emission Idel operation Operation	 65 dB 85 dB
Pre-fuse	16 A-slow
Overload circuit breaker 230V 115V	 7A T 12A T
Permissible max. Operating time of the grinder	40 minutes ON 100 minutes OFF
Dimensions in mm	W 220, D 330, H 620
Dimensions in inch	W 8.6, D 13.0, H 24.4
Net weight	18 kg (39.7 lbs)
Hopper capacity	500 g (1.1 lbs)

(Please ask the manufacturer or dealer for technical data on other voltages and frequencies.)

3. Description

The main components and operating elements are shown in the figure.

Pos. 1	Hopper with lid
Pos. 2	Grind adjustment
Pos. 3	Spout
Pos. 4	Bag holder
Pos. 5	Tray for residues
Pos. 6	Reset button (back)
Pos. 7	On / Off-Switch
Pos. 8	Bag holder handle
Pos. 9	Casing with motor and grinding mechanism

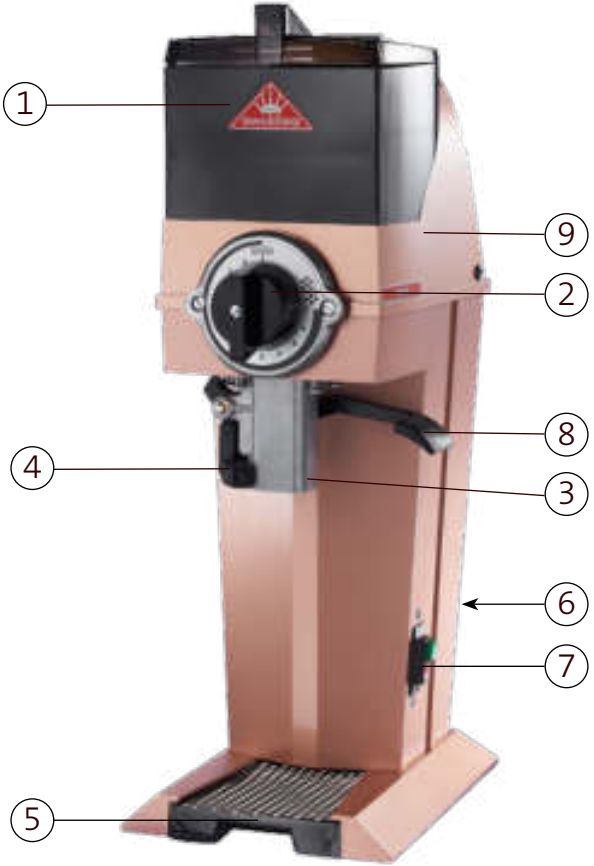

4. Safety devices

Thermal overload circuit breaker
The motor of the grinder is protected by an overload circuit breaker, which interrupts the electric circuit of the motor when the device is subjected to electric overloading. To be able to re-start the grinder, the reset button on the back side of the casing must be pressed (Pos. 6).

The user has no influence whatsoever on this operation. In case of repeated tripping of the circuit breaker, an expert must be consulted since this could cause damage to the motor winding.

Motor protector (winding shield) (only 115V / 60Hz)
The grinder is protected against thermal overloading by a motor protector (thermostat, inserted in the winding). Whenever the winding of the motor heats up to an impermissible level, the motor protector interrupts the electric circuit of the motor.
Following a cool-off phase (at least 100 minutes), the motor protector is switched on again automatically and the grinder can be re-started

Finger protector / Magnet holder
A combined finger protector / magnet holder is fitted in the hopper of the grinder. It is supposed to prevent the user from reaching into the running grinding mechanism. At the same time, it also prevents ferrous foreign objects from getting into the grinding mechanism. Every now and then you should clean the magnet since adhering foreign objects could be hanging from the magnet.

Never remove the finger protection!

5. Set-up and Basic Adjustment

5.1 Setting-up Area
Place the grinder on a level surface free from vibration.

Never operate the grinder in moist, or even worse, in wet surroundings.

5.2 Installation
You have received your grinder in operating condition. Now you only need to connect it to a power supply system. Proceed as follows:

Protect your device with a separate pre-fuse (not included in the scope of supplies) according to the information provided in para. 2 „Technical data".

Make sure that the pre-fuse is not overloaded by other consuming devices (e.g. fan-forced heaters, deep freezers).

Determine whether the mains voltage and frequency correspond to the information on the rating plate.

Insert the plug into the available grounded outlet.

5.3 Initial operation
A grinding test run is carried out on each grinder in the manufacturer's factory. This is why you may find ground material residue in the grinding mechanism!

Therefore clean the grinder before the first operation with the enclosed grinder cleaner GRINDZ™. Follow the manual on the instruction leaflet.

6. Operation

1. By moving the rotary knob, set the required grind degree (to the left for coarse coffee powder, to the right for finer coffee powder).

2. Only fill unground materials, for which the grinder is set up for, into the hopper. Close the hopper.

3. Press down the handle of the bag holder (pos. 8) and push the completely opened bag, which has been smoothed along the folds, over the spout (pos. 3). Let go of the handle and the bag is held firmly in position.

4. Now you can switch on the grinder. Knock the base of the bag a number of times whilst grinding. This allows the maximum capacity of the bag to be used.

5. When all the coffee has run through hold the base of the bag loosely in one hand and with the other press the handle of the bag holder and allow it to knock against the spout 2 or 3 times. This removes any ground coffee powder which may still be attached to the inside of the spout.

6. Now switch off the grinder and remove the filled bag from the spout.

7. Operating faults

Defect	Cause	Remedy
The grinder hums but does not grind.	The spout is clogged.	Set grinding fineness to „coarse“ and trigger the grinding process. The grinder will then grind itself free. Afterwards, return the setting to the desired grinding fineness.
	Grinding is set too fine.	Turn the grinding fineness setting to the right, to „coarse“, and trigger the grinding process. The grinder will then grind itself free. Afterwards, return the setting to the desired grinding fineness.
	A foreign object is in the grinding mechanism.	Clean the grinding mechanism as described (in para. 9.2) and remove the foreign object. Observe the safety instructions!

Defect	Cause	Remedy
The grinder does not start.	The power supply plug is not inserted.	Insert the plug into the outlet.
	The overload circuit breaker has been tripped.	Check to determine whether the reset button of the circuit breaker has jumped out. Press the reset button in again if appropriate. In case of repeated tripping of the circuit breaker, contact your authorised customer service centre or dealer.
	The motor protector was tripped.*	Give the grinder a cooling-off break of at least 100 minutes (para. 4).
	The pre-fuse was tripped.	Check the pre-fuse. Restore the pre-fuse to its initial state or replace it. Determine whether other consuming devices are also connected to this fuse.

Defect	Cause	Remedy
Grinder rotates but without grinding.	Carrier breakage.	Remove the grinder casing cover, take out the broken pieces of the driver, insert a new driver and then install the grinder casing cover again.
	Metal parts on the hopper magnet obstruct the incoming flow of material to be ground.	Clean the hopper magnet.

*115V / 60Hz only

In case of other malfunctions or continued faults, please contact your dealer or your authorised customer service centre.

8. Recalibration of the Grind Adjustment

The grinder has been precisely adjusted by the manufacturer. However, if the ground material is no longer fine enough after a longer period, the grinder must then be re-adjusted according to the following procedure:

1. Use a screwdriver to unscrew the fastening screw in the middle of the rotary knob and remove the rotary knob.

2. Switch on the grinder.

3. Then rotate the exposed adjusting spindle (see Fig.) very carefully and slowly in clockwise direction until a slight rattling noise (contact of the grinding discs) can be heard and then rotate the adjusting spindle immediately back again in anticlockwise direction up to the next notch. It must no longer be possible to hear a rattling noise of the grinding discs!



4. If you grind some beans now, you should get fine grains. If the coffee beans have been ground too fine, the discs can stick together. The grinder would be blocked.

5. If the adjustment you have made does not come up to your expectations you can adjust the grind degree as described above.

6. Place the rotary knob on the adjusting spindle so that the arrow of the knob is positioned precisely on the symbol „fine“. Clockwise rotation must no longer be possible.



It is important that the rattling sound cannot be heard in the finest grinding position. Otherwise the service life of the grinding discs is reduced considerably!

7. Insert the fastening screw of the rotary knob and tighten it firmly with a screwdriver.

If the result is not good enough the grinder needs to be cleaned or you have to change the grinding discs.

9. Cleaning



Always pull the power supply plug out of the outlet before carrying out any maintenance or cleaning work on the device!



Observe the safety instructions under 1.2!



Do not let any foreign objects fall into the grinding mechanism!

9.1 Cleaning with GRINDZ™ Grinder Cleaner

We recommend cleaning your shop grinder once a month with our GRINDZ™ Grinder Cleaner.

Simply take the recommended dose of 70 - 80g and drop it into the empty grinder hopper (2 caps of the jar / 2 sachets).

Adjust the grind setting to coarse and operate as if grinding coffee beans. Once complete, we recommend passing twice as much coffee through to purge any residue.

9.2 Cleaning the grinder casing

Clean the casing of your grinder every now and then with commercially available mild cleaning agents. In addition, you should also clean the magnet in the hopper from time to time by removing any foreign objects that may have become stuck because otherwise this could result in clogging.

9.3 Cleaning the grinding mechanism

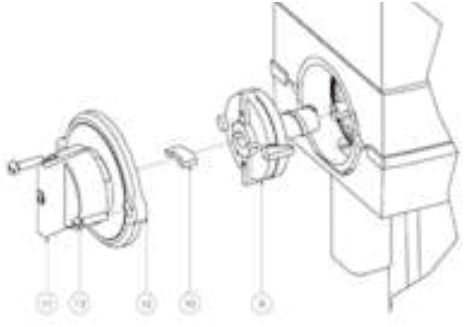



Pull out the power supply plug !

1. Rotate the rotary knob (11) to „coarse“.
2. Unscrew the two screws (13) on the grinder casing cover (12) and then remove this cover.
3. Take the carrier (10) out of the slot of the pre-breaker.
4. Pull the pre-breaker (9) off the motor shaft. Use a special puller (art. no. 4041).
5. Clean the grinding mechanism with a fine brush and remove any foreign objects.
6. Before pushing the pre-breaker (9) back onto the shaft again, lubricate the shaft with non-corrosive, resin-free and foodstuff- compatible grease (e.g. Vaseline).
7. After you have pushed the pre-breaker onto the shaft, line up the two slots so that you can then easily re-insert the carrier (10).



The round side of the driver must point towards the motor.

8. Clean the contact surfaces of the grinder casing and grinder casing cover (12) carefully in order to remove any form of soiling.

During re-assembly, no ground material should stick to the surfaces where the grinder casing and the grinder casing touch each other.

9. Screw down the grinder casing cover (12) tightly with the two screws (13) while changing the side several times.

10. Plug in and switch on the grinder with the setting still at coarse.

11. Slowly turn the rotary knob to fine to make sure the discs are not touching.

12. Rotate the rotary knob back to the desired grind degree. The grinder is now ready for operation again.

10. Maintenance and Repair



Always pull the power supply plug out of the outlet before carrying out any maintenance or cleaning work on the device!

Check the device regularly for any signs of damage on the power supply cable, plug, finger protector, etc.

Any repairs that may be required are only allowed to be carried out by authorised experts. Please contact an authorised customer service centre or your local dealer.

10.1 Grinding Disc Replacement

If the grind capacity decreases and the ground coffee is hot and of irregular grind size, you should change the grinding discs.

1. Take the grinder apart as described in para. 9.3 and remove the grinding discs from the grinder casing and the pre-breaker using a screwdriver.

2. Clean the surfaces of the new grinding discs thoroughly and screw them in position tightly and evenly.

3. Close the grinder casing again as described in para. 9.3 and set the grind degree again as described in para. 8.

11. Spare Parts

Spare parts are usually ordered from your customer service centre or your local dealer. To ensure quick, correct processing of your order, the following information is absolutely required:

1. Type designation and serial number of the grinder
   (on the rating plate on the rear side of the grinder).

2. Color of the grinder

12. Certificate

EC Declaration of Conformity

MAHLKÖNIG

The manufacturer: MAHLKÖNIG GmbH & Co. KG
Tilsiter Straße 142
D - 22047 Hamburg
Tel.: +49 (0) 40 69 69 40 - 0
Fax: +49 (0) 40 69 39 72 - 1

hereby declares that the below mentioned product:

product type: device for food processing

machine description: Coffee grinder

machine typ: K32: Kenia

is in compliance with the following directives and regulations:

- The provisions of the Machinery Directive 2006/42/EG
- The Low Voltage Directive 73/23/EWG
- The EC Electromagnetic Compatibility Directive 2004/108/EG
- The Directive on the restriction of use of certain hazardous substances in electrical and electronic equipment 2011/65/EU
- The EU chemicals regulation (REACH – Regulation) (EG) Nr. 1907/2006

Supplements in Europe:

Regulation 1935/2004	Requirements for materials and the objects with Food comes into contact
Documentation Agent:	Sven Erdmann
Address of the proxy documentation:	See the address of the manufacturer
Done in Hamburg on:	01.08.2013
Function of subscriber:	General Manager
Name of signatory:	Philipp Baumberger

Signature

MAHLKÖNIG GmbH & Co. KG, Amtsgericht Hamburg HR A 85 074; Persönlich haftende Gesellschafterin:
Beteiligungsgesellschaft MAHLKÖNIG mbH, Eingetragen Amtsgericht Hamburg HR B 45 324,
Geschäftsführer: Nils Erichsen, Philipp Baumberger, Jochen Christoph
Dresdner Bank AG (BLZ 200 800 00) Kto. 383 780 400, Postbank Hamburg (BLZ 200 100 20) Kto. 253 89-203.

13. Warranty Conditions

1. The warranty period is 1 year from the date of purchase.

2. The warranty covers all damages that can be attributed to inferior materials or defective workmanship. Corresponding grinders will be repaired or replaced free-of-charge, with the exception of transport or freight charges. Transport is the responsibility of the customer. Therefore, avoid damages with all returns by correct packing.

3. The grinder may only be opened for cleaning purposes in accordance with the Operating Instructions.

4. This warranty does not cover damages which have occurred through: Improper usage, improper maintenance, lack of servicing, usage for purposes other than those intended, incorrect installation, incorrect voltage, breakage, natural wear or for reasons beyond our sphere of influence.

5. In order to maintain the warranty, only original spare parts and accessory parts may be used.

6. Observe in addition our General Delivery Conditions in their respective current version.

7. The manufacturer is in no way liable for consecutive or secondary damages.

8. The warranty does not cover costs emerging from repairs conducted by non-authorized personnel.

Notes

Notes

MAHLKÖNIG GmbH & Co. KG

Tilsiter Straße 142
D- 22047 Hamburg, Germany

Tel.: +49 (0)40 / 69 69 40-0
Fax: +49 (0)40 / 69 39 721
office@mahlkoenig.de ; www.mahlkoenig.de

March 2014

Subject to be changed without prior notice!!

MAHLKÖNIG
The professional art of grinding
since 1924