Operating Instructions
DK15

DK15 L / LS / LH - (coffee)
DM15 LS - (poppy seed)
DG15 LS - (grain)
DP15 L - (spices)



MAHLKÖNIG
The professional art of grinding
since 1924

Dear Customer,

with the “DK15“ you have purchased a grinder with an integrated grater in the well-known MAHLKÖNIG quality.

Our over 80 years of experience in the production and development of grinders have helped us to develop a new product in the MAHLKÖNIG company.

As usual, this new product guarantees top-quality by grinding of all types of coffee, spices and grains.

Before putting the device into service, please read these operating instructions including the safety instructions carefully and observe them at all times. Also instruct your personnel accordingly.

Enclosed you will find many useful tips that will make it easier for you to use the grinder. Keep these operating instructions in a safe, easily accessible location. In case of any unclear points or additionally required information, please contact your local dealer or us directly as the manufacturer.

MAHLKÖNIG GmbH & Co. KG

Table of Contents

1. Safety **4**
1.1 Symbols 4
1.2 Safety Instructions 4
1.3 Purpose of Use 5
1.4 User Requirements 5
1.5 What can be ground? 5

2. Technical Data **5**

3. Description **6**

4. Safety Devices **7**

5. Setting Up and Basic Adjustment **7**
5.1 Setting-up area 7
5.2 Installation 7

6. Operation **8**

7. Operating Faults **8**

8. Grind Adjustment **10**

9. Cleaning **10**
9.1 Cleaning of the grinder casing 10
9.2 Cleaning of the grinding mechanism 11

10. Grinding Disc Replacement **12**

11. Maintenance and Repair **12**

12. Spare Parts **12**

13. Wiring Diagrams **13**

14. Certificate **14**

15. Warranty **14**

1. Safety



Please read and observe the following operating instructions carefully. Non-observance can result in damage to the device as well as in health-threatening risks for the user.

1.1 Symbols

The following two symbols are used in this manual of operating instructions:



Safety instruction:
In case of non-observance, extreme risk of accidents exists.



General instruction:
In case of non-observance, the device can become damaged or optimum operation not be guaranteed.

1.2 Safety Instructions

The grinder you have purchased is only allowed to be used to grind the material to be ground for which the grinder has been designed. Please compare the information on the rating plate with the title page. Ground material is never allowed to be filled into the grinder container.

Do not carry out any modifications or changes on the grinder. In case of non-observance, the manufacturer shall be liable for resulting damage in **no case whatsoever**.

Never operate the grinder in moist or, even worse, in wet surroundings.

Never put your fingers or objects into the rotating grinding mechanism underneath the coffee bean container.

Always pull the power supply plug out of the outlet before carrying out any maintenance or cleaning work on the device.

Never put the device into service with a defective power supply cable. Check the device regularly for any signs of damage on the power supply cable, plug, finger protector, etc.

Any repairs that may be required are only allowed to be carried out by experts. Please contact an authorised customer service centre, your local dealer or us directly as the manufacturer.

When unpacking the device, please check to determine whether the power supply voltage (volts) corresponds to the device voltage on the rating plate.

Children do not recognise the risks that may arise when handling electrical devices; therefore never leave children alone with electrical devices without proper supervision.



Never immerse the device in water and do not operate it with wet hands.

1.3 Purpose of Use

The coffee grinder you have purchased, “DK 27”, may only be used to grind whole roasted coffee beans. Please make sure that only clean and whole coffee beans are ground. Never use the grinder to grind any other products or objects. As there are a number of grater baskets for the grater, only grate products for which the grater baskets have been designed. There are grater baskets for all types of nuts and cheeses.

1.4 User Requirements

No special requirements are specified for the users of this device. It is, however, assumed that this manual of operating instructions has been carefully read and understood and that all instructions provided in this manual will be observed. In addition, working with the device on a safety-conscious basis is also expected.

1.5 What can be ground?

Grinder	Products which can be ground
DK 15 L / LS / LH	roasted coffee
DM 15 LS	poppy seed
DG 15 LS	grain
DP 15 L	spices

2. Technical Data

Description	DK15L/LS/LH DM15LS DG15LS DP15L
Voltage / Frequency / Phases	400V / 50Hz / 3~ 208-220V / 60Hz / 3~
Motor rotations @ 60 Hz @ 50 Hz	 1750 rpm 1400 rpm
Sound Emission Idle Operation Operation*	 63 dB 83 dB
Pre-fuse building	3 x 16A-slow
Safety switch / Overload protection 400 V 208 - 220 V	 adjusted: 6 A adjusted: 11A
Permissible max. Operating time of the Grinder	continuous operation
Dimensions in mm	W 790, H 1550, D 1230
Net Weight	132 kg (291 lbs)
Hopper Capacity*	appr. 20 kg
Container Capacity	200 l

* values depend on grinding material

(Please ask the manufacturer or dealer for technical data on other voltages and frequencies.)

3. Description

Main components and operating elements
The main components and operating elements are shown in the figure.

Pos. 1	Hopper
Pos. 2	Casing with motor and grinding mechanism
Pos. 3	Grind adjustment
Pos. 4	Container
Pos. 5	Hopper slide
Pos. 6	ON / OFF switch
Pos. 7	Reset button
Pos. 8	Ground cable
Pos. 9	Base



4. Safety Devices

Thermal overload circuit breaker
The motor of the grinder is protected by an overload circuit breaker, which interrupts the electric circuit of the motor when the device is subjected to electric overloading. To be able to re-start the grinder, the reset button (Pos.7) on the back side of the casing must be pressed.



The user has no influence whatsoever on this operation. In case of repeated tripping of the circuit breaker, an expert must be consulted since this could cause damage to the motor winding.

Driver
The machine is protected against foreign objects in the grinder by a driver which breaks if the machine is overloaded.

Finger protector / Magnet holder
A combined finger protector / magnet holder is fitted in the hopper of the grinder. It is supposed to prevent the user from reaching into the running grinding mechanism. At the same time, it also prevents ferrous foreign objects from getting into the grinding mechanism. Every now and then you should clean the magnet since adhering foreign objects could be hanging from the magnet.



Never remove the finger protection!

5. Setting-up and Basic Adjustment

A grinding test run is carried out on each grinder in the manufacturer's factory. This is why you may find ground material residue in the grinding mechanism!

5.1 Setting-up Area
Place the grinder on a level surface free from vibration.



Never operate the grinder in moist, or even worse, in wet surroundings.

5.2 Installation
You have received your grinder in operating condition. Now you only need to connect it to a power supply system. Proceed as follows:



Protect your device with a separate pre-fuse (not included in the scope of supplies) according to the information provided under Item 2 „Technical data".



Make sure that the pre-fuse is not overloaded by other consuming devices (e.g. fan-forced heaters, deep freezers).



Determine whether the mains voltage and frequency correspond to the information on the rating plate.

Insert the plug into the available grounded outlet.



After the grinder has been connected, you must check the direction of rotation of the grinding disc (arrow on the ventilator hood). If the grinder is rotating in the wrong direction ask an electrician to reverse the polarity of the socket in compliance with DIN standards.

6. Operation

1. By moving the rotary knob, set the required grind degree (to the left for coarse coffee powder, to the right for finer coffee powder).

2. Place the receiving container under the grinder spout. Now connect the grinder spout (by turning the spout slightly) with the transport container.

3. Only fill whole coffee beans into the hopper.



Please do not forget to attach the ground cable to the ground screw attached to the transport container.

4. Switch the grinder on and do not open the main slide until the green indicator lights up. The grinding process starts.

5. Before switching off the grinder, close the main slide and allow the grinder to grind the remaining beans.

7. Operating Faults

Defect	Cause	Remedy
The grinder hums but does not grind.	The spout is clogged.	Set grinding fineness to „coarse“ and trigger the grinding process. The grinder will then grind itself free. Afterwards, return the setting to the desired grinding fineness.
	Grinding is set too fine.	Turn the grinding fineness setting to the right, to „coarse“, and trigger the grinding process. The grinder will then grind itself free. Afterwards, return the setting to the desired grinding fineness.
	A foreign object is in the grinding mechanism.	Clean the grinding mechanism as described and remove the foreign object. Observe the safety instructions!

Defect	Cause	Remedy
The grinder does not start.	The power supply plug is not inserted.	Insert the plug into the outlet.
	The overload circuit breaker has been tripped.	Check to determine whether the reset button of the circuit breaker has jumped out. Press the reset button in again if appropriate. In case of repeated tripping of the circuit breaker, contact your authorised customer service centre or dealer.
	The pre-fuse was tripped.	Check the pre-fuse. Restore the pre-fuse to its initial state or replace it. Determine whether other consuming devices are also connected to this fuse.
	The motor protector was tripped.	Give the grinder a cooling-off break of approx. 1 hr.

Defect	Cause	Remedy
Grinder rotates but without grinding.	Carrier breakage.	Remove the grinder casing cover, take out the broken pieces of the driver, insert a new driver and then install the grinder casing cover again.
	Incorrect sense of rotation.	Have the polarity checked by specialised personnel.
	Metal parts on the hopper magnet obstruct the incoming flow of material to be ground.	Clean the hopper magnet.

In case of other malfunctions or continued faults, please contact your dealer or your authorised customer service centre.

8. Grind Adjustment

The grinder has been precisely adjusted by the manufacturer. However, if the ground material is no longer fine enough after a longer period, the grinder must then be re-adjusted according to the following procedure:

1. Unscrew the attachment screw in the centre of the rotary knob and remove it.

2. Now switch the grinder on.

3. Now turn the exposed adjusting spindle very carefully and slowly to the right until you hear a light rattling sound (the grinding discs are touching) and then turn it back again immediately by approx. 1 notch to the left. However, you must not be able to hear the grinding discs rattling together.

4. If you grind some beans now, you should get fine grains (in the case of coffee). If the coffee beans have been ground too fine, the grinder can stick together so that the coffee beans can no longer slide down to be ground.



It is important to ensure that no „rattling“ noise of the grinding disks can be heard! Their service life will otherwise be significantly reduced!

5. If the adjustment you have made does not come up to your expectations you can adjust the grind degree as described above.

6. Set the rotary knob on the adjusting spindle such that the marking of the knob is positioned exactly on the right symbol „fine“. Now you should no longer be able to turn it to the right.

7. Replace the attachment screw into the centre of the rotary knob and tighten it again.

9. Cleaning



Always pull the power supply plug out of the outlet before carrying out any maintenance or cleaning work on the device!



Observe the safety instructions under 1.2!

9.1 Cleaning the grinder casing

Clean the casing of your grinder every now and then with commercially available mild cleaning agents. In addition, you should also clean the magnet in the hopper from time to time by removing any foreign objects that may have become stuck because otherwise this could result in clogging.



Do not let any foreign objects fall into the grinding mechanism!!

9.2 Cleaning the grinding mechanism

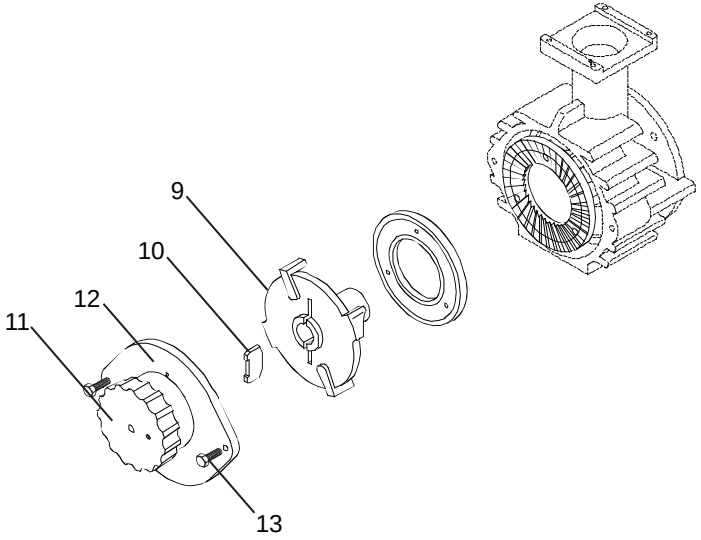

1. Pull out the power supply plug !
2. Rotate the rotary knob (11) to „coarse“.
3. Unscrew the two screws (13) on the grinder casing cover (12) and then remove this cover.
4. Take the carrier (10) out of the slot of the pre-breaker.
5. Pull the pre-crusher (9) off the motor shaft. Use a puller.
6. Clean the grinding mechanism with a fine brush and remove any foreign objects.
7. Before pushing the pre-crusher (9) back onto the shaft again, lubricate the shaft with non-corrosive, resin-free and foodstuff-compatible grease (e.g. Vaseline).
8. After you have pushed the pre-crusher onto the shaft, line up the two slots so that you can then easily re-insert the previously removed driver (10).

The rounded side of the driver must point toward the motor.

9. Clean the contact surfaces of the grinder casing and grinder casing cover (12) carefully in order to remove any form of soiling.

During re-assembly, no ground material is allowed to be sticking to the surfaces where the grinder casing and the grinder casing cover lie on top of one another.

10. Screw the grinder casing cover (12) down tightly with the two screws while changing the side (13) several times.
11. Rotate the rotary knob to the desired grind degree. The grinder is now ready for operation again.

10. Grinding Disc Replacement

If the grinding performance decreases and the ground products are hot and irregular, you should change the grinding discs.

1. Take the grinder apart as described under “9” and remove the grinding discs from the grinder casing and the pre-breaker using a screwdriver.

2. Clean the surfaces of the new grinding discs thoroughly and screw them in position tightly and evenly.

3. Close the grinder casing again as described under “9” and set the grind degree again as described under “8”.

11. Maintenance and Repair



Always pull the power supply plug out of the outlet before carrying out any maintenance or cleaning work on the device!



Check the device regularly for any signs of damage on the power supply cable, plug, finger protector, etc.



Any repairs that may be required are only allowed to be carried out by authorised experts. Please contact an authorised customer service centre or your local dealer.

12. Spare Parts

Spare parts are usually ordered from your customer service centre or your local dealer. To ensure quick, correct processing of your order, the following information is absolutely required:

1. Type designation and serial number of the grinder (on the rating plate on the rear side of the grinder).

2. Color of the grinder

13. Wiring Diagram DK15 208V 60Hz

A1 motor starter Kraus& Naimer M1201C230/01200 M
K1 main electric contactor S1210 C230/3010
F1 motor protection relay Kraus&Naimer T9-004A
S1 ON-OFFpushbutton switch Kraus&Naimer ST1 H 011MB
W1 supply cable UL/CSA AWG 14/4=4X2,08mm² rubbercladding
X1 turnlock plug 20-3d 250V- 3pole 4wire NeMa con

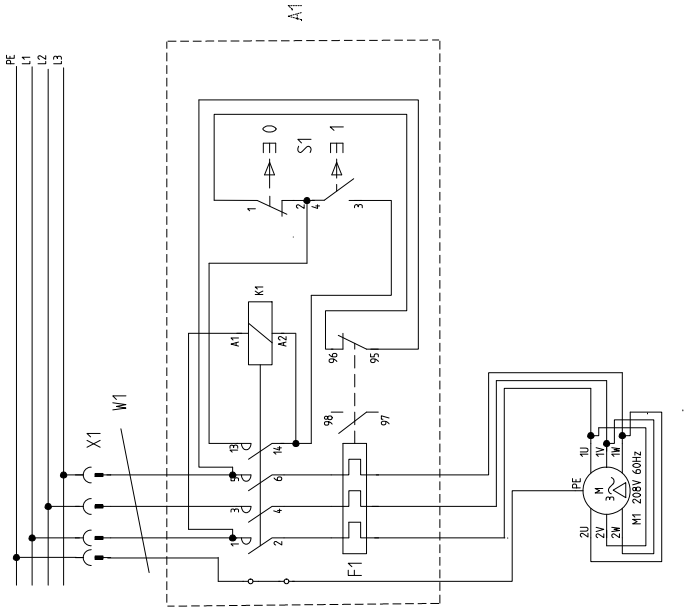

Wiring Diagram DK15 400V 50Hz

A1 Motorstarter Kraus& Naimer M12D1C415/00620 M
motor starter Kraus&Naimer M1201C415/00620 M
K1 Hauptschütz Kraus&Naimer S1210 C415/3010
main electric contactor Kraus&Naimer S1210 C415/3010
F1 Motorschutzrelais Kraus&Naimer T9-004A
motor protection relay Kraus&Naimer T9-004A
S1 Ein-Aus Taster Kraus&Naimer ST1 H 011MB
ON- OFF pushbutton Kraus&Naimer ST1 H 011 MB
W1 Lapp-Kabel Ölflex 5x1,5 / H05VV5-F
supply cable Ölflex 5X1,5 / H05VV5-F
X1 CEE-Kabelstecker Type 213/N/RE16A-6h
plug CEE typ 213/N/RE16A-6h

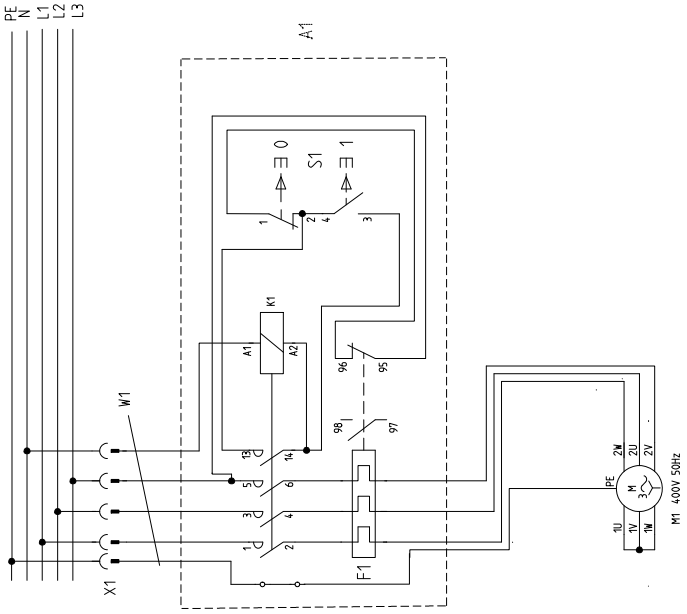

13. Certificate

EC Declaration Conformity

As defined by EMC-directive 89/392/EWG

MAHLKÖNIG GmbH & Co. KG
Tilsiter Straße 142, 22047 Hamburg
Telefon : 040 - 69 69 40 - 0
Telefax : 040 - 69 39 721

Name of the manufacturer or in the EU residential authorized person:

MAHLKÖNIG GmbH & Co. KG

Address of the manufacturer or the authorized person:

Tilsiter Strasse 142, D-22047 Hamburg

announce, that the machine below

product type:	commercial device for food processing
machine description:	Coffee grinder
machine typ:	DK 15 L / LS / LH, DM 15 LS, DG 15 LS, DP 15 L

is in compliance with the conditions of the Directive of Machines 98/37/EG and with the main standards stipulated in the Directive concerning low tension 73/23/EWG and applies to the national laws that transpose it.

Issued in Hamburg:	01.01.2008
Function of subscriber:	Managing Director
Name of subscriber:	Nils Erichsen

Signature

MAHLKÖNIG GmbH & Co. KG, Amtsgericht Hamburg HR A 85 074; Persönlich haftende Gesellschafterin:
Beteiligungsgesellschaft MAHLKÖNIG mbH, Eingetragen Amtsgericht Hamburg HR B 45 324, Geschäftsführer: Nils Erichsen
Dresdner Bank AG (BLZ 200 800 00) Kto. 383 780 400, Postbank Hamburg (BLZ 200 100 20) Kto. 253 89-203
Commerzbank AG (BLZ 200 400 00) Kto. 21 10 294, Ust. Id. Nr.: DE 118 37 22 65

14. Warranty Conditions

1. The warranty period is 1 year from the date of purchase.

2. The warranty covers all damages that can be attributed to inferior materials or defective workmanship. Corresponding grinders will be repaired or replaced free-of-charge, with the exception of transport or freight charges. Transport is the responsibility of the customer. Therefore, avoid damages with all returns by correct packing.

3. The grinder may only be opened for cleaning purposes in accordance with the Operating Instructions.

4. This warranty does not cover damages which have occurred through: Improper usage, improper maintenance, lack of servicing, usage for purposes other than those intended, incorrect installation, incorrect voltage, breakage, natural wear or for reasons beyond our sphere of influence.

5. In order to maintain the warranty, only original spare parts and accessory parts may be used.

6. Observe in addition our General Delivery Conditions in their respective current version.

7. The manufacturer is in no way liable for consecutive or secondary damages.

8. The warranty does not cover costs emerging from repairs conducted by non-authorized personnel.

MAHLKÖNIG GmbH & Co. KG

Tilsiter Straße 142
D- 22047 Hamburg, Germany

Tel.: +49 (0)40 / 69 69 40 - 0
Fax: +49 (0)40 / 69 39 721
office@mahlkoenig.de ; www.mahlkoenig.de

November 2009

Subject to change without prior notice!!

MAHLKÖNIG
The professional art of grinding
since 1924