INSTRUCTION MANUAL

GRILL
ELECTRICAL

KUSINA

"Professionally with Professionals"

DESCRIPTION

- The instructions in this manual contain important information on the safe mounting, usage, cleaning and maintenance of the device. Thus, keep the manual at a place easily accessible by the person who will use the machine, and the technician.
- Mounting, conversions for different gas groups or electrical inlet, and maintenance works of the device should be performed by a specialist authorized in this subject and in accordance with the instructions of the manufacturer company.
- Gas and electrical connections of the device should be arranged according to the tables and electrical diagram given in this manual.
- Manufacturer company accepts no responsibility for the final damages that are caused by any procedure not conforming to the instruction manual, or maintenance or technical interventions that are not performed by authorized people.

MOUNTING INSTRUCTIONS

- Installation and adjustment of the device should be carried out by experienced technical staff.
- Place the device beneath a filtered exhaust hood in order to eliminate smell and fume that may be emitted during cooking.
- Device should be placed on a flat surface by suitably balancing on the four adjustable legs. (Figure 01)
- Place the device at least 10 cm away the side walls.
- Remove the protective nylon on the device. Clean the adhesive particles left on the device with a suitable cleaner.
- Never leave flammable material near the device.

ELECTRICAL CONNECTION

- Connect the device to the electrical installation according to the electrical standards of the relevant country.
- Feed the device with suitable voltage written on the information plate.
- Connect to the electrical installation over a suitable automatic fuse. Fix the said fuse on a place that is easily accessible in case of a danger.
- The cable connecting the device to the electrical installation should be at least type H07 RNF.
- Before connecting the electrical inlet cable to the inlet clamp on the device, connect the cable by passing it through the inlet coupling. And then tighten the coupling cover in a manner that does not allow cable return.
- Electrical inlet clamp can be seen by disassembling front panel.
- Electrical inlet is indicated with a label on the device.
- If the device will be used in a commercial kitchen, apply a correct grounding system. Here, consider DIN VDE D100 Article 540.
- Grounding screw is indicated with a label behind the device.

OPERATOR INSTRUCTIONS

WARNINGS

- Pay attention not to contact hot surfaces of the device!
- Device is designed for professional use and must be used only by person who are trained for this intention.
- Device is intended for cooking, do not use for another purpose.
- If there is any failure in the device, disconnect electrical power by deactivating the main switch.
- Before starting to use the device, carefully clean the surfaces especially those to be in contact with foods.
- During first operation, device will emit fume and smell for a short period. This fume and smell is the result of the insulation material and the substances such as oil, etc. on the metal sheet surfaces. This is not dangerous and will disappear by itself.
- Clean the accumulated food residues that are burned and carbonized on the cooking platina with a suitable scraper everyday at the end of operation. If the said daily maintenance is not performed, accumulated burned food residues may cause a decline in cooking efficiency by creating a crust on the plate. After the end of daily cleaning, cover the plate surface with a thin layer of vegetable oil.
- Empty the oil drawer of the device periodically.

MAINTENANCE

- Do not perform maintenance when the device is loaded with electrical power.
- Commission only authorized services for maintenance and use genuine spare parts.
- Before it cools down completely, wipe the device with a cloth immersed in warm soapy water.
- Do not use cleaning substances and tools that may cause scratches on device surface.
- If required, use chemical cleaners.
- Clean the oil drawer inside the cabinet after each use.
- Do not clean the device with water or vapour pressure. Otherwise, you may cause electrical resistor failure.
- If the device will not be used for a long period, coat the surfaces with a thin layer of Vaseline. In case of any dangerous condition with the device, notify to the authorized service. Never let unauthorized people to interfere in the device.

IMPORTANT

- If the device is operated for a long time, the ground below it and its surrounding may be heated up to 80 °C. Therefore, pay attention that the ground material is heat resistant.
- Do not operate the devices with its adjustable legs removed.

START-UP (Figure 02)

- Turn switch a “A” to position “1”.
- Adjust thermostat “1,2” to desired temperature.
- When signal lights “C 1,2” are off, platina reaches to the desired temperature. You can now start to cook.

TURNING OFF (Figure 02)

- Turn thermostat “B” to position “O”.
- Turn switch “A” to position “O”.

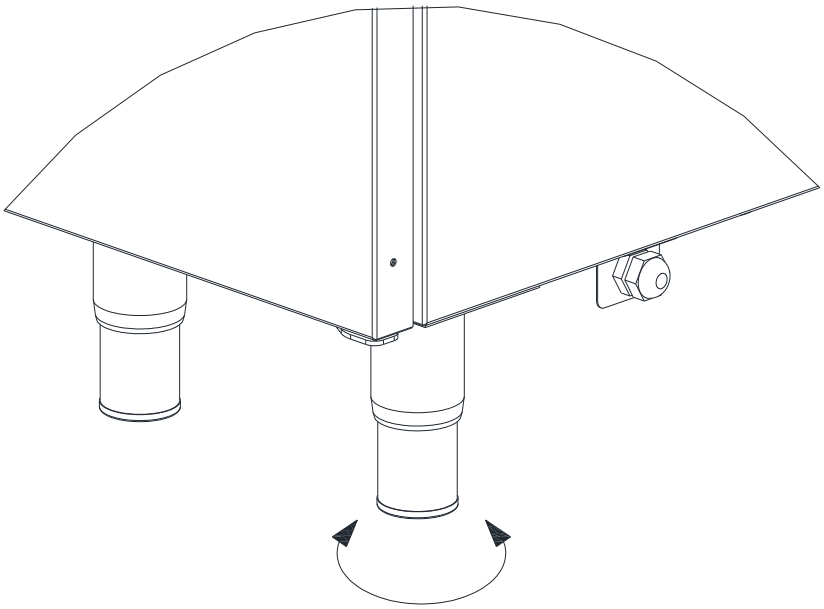

Fig.1

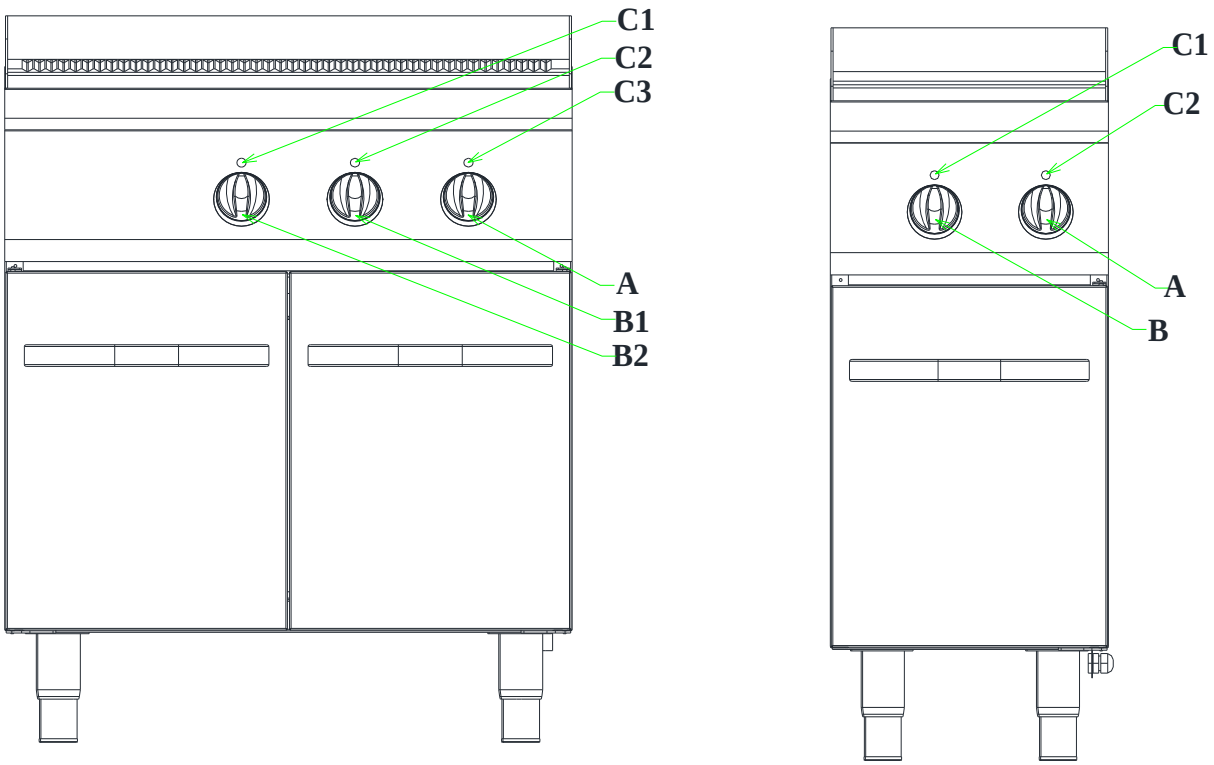

Fig.2

MODELO		G7I100E G7I110E	G7I200E G7I210E G7I220E	G9I100E G9I110E	G9I200E G9I210E G9I220E
WIDTH	mm	730	730	900	900
DEPT	mm	400	800	400	800
HIGHT	mm	900	900	900	900
POWER	KW	3,6	7,2	6	12
ELECTRICAL INLET		400V 3N PE	400V 3N PE	400V 3N PE	400V 3N PE
CAVLE SECTIONS	mm²	5X 1,5	5X 2,5	5X 1,5	5X 2,5

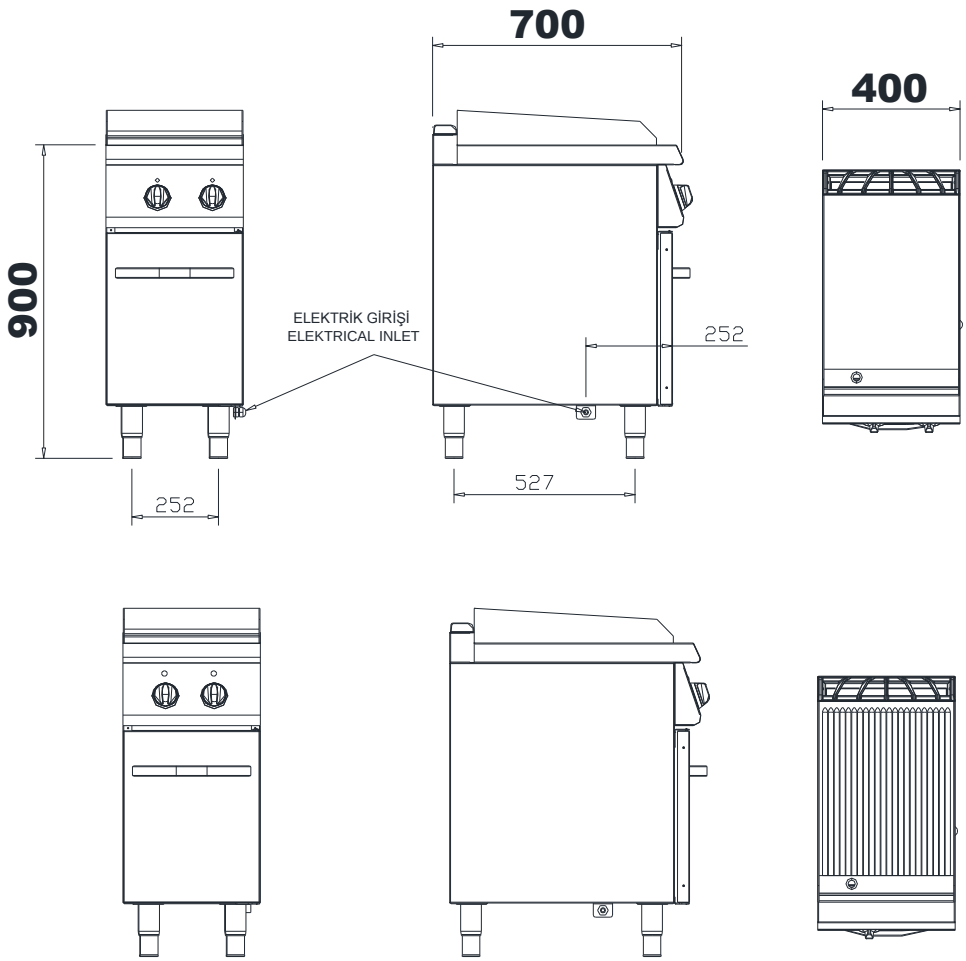

G7I100E
G7I110E

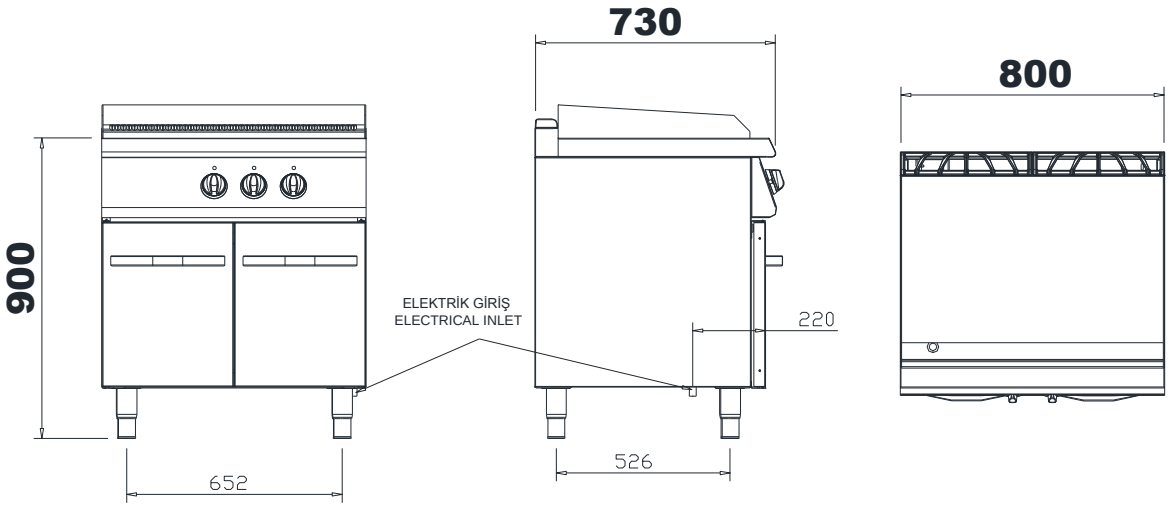

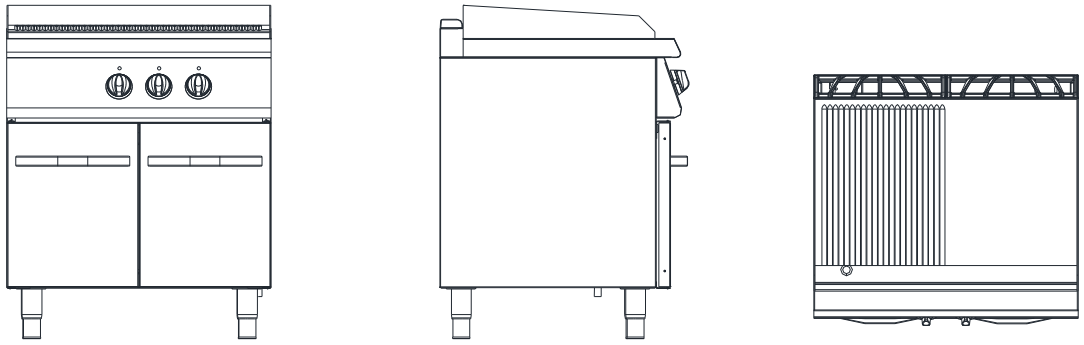

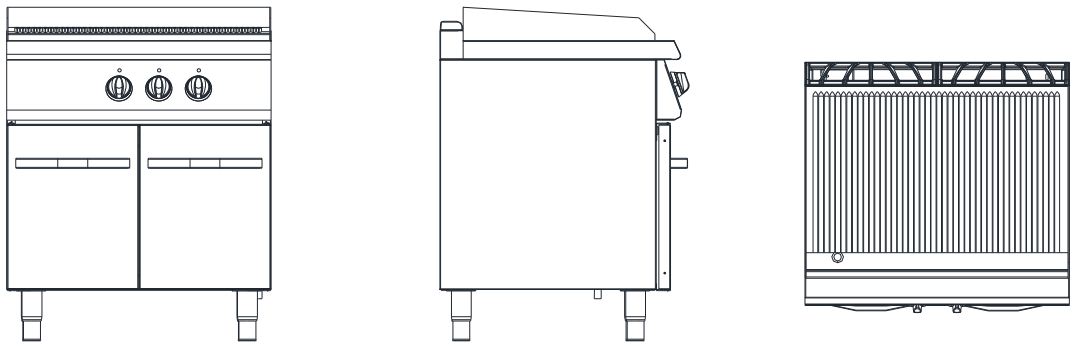

G7I200E
G7I220E
G7I210E

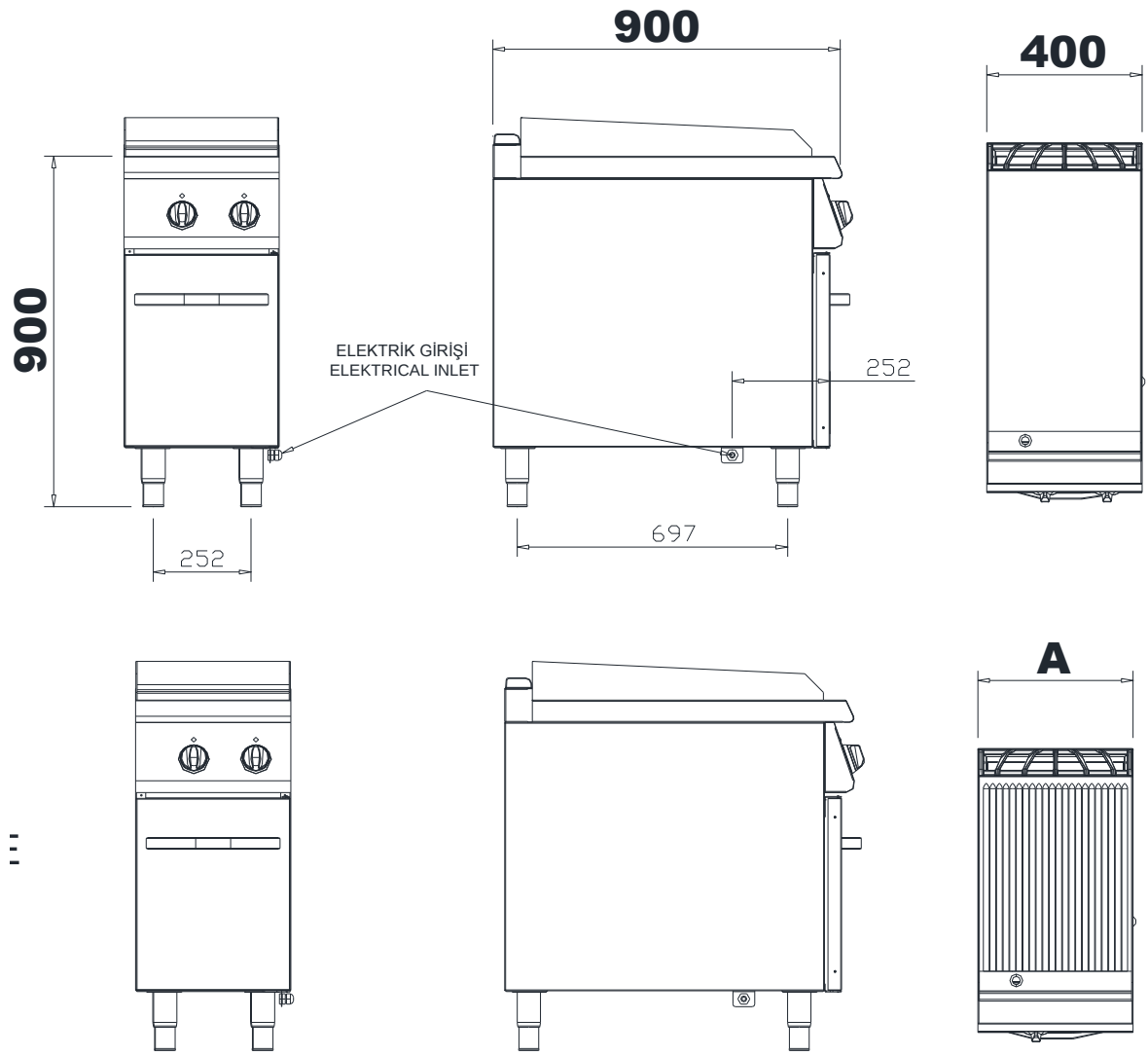

G9I100E
G9I110E

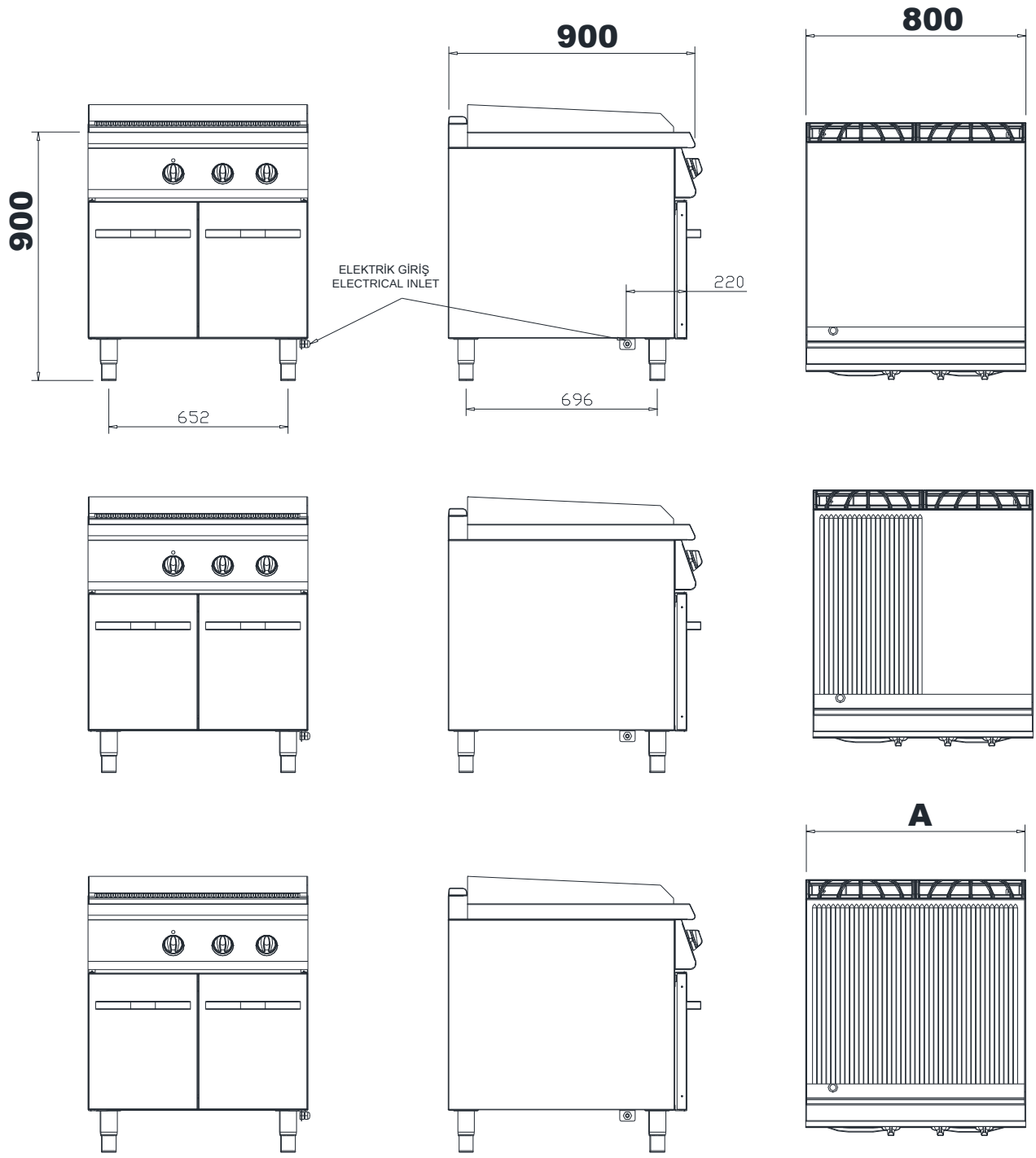

G9I200E
G9I220E
G9I210E

400V AC 3N PE 6000 W
400V AC 3N PE 3600 W

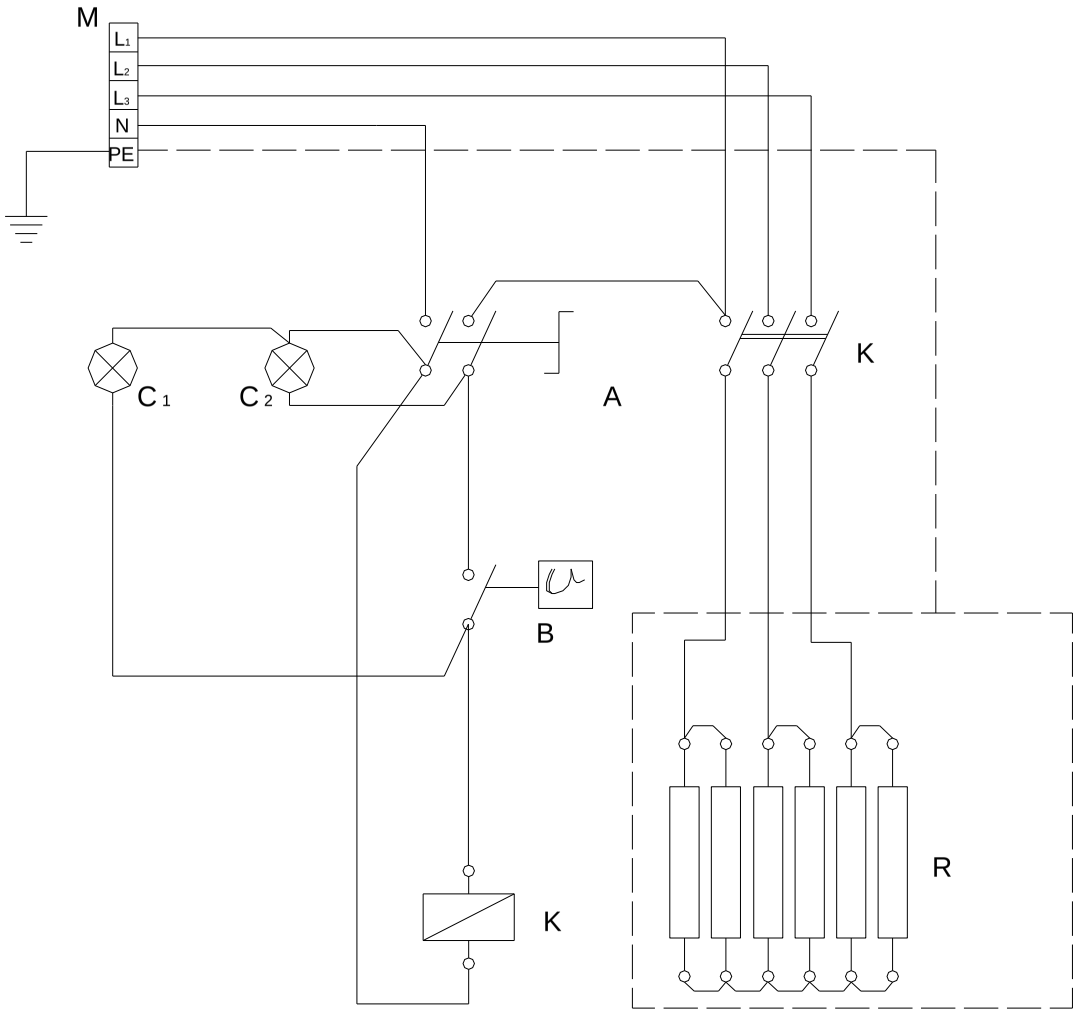

A - MAIN SWITCH
B - THERMOSTAT
C 1,2 - LIGHT INDICATOR
K - CONTAKTOR
R - HEATERS
M - INLET CLAMP

G9I100E - G9I110E - G7I100E - G7I110E

400V AC 3N PE 12000 W
400V AC 3N PE 7200 W

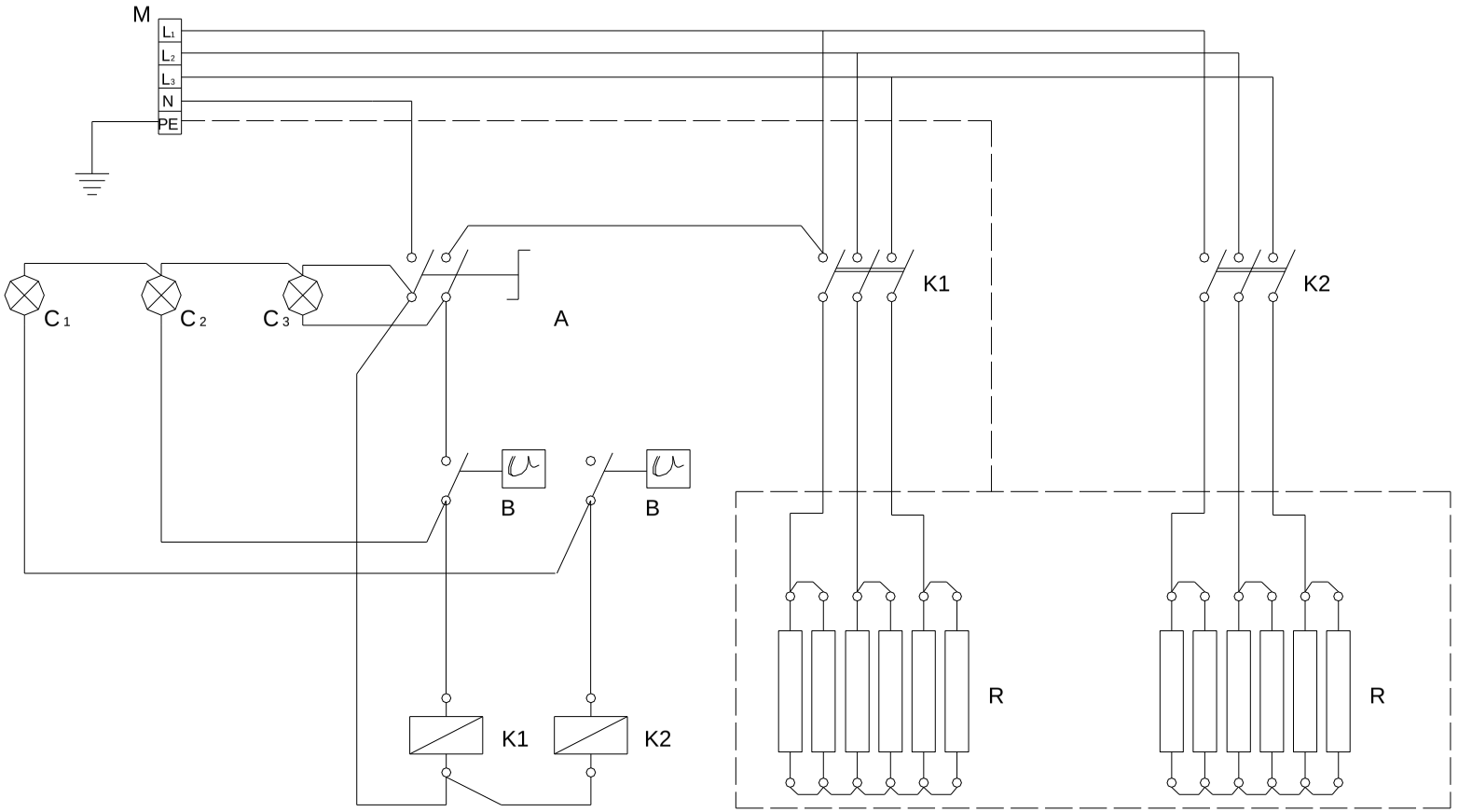

A - MAIN SWITCH
B - THERMOSTAT
C 1,2 3 - LIGHT INDICATOR
K1 2 - CONTAKTOR
R -HEATERS
M - INLET CLAMP

G9I200E - G9I210E - G9I220E - UDFT7DLAPE - G7I210E - G7I220E