USER GUIDE

G3 D500 Series
Airpot Coffee Brewing System



READ AND SAVE THESE INSTRUCTIONS

NOTICE TO INSTALLER: Please leave this booklet with the machine.

Key Features/Specifications/System Requirements....FS30
Important Safeguards....IS2
Installation Instructions (General)....II2
Installation Instructions (Leveling, Water Supply, Electrical)....II8
Operating Instructions....OI23
Cleaning Instructions (Brewer)....CI1
Cleaning Instructions (Thermal Dispensers)....CI9
Programming Guide....PG9
Rough-In Drawing....RD36
Illustrated Parts/Recommended Parts....IP54
Illustrated Parts/Recommended Parts (Tank Assembly, 120 Volt)....IP21
Illustrated Parts/Recommended Parts (Tank Assembly, Dual Voltage)....IP24
Illustrated Parts/Recommended Parts (Tank Assembly, Export)....IP55
Electrical Schematic (120 Volt)....ES55
Electrical Schematic (Dual Voltage)....ES56
Electrical Schematic (Export)....ES57
Troubleshooting Guide (General)....TG5
Troubleshooting Guide (Triac Circuit)....TG8
Error Codes....EC4
Product Warranty....PW1

Contact Information

Wilbur Curtis Co., Inc.
6913 Acco Street | Montebello, CA 90640 US
Phone: 323-837-2300 | Toll Free: 800-421-6150
Email: csrassistance@wilburcurtis.com | Web: www.wilburcurtis.com

For the latest specifications and information go to www.wilburcurtis.com
Toll Free: 800-995-0417 | Monday - Friday 5:30 A.M. - 4:00 P.M. PT
Email: techsupport@wilburcurtis.com

Due to continued product improvement, the products illustrated/photographed in this guide may vary slightly from the actual product.

Key Features

- Precise Gourmet Control Over All Critical Functions — The G3 Digital Control Module provides you the expertise to brew premium gourmet coffee with ease.
- Built-In Fine Tuning Brewing Modes — Pre-infusion or pulse-brew enhances extraction of gourmet coffee flavor. Cold water brew lockout prevents brewing when water temperature is below set level.
- The Digital Control Module is encapsulated in high-tech polymer and is impervious to heat, steam and moisture.
- Intuitive Scroll-Through Precision Programming — Large, brightly lighted display communicates functions at a glance. Easily adjust time, volume, temperature, brew functions and more.
- Industry's most effective mineral tolerant design.

Specifications (Selected Models)

Electrical Supply Requirements

MODEL #	DESCRIPTION	PHASE	VOLTS	AMPS	HEATING CONFIG	WIRE	WATTS	HERTZ	GAL/HR
D500GT12A000	Single brewer	1 PH	120 V	14.0 A	1 x 1600 W	2W + G	1675 W	50/60 Hz	4.0
D500GTH12A000	Single brewer, tall	1 PH	120 V	14.0 A	1 x 1600 W	2W + G	1675 W	50/60 Hz	4.0
D500GT63A000	Single brewer, dual voltage	1 PH	120/220 V	13.6/12.0 A	2 x 1600 W	2W/3W + G	1600/2700 W	50/60 Hz	4.0/7.0
D500GTH63A000	Single brewer, dual voltage, tall	1 PH	120/220 V	13.6/12.0 A	2 x 1600 W	2W/3W + G	1600/2700 W	50/60 Hz	4.0/7.0
D500GT30A000	Single brewer, Export	1 PH	230 V	16.9 A	1 x 3500 W	2W + G	3880 W	50/60 Hz	7.0

Dimensions / Water Supply Requirements

MODEL #	HEIGHT	WIDTH	DEPTH	SHIP WEIGHT	SHIP CUBE	WATER CONNECTOR	WATER PRESSURE	MIN. FLOW RATE
D500GT12A000	24.48"	9.25"	20.38"	34.0 lbs	2.21 cu ft	1/4" flare	20 - 90 psi	1.0 gpm
D500GTH12A000	27.75"	9.25"	20.38"	35.0 lbs	2.21 cu ft	1/4" flare	20 - 90 psi	1.0 gpm
D500GT63A000	24.48"	9.25"	20.38"	34.0 lbs	2.21 cu ft	1/4" flare	20 - 90 psi	1.0 gpm
D500GTH63A000	27.75"	9.25"	20.38"	35.0 lbs	2.21 cu ft	1/4" flare	20 - 90 psi	1.0 gpm
D500GT30A000	24.48"	9.25"	20.38"	34.0 lbs	2.21 cu ft	1/4" flare	20 - 90 psi	1.0 gpm

Following are the factory default settings for the D500 brewer:

- Brew Temperature = 200°F
- Brew Volume = 74oz. (2.2L)
- Energy Save Mode = Off

Symbols



This is the safety alert symbol. It is used to alert you to potential physical injury hazards. Obey all safety messages that follow this symbol to avoid possible injury or death.



DANGER - Indicates a hazardous situation which, if not avoided, will result in death or serious injury.



WARNING - Indicates a hazardous situation which, if not avoided, could result in death or serious injury.



CAUTION - Indicates a hazardous situation which, if not avoided, could result in minor or moderate injury.



NOTICE - Indicates a situation which, if not avoided, could result in property damage.



IMPORTANT - Provides information and tips for proper operation.



SANITATION REQUIREMENTS

Important Safeguards/Conventions



WARNING:

- Make sure that this appliance is installed and grounded according to the INSTALLATION INSTRUCTIONS by qualified personnel before attempting to use it. Failure to follow the INSTALLATION INSTRUCTIONS could result in personal injury or void the warranty.
- This appliance is designed for commercial use. Any service other than cleaning and preventive maintenance should be performed by an authorized Wilbur Curtis service technician.
- To reduce the risk of fire or electric shock, DO NOT open the service panels. There are no user serviceable parts inside.
- Keep hands, arms and other items away from hot surfaces of the unit during operation.
- Clean the appliance and any dispensers completely before using them for the first time as according to the CLEANING INSTRUCTIONS. Clean them regularly as instructed in the CLEANING INSTRUCTIONS.
- Use this appliance only for its intended use, brewing/dispensing hot and/or cold beverages/water.
- This appliance is not intended for use by persons (including children) with reduced physical, sensory or mental capabilities or lack of experience and knowledge, unless they have been given supervision or instruction concerning use of the appliance by a person responsible for their safety.
- Children should be supervised to ensure that they do not play with the appliance.
- Avoid spillage onto the power (mains) connector.

CE Requirements

- This appliance must be installed in locations where it can be overseen by trained personnel.
- For proper operation, this appliance must be installed where the temperature is between 5°C to 35°C.
- Appliance shall not be tilted more than 10° for safe operation.
- An electrician must provide electrical service as specified in conformance with all local and national codes. For safe use, an all-pole disconnection must be incorporated into the fixed wiring in accordance with the wiring rules outlined in clause 7.12.2 of IEC 6.335-1 for meeting the minimum electrical safety of this standard.
- This appliance must not be cleaned by water jet.
- This appliance can be used by persons aged from 18 years and above if they have been given supervision or instruction concerning use of the appliance in a safe way and if they understand the hazards involved.
- Keep the appliance and its cord out of reach of children aged less than 18 years.
- Appliances can be used by persons 18 years and above with reduced physical, sensory or mental capabilities or lack of experience and knowledge if they have been given supervision or instruction concerning use of the appliance in a safe way and understand the hazards involved.
- Children under the age of 18 years should be supervised to ensure they do not play with the appliance.
- If the power cord is ever damaged, it must be replaced by the manufacturer or authorized service personnel with a special cord available from the manufacturer or its authorized service personnel in order to avoid a hazard.
- Machine must not be immersed for cleaning.
- Cleaning and user maintenance shall not be made by children unless they are older than 18 years and supervised.
- This appliance is intended to be used in household and similar applications such as:
  - – staff kitchen areas in shops, offices and other working environments;
  - – by clients in hotels, motels and other residential type environments;
  - – bed and breakfast type environments.
- This appliance not intended to be used in applications such as:
  - – farm houses
- Access to the service areas permitted by Authorized Service personnel only.
- The A-Weighted sound pressure level is below 70 dBA.

WARNING: Installation is to be performed only by a qualified installer.

WARNING: Improper electrical connection may result in an electric shock hazard. This brewer must be properly grounded.

NOTICE: DO NOT connect this brewer to a hot water supply. The water inlet valve is not rated for hot water. Do not exceed the maximum water pressure stated in the *SPECIFICATIONS* section.

IMPORTANT: Observe all governing codes and ordinances.

Installation Instructions

Installation Requirements

- A secure surface capable of supporting the weight of the appliance.
- For units without an attached cord set: Appropriately sized, UL listed, grounding type power cable to meet the electrical specifications for the appliance. If you have questions about the correct cable size and length, consult a qualified installer. If the appliance will be hard wired to a junction box, the power cable must be long enough so that the unit can be moved for cleaning underneath.
- A grounded electrical connection to an electrical circuit that meets the electrical specifications of the appliance (see *SPECIFICATIONS*). The circuit must be protected by the appropriate sized circuit breaker. If you are not certain that the existing circuit meets the requirements for your unit, consult a licensed electrician.
- A water filtration system is required to maintain trouble-free operation. Wilbur Curtis Co., Inc. recommends a Wilbur Curtis approved water filter. Visit www.wilburcurtis.com to see the full line of Wilbur Curtis approved water filters.
- Potable water supply line connection from the water filter capable of supplying the minimum flow rate required by the specifications. The water supply line must be able to connect to the flare fitting on the back of the unit. See the *SPECIFICATIONS* section for the correct size. The water line should also be capable of being controlled by a shut off valve. Do not connect the water line to a saddle valve.

NSF International requires the following water connection:

1. A quick disconnect or additional coiled tubing (at least two times the depth of the appliance) is required so that it can be moved for cleaning underneath.
2. This equipment is to be installed with adequate back-flow protection to comply with applicable federal, state and local codes.
3. Water pipe connections and fixtures directly connected to a potable water supply shall be sized, installed and maintained in accordance with federal, state and local codes.

The International Plumbing Code of the International Code Council and the Food and Drug Administration (FDA) Food Code manual, direct that this equipment must be installed with adequate back-flow prevention in compliance with federal, state and local codes. For units installed outside of the U.S.A., make sure that the installation is in compliance with the applicable plumbing/sanitation code for your area.

Installation

Leveling

WARNING: Use the leveling legs to level the brewer only. Do not use them to adjust brewer height. Do not extend them higher than necessary.

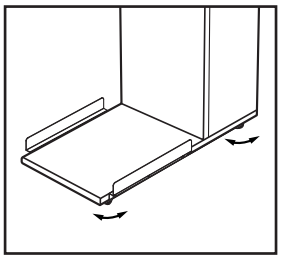

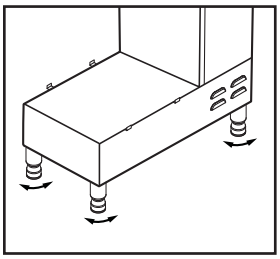

1 Position the brewer on the counter top. Level it left to right and front to back by turning the bottom of the legs.

Connect the Water Supply

2 Flush the water supply line prior to installation to purge air and debris from the water filter and tubing.

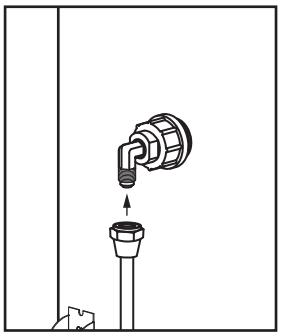

3 Connect the water supply line to the flare fitting on the back of the brewer. Leave the water supply valve closed until the power is connected.

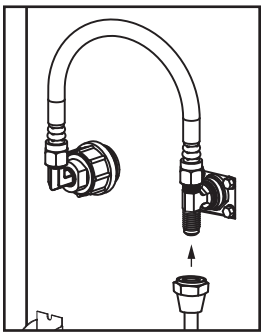

Connect the Brewer Wiring

Brewers Without A Cord Set Attached

WARNING: Turn off power to the junction box at the circuit breaker panel before connecting the power cable to the brewer.

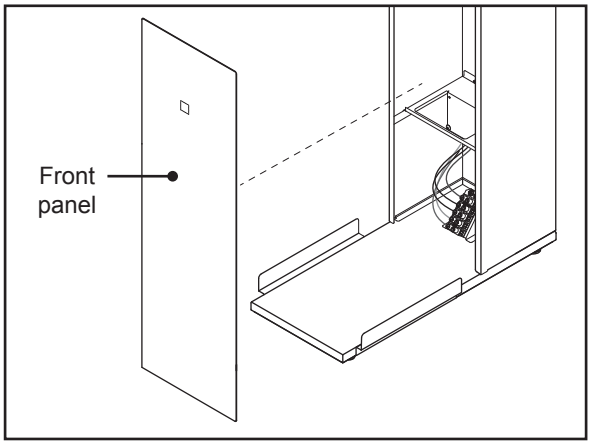

4 Remove the screws that hold the front cover in place and remove the cover.

5 Loosen the strain relief on the back of the brewer.

6 On dual voltage units being operated at 220 Volts (nominal) disconnect the existing power cable from the terminal block and remove.

7 Feed the 220 Volt power cable into the brewer.

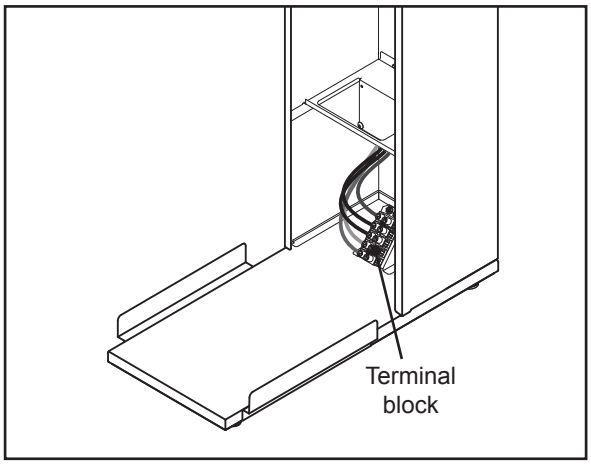

8 On dual voltage units being operated at 220 Volts, disconnect and cap the jumper wire between the “C” and “N” terminals on the terminal block.

9 Connect the wires on the power cable to the terminal block inside the brewer.

10 Tighten the strain relief and replace the front cover.

11 Connect the power cable wires to the terminals in the junction box. See the *ELECTRICAL SCHEMATIC* for the power supply requirements.

Connect the Brewer Wiring (cont.)

Brewers With A Cord Set Attached

12 Connect the power cord to the appropriate electrical outlet.

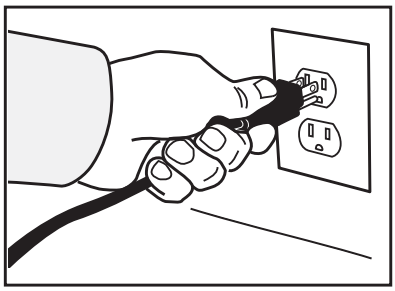

WARNING: Connect the power cord to the appropriate type and size electrical outlet. If the electrical outlet is not compatible with the power cord, have it upgraded by a licensed electrician. Do not modify the power plug. Do not use an extension cord. Do not use a power cord/plug that is damaged.

Connect the Bag-in-Box (BIB) Sweetener - Units Equipped for Brewing Sweet Tea Only

13 Connect two Bag-in-Box (BIB) sweeteners to the brewer sweetener supply hoses as instructed in the *OPERATING INSTRUCTIONS* section. Connecting two bags allows the brewer to continue operating if one bag runs out.

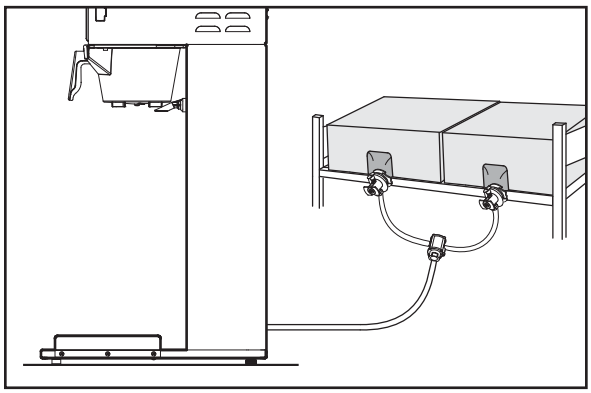

Power Up the Brewer

14 Turn on the water supply valve.

15 Make sure that the circuit breaker supplying power to the unit is on.

16 Turn the toggle switch on the back of the brewer to the ON position. The water tank will start to fill. While the tank is filling, inspect the water supply line for leaks.

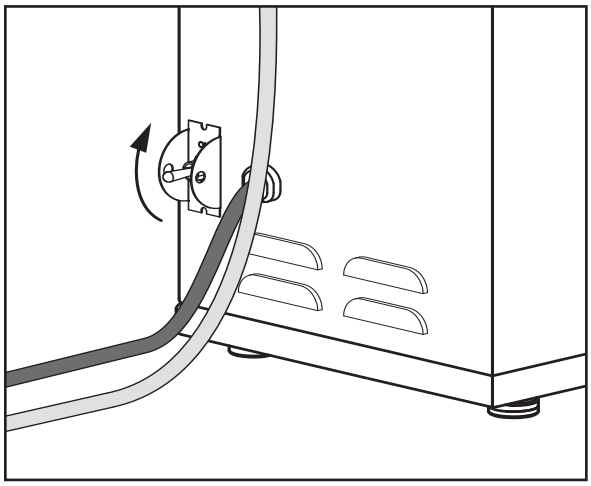

17 When the water in the tank rises to the correct level, the heating elements will turn on automatically. Depending on the incoming water temperature and the electrical specifications, the water tank typically requires 20 to 30 minutes to reach the factory set operating temperature. When the water has heated, **Ready to brew** will be displayed on the LCD screen.

IMPORTANT: When operating the brewer at higher elevations, reduce the operating temperature by 2°F for each 1000 feet of elevation. See *PROGRAMMING GUIDE*.

18 Perform a brew cycle of a least 12 ounces to purge any remaining air from the system. See *OPERATING INSTRUCTIONS*. During the initial brew cycle and whenever the filter is replaced, you may hear the sounds of air being purged from the filter, tubing and water tank.

Brewing Instructions

WARNING - TO AVOID SCALDING, AVOID SPLASHING. Keep body parts clear of the brewer during brewing. Do not remove the brew basket while "Brewing" appears on the display.

The G3 Brewer is factory preset for optimal performance.

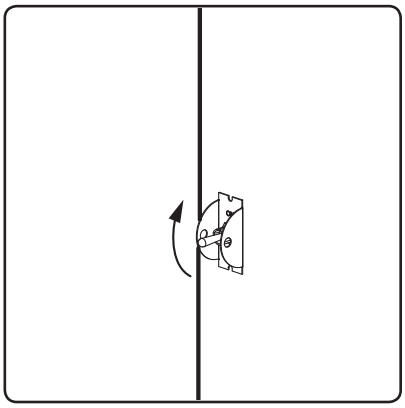

1 The brewer should be ON. Confirm this at the rear toggle switch. "Ready to brew" should be on the display. If the brewer is connected to an inter-lock grinder, the grinder should be on. When inter-lock connection is made, grind coffee at this time.

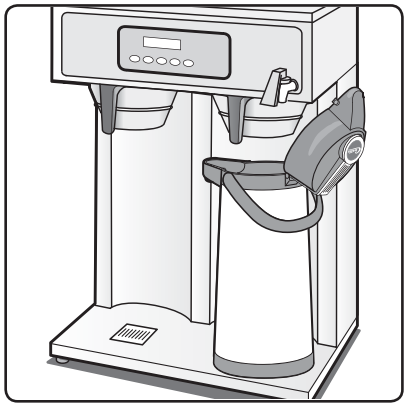

2 Center an empty airpot under the brew basket.

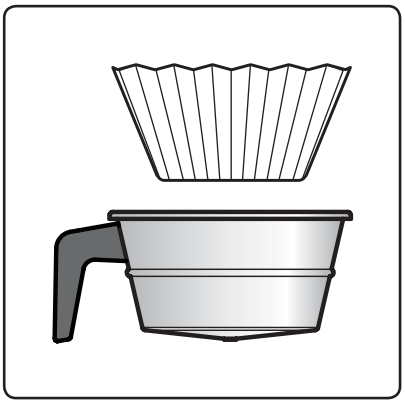

3 Insert a clean paper filter into the brew basket.



4 Fill with the proper amount of ground coffee. Level the coffee in the filter.



5 Slide the filled brew basket into the brew rails under the control panel. Slide it all the way back until it stops.

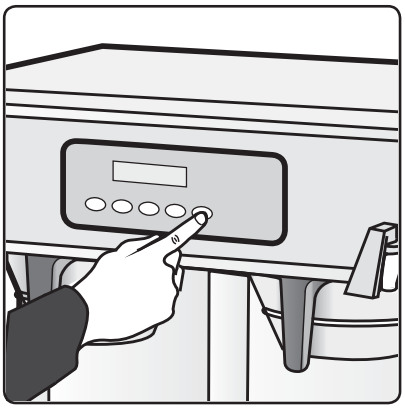

6 Press the brew button. Brewing will begin immediately.

The brewer will brew coffee based on the settings programmed into the universal control module (UCM). To change the settings, see the ***PROGRAMMING GUIDE*** section.

WARNING: HOT SURFACES - To avoid injury, allow the brewer and dispenser(s) to cool before cleaning.

NOTICE - Do not use cleaning liquids, compounds or powders containing chlorine (bleach) or corrosives. These products promote corrosion and will damage the finishes. **USE OF THESE PRODUCTS WILL VOID THE WARRANTY.**

Cleaning The Brewer - Daily

WARNING: DO NOT immerse the brewer in water or any other liquid.

The brewer should be OFF. Turn the brewer off by flipping the rear toggle switch to the OFF position.

1 Remove the dispenser(s). Wipe exterior brewer surfaces with a damp cloth to remove spills and debris.

2 Remove the brew basket(s) and clean them in a mild detergent solution. Use a soft bristled brush for hard to clean areas. Rinse with clean water, then dry.

3 Wipe the spray head area with a cloth soaked in a mild detergent solution. Rinse with a cloth soaked with clean water removing any residual detergent. Use a clean, soft cloth to dry.

4 Dump out the drip tray(s) (if applicable). Rinse with clean water, then dry with a soft, clean cloth.

Cleaning The Brewer - Weekly

The brewer should be OFF. Turn the brewer off by flipping the rear toggle switch to the OFF position.

1 Remove the spray head(s), unscrewing counterclockwise from the dome plate.

2 Thoroughly clean and rinse the dome plate area.

3 Clean the brew basket rails with a brush soaked with a mild detergent solution. Rinse the area with a cloth soaked with clean water, removing any residual detergent.

4 Dry the area with a soft, clean cloth.

5 Reattach the spray head(s).

Cleaning the Airpot/Pour Pot (Daily)

WARNING: DO NOT immerse the airpot/pour pot or lid assembly in water or any other liquid. Do not place the airpot/pour pot or lid in a dishwasher. Placing a airpot or pour pot in a dishwasher will void the warranty.

Start by preparing a mild solution of detergent and warm water. Remove the airpot/pour pot from the brewer and remove/open the lid. On airpots, remove the nozzle assembly. Rinse.

Cleaning Airpots

1 **Wash** - Wipe the exterior surfaces of the airpot and lid with a sponge soaked with the detergent solution to remove spills and debris. Fill the liner with the detergent solution. Use a sponge cleaning brush to clean inside. Clean the spout/siphon tube with the detergent solution.

2 **Rinse** - Rinse the airpot and the spout/siphon tube with clean, warm water.

3 **Sanitize** - Sanitize the interior of the airpot, the spout/siphon tube and the lid, using a commercial sanitizer suitable for food grade applications. Swab, brush or pressure spray the sanitizing solution according to the directions on the package.

4 **Air Dry** - Turn the airpot and lid upside down. Allow all parts to air dry.

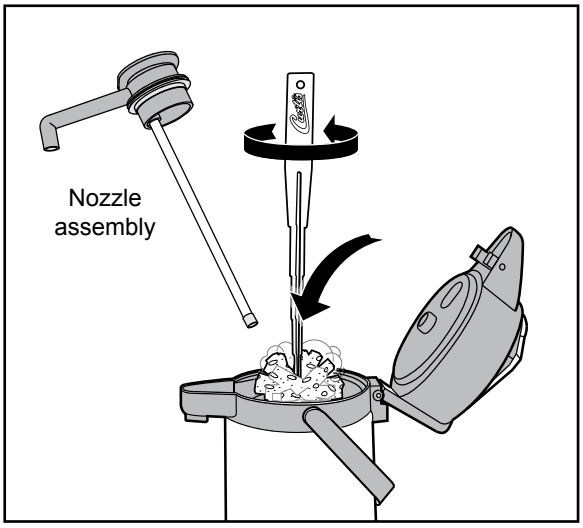

TLXA2201G000 shown. Appearance and size varies with model number.

Cleaning Pour Pots

1 **Wash** - Wipe the exterior surfaces of the pour pot and lid with a sponge soaked with the detergent solution to remove spills and debris. Fill the liner with the detergent solution. Use a sponge cleaning brush to clean inside.

2 **Rinse** - Rinse the pour pot and the lid with clean, warm water.

3 **Sanitize** - Sanitize the interior of the pour pot and the lid, using a commercial sanitizer suitable for food grade applications. Swab, brush or pressure spray the sanitizing solution according to the directions on the package.

4 **Air Dry** - Turn the pour pot and lid upside down and allow to air dry.

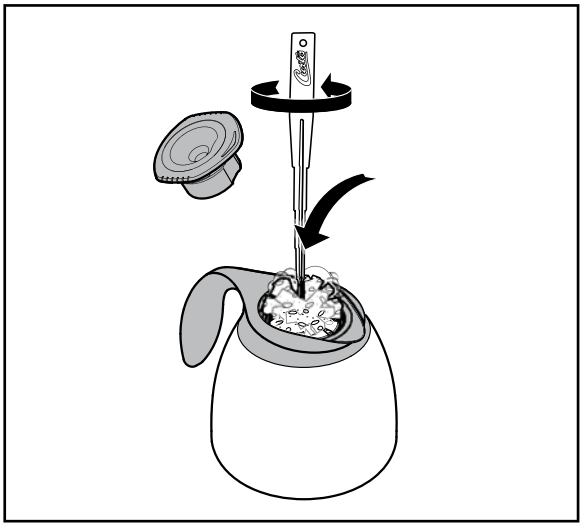

CLXP6401S100 shown. Appearance and size varies with model number.

NOTE: The stem on the bottom of TFT series pour pot lids have a built-in sensor used for the FreshTrac feature. Keep this stem free from coffee oil build-up for proper operation. After cleaning, inverting the lid for 30 seconds resets the FreshTrac timer.

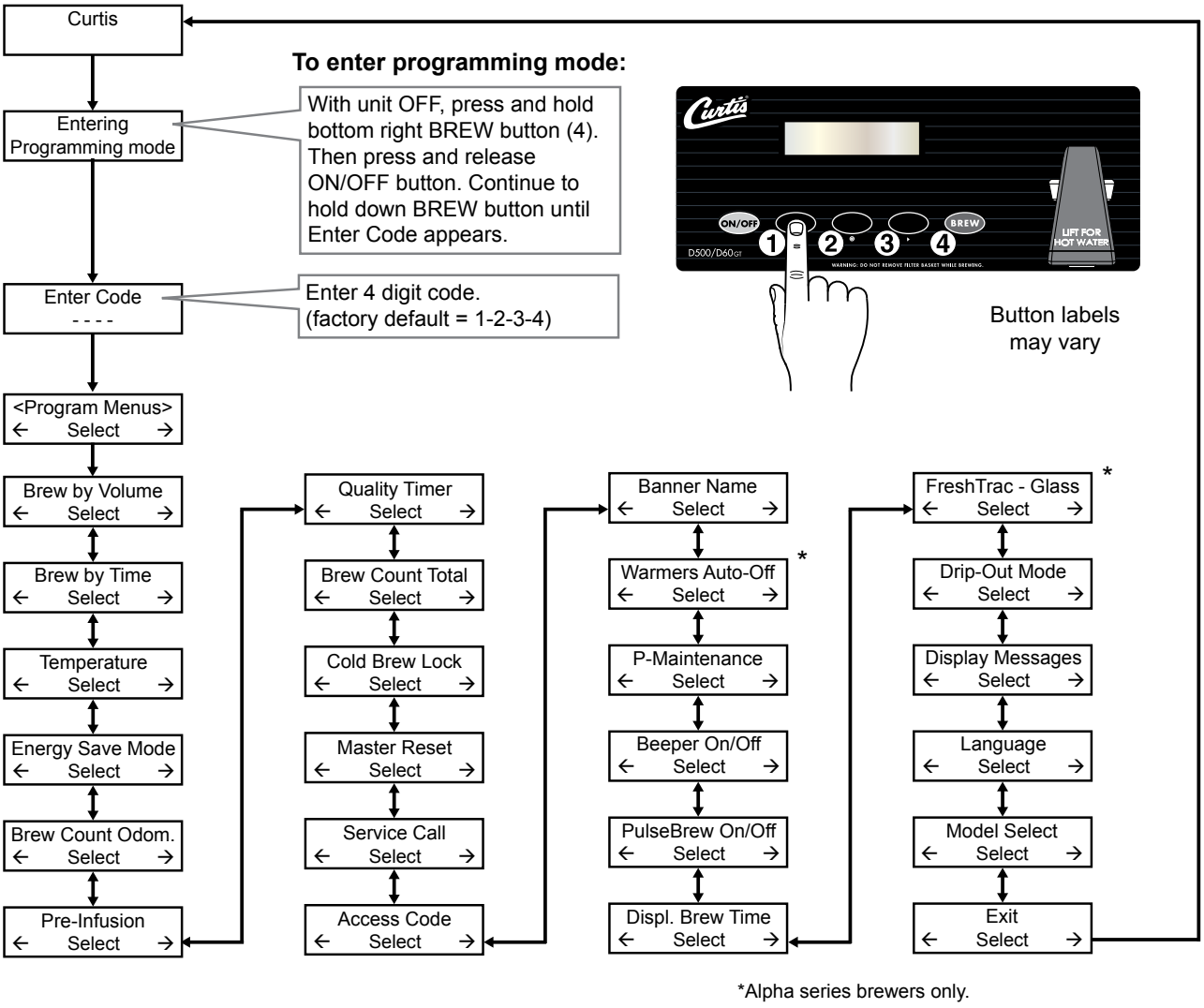

IMPORTANT: All programming functions are performed with the three center buttons.

The symbols below the buttons are:

- ◄ Scroll UP (1)
- ⊙ SELECT or ENTER to save new parameter (2)
- ► Scroll DOWN (3)

Once you enter programming mode, press ◄ or ► to scroll UP or DOWN through the various functions/features. Press ⊙ (Select) to make changes to the function/feature displayed. Then press ◄ or ► to scroll through the various available settings. See ***Programming Options*** for detailed descriptions.

Programming Options

See the first page of the programming guide for instructions on accessing each individual menu item.
Some menus save and exit automatically when a parameter is updated. Other menus exit to the previous menu when a parameter is saved. To exit, press ► until EXIT appears on the display, then press ⊙.

Brew by Volume - adjusts the volume brewed (the factory default is 74oz (2.2L). With an empty airpot in place, press the appropriate BREW button. When the desired volume is reached, press the same BREW button again to stop the brew cycle and set the volume.

Brew by Time - adjusts the amount of coffee brewed by time rather than by volume (the factory default is 3min-0sec). Once accessed, press ◄ or ► until the number of minutes is flashing. Then press ⊙ repeatedly to change the number value. Press ◄ or ► until the number of seconds is flashing. Then press ⊙ repeatedly to change the number value. Press ◄ or ► until "ex" is flashing, then, press ⊙ to exit.

Temperature - sets the brewing temperature of the water held in the water tank (the factory default is 200ºF). The range is 170ºF to 206ºF. Once accessed, press ◄ or ► to choose the desired temperature. Then press ⊙ to set and exit.

Energy Save Mode - saves energy during periods when the brewer is not in use (the factory default is OFF). When set to ON, the brewer automatically shuts off two hours after the last brew cycle. Press the ON/OFF button to return to normal operation. When set to ON 140ºF, the brewer shuts off two hours after the last brew cycle, but the water tank temperature remains at 140ºF. Use the ON 140ºF setting to reach brewing temperature faster after periods of non-use. Once accessed, press ◄ or ► to choose the desired setting. Then press ⊙ to set and exit.

Brew Count Odom - When accessed, this feature displays the total brew cycles since the odometer was last reset. Press ◄ to exit or ⊙ reset and exit.

Pre-Infusion - sets the brewer Pre-Infusion time (Pulse Brew must be off to access, the factory default is Disabled). Pre-Infusion increases control of coffee clarity and extraction. When turned on, the range is 10 to 60 seconds. Once accessed, press ◄ or ► to choose the desired setting, then, press ⊙ to exit. To turn off pulse brew mode, choose 0 for the time.

ⓘ When Pre-infusion is ON, Pulse Brew disappears from the list of menu items.

Quality Timer - notifies the user that the coffee is no longer fresh by monitoring the amount of time since the BREW button was last pressed (the factory default is Off). When time expires, an audio alarm turns on and "Quality Timer" flashes on the display. Once accessed (⊙), press ◄ or ► to increase or decrease the amount of time. The range is Off to 120 minutes (2 hours). Press ⊙ to set and exit.

Brew Count Total - when accessed, displays the total brew cycles on the brewer. It cannot be reset. The display returns to the previous screen automatically after a few seconds.

Cold Brew Lock - adjusts the temperature at which the brewer will brew coffee when the BREW button is pressed (**Ready to Brew** appears on the display, the factory default is 15ºF). This feature also adjusts the temperature at which the heating element turns on to reheat the water in the tank. The available settings are 5°F, 15°F and OFF. OFF is within 30°F below the temperature setting. Once accessed, press ◄ or ► to choose the desired setting. Then press ⊙ to set and exit.

Master Reset - resets the brewer universal control module (UCM) to the factory default settings. Once accessed, "Are You Sure?" will appear on the display. Press ◄ for Yes or ► for No.

Programming Options (cont.)

Service Call - sets the service phone number that appears on the display when the UCM detects a SENSOR ERROR or WATER ERROR . Once accessed, press ◄ or ► to choose the number to be changed. Then press ⊙ repeatedly to change the number value. Press ◄ or ► to choose the next number to change or choose exit and press ⊙.

Access Code - sets the access code entered to access programming mode (the factory default is 1-2-3-4). Once accessed, press ◄ or ► to choose the number to change. Then press ⊙ repeatedly to change the number value (range is 1 to 4). Press ◄ or ► to choose the next number to change or choose exit and press ⊙.

Banner Name - changes the banner name that appears on the display (the factory default is **Curtis**). No banner name appears when all blanks are entered. Once accessed, press ◄ or ► to choose the letter to change. Then press ⊙ repeatedly to change the letter value. Press ◄ or ► to choose the next letter to change or choose ex and press ⊙ to exit.

Warmer Auto-Off - (Alpha series units only) adjusts the length of time that elapses before the warmer(s) shut off automatically. The range is Off to 4 hours (the factory default is Off). Once accessed, press ◄ or ► to adjust the number of hours. Then press ⊙ to set and exit.

P-Maintenance - turns on/off and adjusts the P-Maintenance (preventive maintenance) brew monitor (the factory default is OFF). When ON, the UCM measures the number of gallons brewed before the P-Maintenance reminder appears on the display. The range is Off to 9500 gallons. Once accessed, press ◄ or ► to choose the desired setting, then, press ⊙ to exit.

Beeper On/Off - turns the beeper that is heard each time a button is pressed on or off (the factory default is ON). Once accessed, press ◄ or ► to choose the desired setting. Then, press ⊙ to exit.

Pulse Brew - selects the pulse brew pattern (Pre-Infusion must be off to access, the factory default is C). The pulse brew pattern selected “tunes” or changes the flavor of the coffee. Once accessed, press ◄ or ► to choose the desired setting. Then, press ⊙ to exit.

When Pulse Brew is on, Cold Brew Lock is set within 5°F and, Cold Brew Lock and Pre-Infuson disappear from the list of program selections.

Pulse Brew Guidelines

- Filter pack type coffees typically extract better with the A and B pulse setting.
- Decaffeinated coffees typically extract better with the B pulse setting.
- High-yield coffees typically extract better with the C pulse setting. Of course, any of the A, B or C settings may be used to suit your taste profile.
- Settings D and E are manual pulse counts.

Display Brew Time - turns the display of the brew time during brewing on or off (the factory default is ON). Once accessed, press ◄ or ► to choose the desired setting, then press ⊙ to exit.

FreshTrac-Glass - (Alpha FreshTrac units only) allows the operator to control when the FreshTrac LED on the decanter will flash. Once accessed, press ◄ or ► to change the amount of time (the factory default is 30 minutes), then press ⊙ to exit.

Programming Options (cont.)

Drip-out Mode - sets the drip-out mode timer. After water stops flowing, it allows additional time for the water to drain from the brew basket before the brew basket lock releases (the factory default is 2 min.). This feature reduces the chance that the brew basket will be removed too early. The range is OFF to 5 minutes. Once accessed, press ◄ or ► to choose desired setting, then, press ⊙ to exit.

Display Messages - turns display of the message “Rinse Server Before Brewing” ON or OFF (the factory default is ON). Once accessed, press ◄ or ► to choose the desired setting, then press ⊙ to exit.

Language- changes the language that appears on the display (the factory default is English).Once accessed, press ◄ or ► to choose the desired setting (English or French), then press ⊙ to set and exit.

Model Select - changes the model number and number of batches (to match the label on the universal control module, the factory default is Alpha 3/4/5). Once accessed, press ◄ or ► until the model number matching the model number label on the brewer appears, then press ⊙. Press ◄ or ► until the number of batches matches the number of batch sizes on the UCM label, then press ⊙ to exit.

D500 Airpot Coffee Brewers

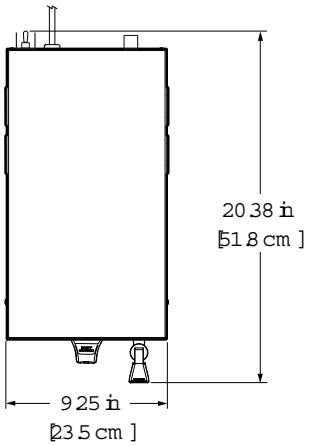

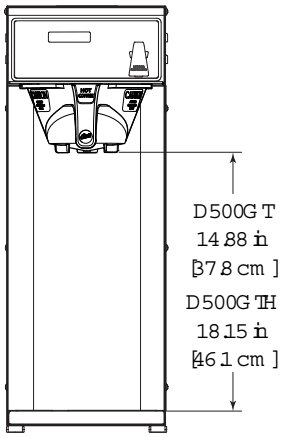

with WC-3621-101 brew basket

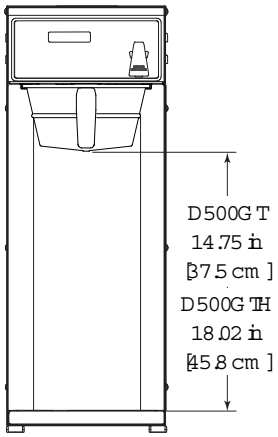

with WC-3316 brew basket

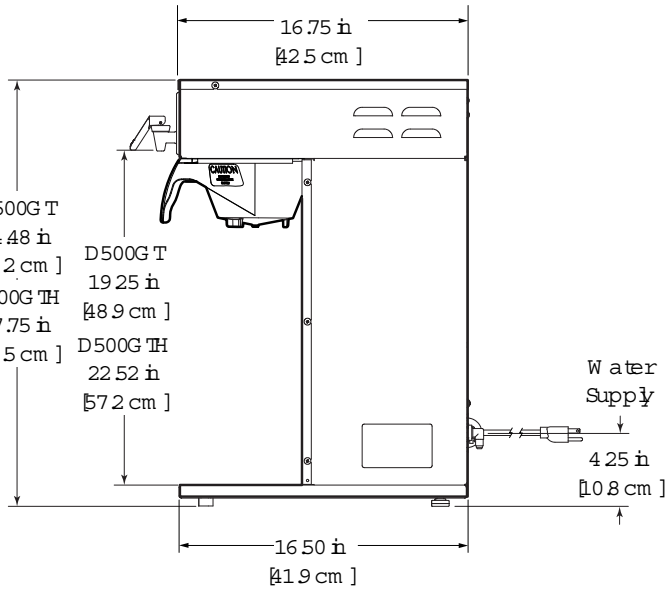

Supplies and Accessories - All Models



WC-29025 - Spray Head



CAB-1 - Cleaning Brush

D500GT/ D500GTH - Main Chassis - Exploded View

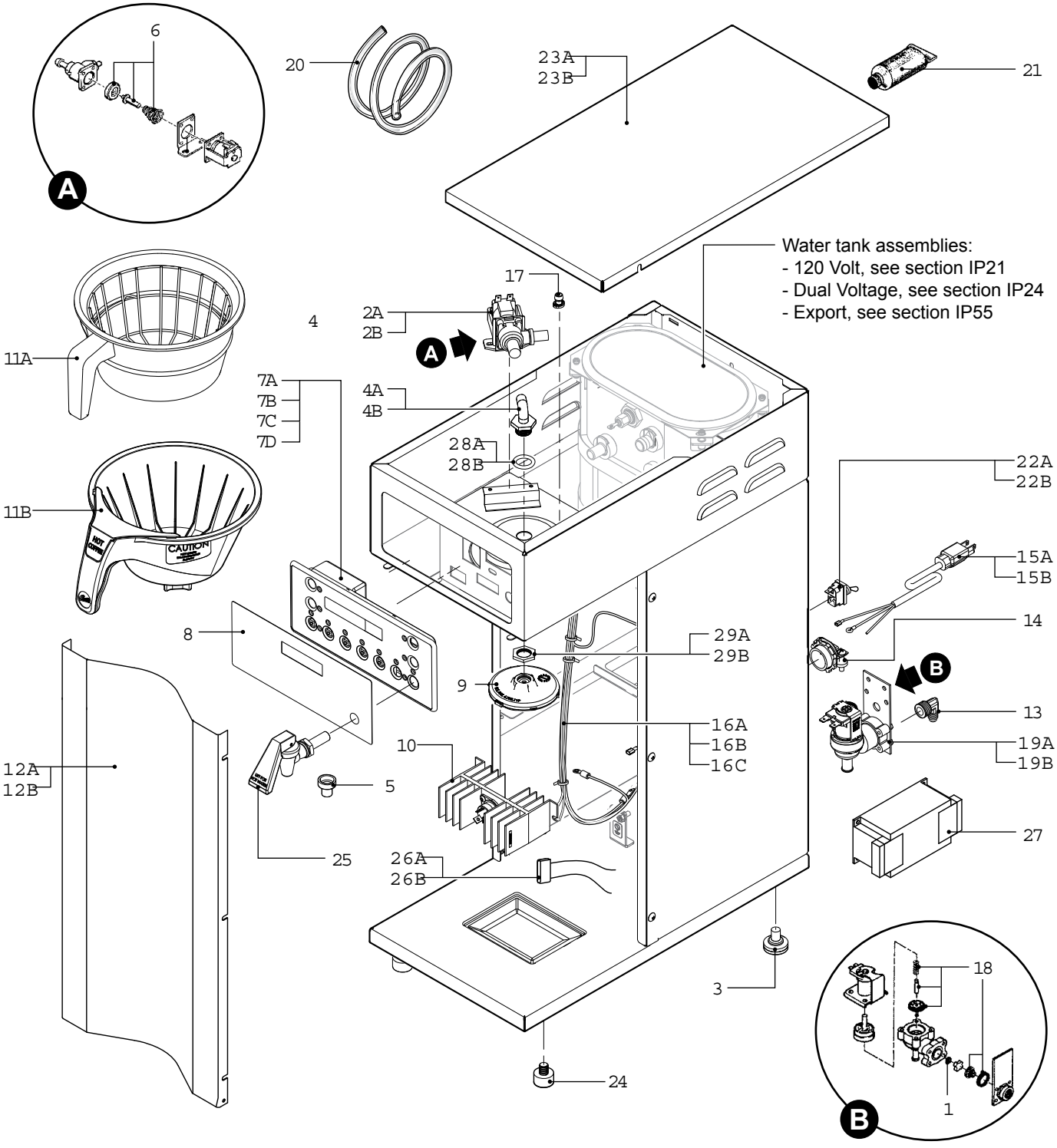

D500GT/ D500GTH - Main Chassis - Parts List

ITEM #	PART #	DESCRIPTION
1	WC-830	FLOW WASHER, 1.0 GPM 1/2" DIA. USE ON WC-826
2A	WC-889 [1,2,4,5]	VALVE, DUMP LEFT 120V 12W ALPHA'S/D1000/ GEM-12/TLP
2B	WC-860 [3]	VALVE, DUMP LEFT 240V 12W
3	WC-3518	LEG, GLIDE 3/8"-16 STUD SCREW
4A	WC-2962K [a]	KIT, FITTING SPRAYHEAD SS
4B	WC-2962-101K [b]	KIT, FITTING SPRAYHEAD KYNAR
5	WC-1806	SEAT CUP, SILICONE USE ON WC-1809 FAUCET
6	WC-3763	KIT, DUMP VALVE FOR DELTROL WC-820WDR,WC-821WDR, WC-844WDR
7A	WC-774 [1,2,4,5]	CONTROL MODULE, UCM 120V ALPGT/D500GT/ D60GT
7B	WC-724 [3]	CONTROL MODULE, UCM 220V ALPGT D500GT/ D60GT
7C	WC-37064 [1,2,4,5]	KIT, LABEL & UCM D500GT/H THERMAL ALPHA CURTIS (INCLUDES ITEMS 7A AND 8)
7D	WC-37348 [3]	KIT, LABEL & UCM D500GT 220V (INCLUDES ITEMS 7B AND 8)
8	WC-39346	LABEL, UCM OVERLAY D500GT/H D60GT CURTIS
9	WC-29025	SPRAYHEAD, PURPLE ADVANCE FLOW
10	WC-8556	HEATSINK, ASSY DV ALPDS/D500AP TCTD/ PTTD
11A	WC-3316	BREW CONE, W/HANDLE ASSY 7.1"D.W/WC-3317 & WC-3323 ALP/AP
11B	WC-3621-101	BREW CONE, NON-METAL UNIVERSAL (WITH SPLASH POCKET)
12A	WC-6217 [1,3,4]	COVER, FRONT SS D500GT
12B	WC-6225 [2,5]	COVER, FRONT C250/C/D500-APT
13	WC-2401K	KIT, ELBOW 3/8 NPT X 1/4 FLARE
14	WC-1412	CORD GRIP, 3/4" FOR METAL CORD TO .81"OD
15A	WC-1200 [1,2,4,5]	CORD, 14/3 SJTO 6' BLK W/PLUG
15B	WC-1231-102 [3]	CORD, 2.5 mm² 90ºC 36A 450/750 V STRIPPED W/FERRULES ONE END
16A	WC-13237 [1,2]	HARNESS, ASSY D500GT/H-10
16B	WC-13282 [3]	HARNESS ASSY, D500GT/H-30 (TERMINAL BLOCK INCLUDED)
16C	WC-13322 [4,5]	HARNESS, ASSY D500GT/H-63 DUAL VOLTAGE (TERMINAL BLOCK INCLUDED)
17	WC-29044	SLEEVE, OVERFLOW ASSY GEN USE
18	WC-3765L	KIT, INLET VALVE REPAIR USE ON WC-826/WC-826L/WC-847 (OLDER UNITS)
19A	WC-826L [1,2,4,5]	VALVE, INLET 1 GPM 120V 9W
19B	WC-856 [3]	VALVE, INLET 1 GPM 240V 6W
20	WC-5310	TUBE, 5/16 ID x 1/8W SILICONE GEN USE
21	WC-5231	COMPOUND, SILICONE 5 OZ
22A	WC-102 [1,2]	SWITCH, TOGGLE NON-LIT SPST 15A 125/6A 250VAC RESISTIVE
22B	WC-103 [3,4,5]	SWITCH, TOGGLE NON-LIT DPST 25A 125/250VAC RESISTIVE
23A	WC-58117	COVER, TOP ALPGT/D500GT/D60GT TLP/TCTS/ CBS/GEMSS
23B	WC-5450	COVER, TOP ALPHA-1DS,3DSL,3DSR GEM-120A/200R/230A/300IL/600IL (OLDER MODELS)
24	WC-3503	LEG, 3/8"-16 STUD SCREW BUMPER
25	WC-37252	KIT, HOT WATER FAUCET REPLACEMENT ALPGT/D60GT/D500GT
26A	WC-8591 [1,2,4,5]	CAPACITOR, X2 USED ON ALL ADS MODELS
26B	WC-8609 [3]	CAPACITOR, 2.2 UF 250/275 VACS 50/60 ALL ARU'S
27	WC-596K [3]	KIT, NOISE FILTER EMI 250V/30A 1PH
28A	WC-4320 [a]	O'RING, 0.487I.D.x 0.693OD x0.103CS BUNA-N #112
28B	WC-43089 [b]	GASKET, 1.00OD X .625 I.D. X .030 THK WHITE EPDM 70 SHORE
29A	WC-4213 [a]	NUT, 5/8 LOCK PLATED
29B	WC-4212-02 [b]	NUT, 5/8-18 JAM PLASTIC
30	WC-314 [3,4,5]	POWER BLOCK, 5 STATION (NOT SHOWN)

[1] D500GT12, [2] D500GTH12, [3] D500GT30, [4] D500GT63, [5] D500GTH63

[a] Newer units. Stainless steel fitting kit (4A) is compatible with older units.
[b] Older units.

D500GT/ D500GTH - Recommended Parts to Stock

ITEM #	PART #	DESCRIPTION
2A	WC-889	VALVE, DUMP LEFT 120V 12W ALPHA'S/D1000/ GEM-12/TLP
6	WC-3763	KIT, DUMP VALVE FOR DELTROL WC-820WDR,WC-821WDR, WC-844WDR
7C	WC-37064	KIT, LABEL & UCM D500GT/H THERMAL ALPHA CURTIS (INCLUDES ITEMS 7A AND 8)
9	WC-29025	SPRAYHEAD, PURPLE ADVANCE FLOW
18	WC-3765L	KIT, INLET VALVE REPAIR USE ON WC-826/WC-826L/WC-847 (OLDER UNITS)
19A	WC-826L	VALVE, INLET 1 GPM 120V 9W
20	WC-5310	TUBE, 5/16 ID x 1/8W SILICONE GEN USE
21	WC-5231	COMPOUND, SILICONE 5 OZ
22	WC-103	SWITCH, TOGGLE NON-LIT DPST 25A 125/250VAC RESISTIVE
26	WC-8591	CAPACITOR, X2 USED ON ALL ADS MODELS

WC-6277/WC-75236[-20] - Tank Assembly

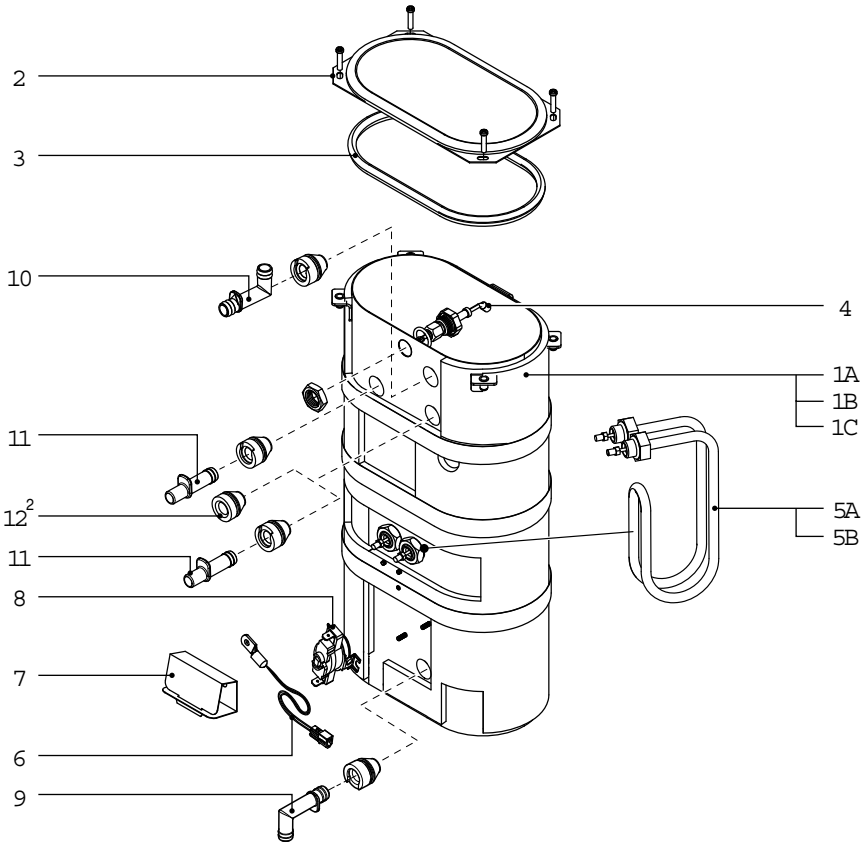

WC-6277/WC-75236[-20] - Tank Assembly - Parts List

ITEM #	PART #	DESCRIPTION
1A	WC-6277	TANK, COMPLETE 1600W 120V D500GT/TCTS/ PTT/CBS
1B[1]	WC-75236	TANK, ASSY D500GT/H/TCTS/PTT3/ CBS W/WC-904 HEATING ELEMENT
1C[3]	WC-75236-20	TANK, ASSY D500GT/H/TCTS/PTT3/CBS W/WC- 917 HEATING ELEMENT
2	WC-5853-102	COVER, TOP HEATING TANK GEN USE
3	WC-43062	GASKET, TANK LID
4	WC-5527K	KIT, PROBE WATER LEVEL O-RING & NUT
5A	WC-904-04	KIT,ELEMENT, HEATING 1.6KW120V W/ JAM NUT & SILICONE O-RING
5B	WC-917	ELEMENT, HEATING 1.45KW 120V W/JAM NUTS

ITEM #	PART #	DESCRIPTION
6	WC-1438-101	SENSOR, TEMPERATURE TANK
7	WC-4394	GUARD, SHOCK/HEATING ELEMENT FOR SINGLE HEATING ELEMENT
8	WC-523	THERMOSTAT, MANUAL RESET 120/ 240 VAC 25A 220 DEG F MAX
9	WC-37365	KIT, FITTING TANK INLET
10	WC-37266	KIT, FITTING TANK OVERFLOW
11	WC-37317	KIT, STRAIGHT FITTING & BUSHNG 8mm GEN USE
12[2]	WC-2630	BUSHING, CONICAL BLIND GEN USE

[1] For units without hot water faucet, specify that item 12 be installed in location shown when ordering

[2] For units without hot water faucet

[3] Canadian units

WC-6277/WC-75236[-20] - Recommended Parts to Stock

ITEM #	PART #	DESCRIPTION
3	WC-43062	GASKET, TANK LID
4	WC-5527K	KIT, PROBE WATER LEVEL O-RING & NUT
5A	WC-904-04	KIT,ELEMENT, HEATING 1.6KW120V W/ JAM NUT & SILICONE O-RING
6	WC-1438-101	SENSOR, TEMPERATURE TANK
7	WC-4394	GUARD, SHOCK/HEATING ELEMENT FOR SINGLE HEATING ELEMENT

ITEM #	PART #	DESCRIPTION
8	WC-523	THERMOSTAT, MANUAL RESET 120/ 240 VAC 25A 220 DEG F MAX
9	WC-37365	KIT, FITTING TANK INLET
10	WC-37266	KIT, FITTING TANK OVERFLOW
11	WC-37317	KIT, STRAIGHT FITTING & BUSHNG 8mm GEN USE

WC-6282 - Tank Assembly

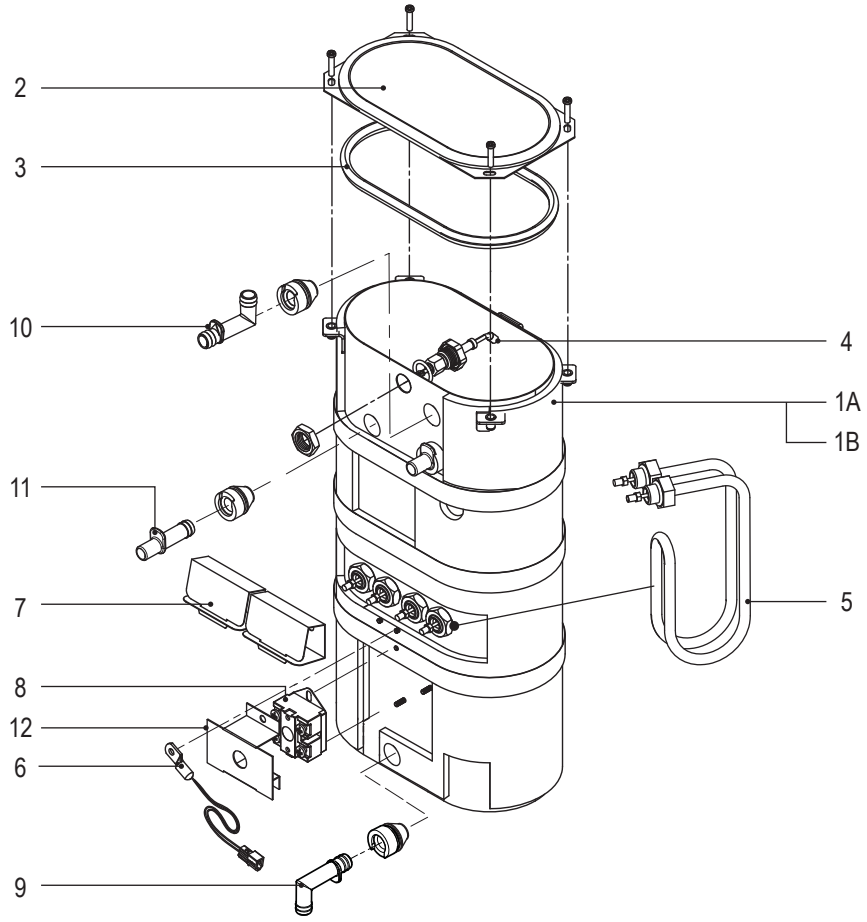

WC-6282 - Tank Assembly - Parts List

ITEM #	PART #	DESCRIPTION
1A	WC-75236DV	TANK, ASSY DUAL VOLTAGE D500GT TCTS/PTT3/ CBS/ W/(2)WC-904
1B	WC-6282	TANK, COMPLETE D500GT DUAL VOLTAGE 120/220V
2	WC-5853-102	COVER, TOP HEATING TANK GEN USE
3	WC-43062	GASKET, TANK LID
4	WC-5527K	KIT, PROBE WATER LEVEL O-RING & NUT
5	WC-904-04	KIT,ELEMENT, HEATING 1.6KW120V W/ JAM NUT & SILICONE O-RING
6	WC-1438-101	SENSOR, TEMPERATURE TANK

ITEM #	PART #	DESCRIPTION
7	WC-4394	GUARD, SHOCK/HEATING ELEMENT FOR SINGLE HEATING ELEMENT
8	WC-522	THERMOSTAT, HI LIMIT HEATER CONTROL DPST 277V 40A
9	WC-37365	KIT, FITTING TANK INLET
10	WC-37266	KIT, FITTING TANK OVERFLOW
11	WC-37317	KIT, STRAIGHT FITTING & BUSHNG 8MM GEN USE
12	WC-43055	GUARD, SHOCK RESET THERMOSTAT (WC-522)

WC-6282 - Recommended Parts to Stock

ITEM #	PART #	DESCRIPTION
3	WC-43062	GASKET, TANK LID
4	WC-5527K	KIT, PROBE WATER LEVEL O-RING & NUT
5	WC-904-04	KIT,ELEMENT, HEATING 1.6KW120V W/ JAM NUT & SILICONE O-RING
6	WC-1438-101	SENSOR, TEMPERATURE TANK

ITEM #	PART #	DESCRIPTION
9	WC-37365	KIT, FITTING TANK INLET
10	WC-37266	KIT, FITTING TANK OVERFLOW
11	WC-37317	KIT, STRAIGHT FITTING & BUSHNG 8MM GEN USE
12	WC-43055	GUARD, SHOCK RESET THERMOSTAT (WC-522)

WC-6290 - Tank Assembly

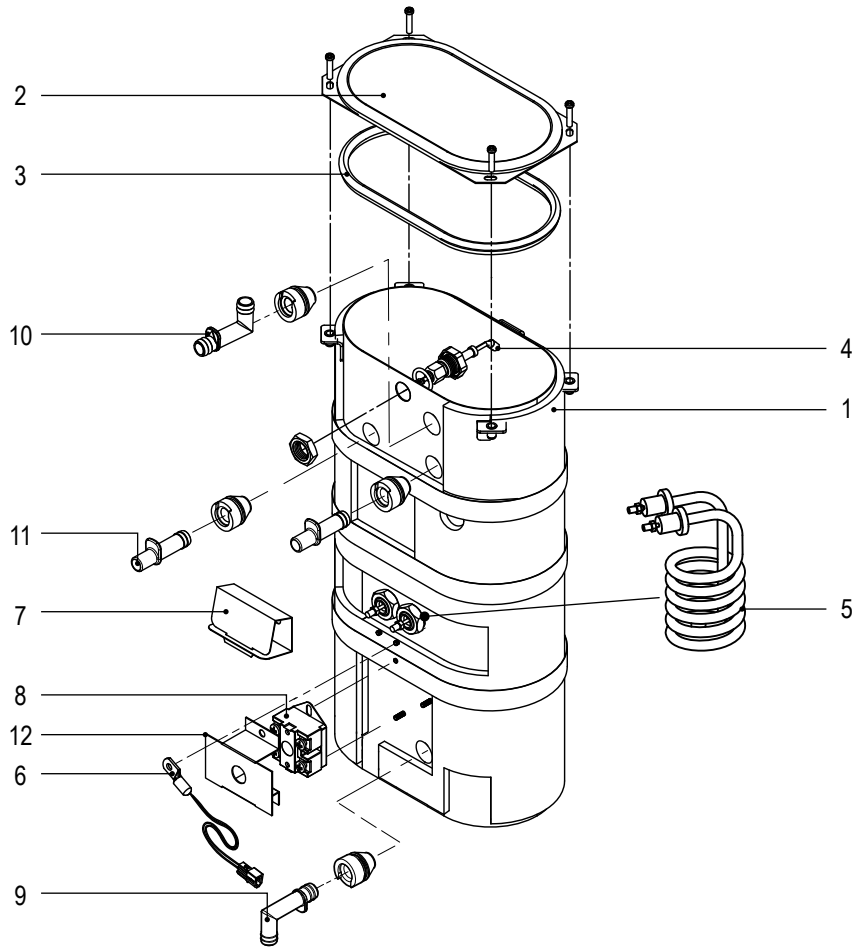

WC-6290 - Tank Assembly - Parts List

ITEM #	PART #	DESCRIPTION
1	WC-6290	TANK, COMPLETE 3.5KW 220V D500-GT
2	WC-5853-102	COVER, TOP HEATING TANK GEN USE
3	WC-43062	GASKET, TANK LID
4	WC-5527K	KIT, PROBE WATER LEVEL O-RING & NUT
5	WC-922	ELEMENT, HEATING 3.5KW 220V GEN USE
6	WC-1438-101	SENSOR, TEMPERATURE TANK
7	WC-4394	GUARD, SHOCK/HEATING ELEMENT FOR SINGLE HEATING ELEMENT

ITEM #	PART #	DESCRIPTION
8	WC-522	THERMOSTAT, HI LIMIT HEATER CONTROL DPST 277V 40A
9	WC-37365	KIT, FITTING TANK INLET
10	WC-37266	KIT, FITTING TANK OVERFLOW
11	WC-37317	KIT, STRAIGHT FITTING & BUSHNG 8MM GEN USE
12	WC-43055	GUARD, SHOCK RESET THERMOSTAT (WC-522)

WC-6290 - Recommended Parts to Stock

ITEM #	PART #	DESCRIPTION
3	WC-43062	GASKET, TANK LID
4	WC-5527K	KIT, PROBE WATER LEVEL O-RING & NUT
6	WC-1438-101	SENSOR, TEMPERATURE TANK
9	WC-37365	KIT, FITTING TANK INLET

ITEM #	PART #	DESCRIPTION
10	WC-37266	KIT, FITTING TANK OVERFLOW
11	WC-37317	KIT, STRAIGHT FITTING & BUSHNG 8MM GEN USE
12	WC-43055	GUARD, SHOCK RESET THERMOSTAT (WC-522)

D500GT12, D500GTH12

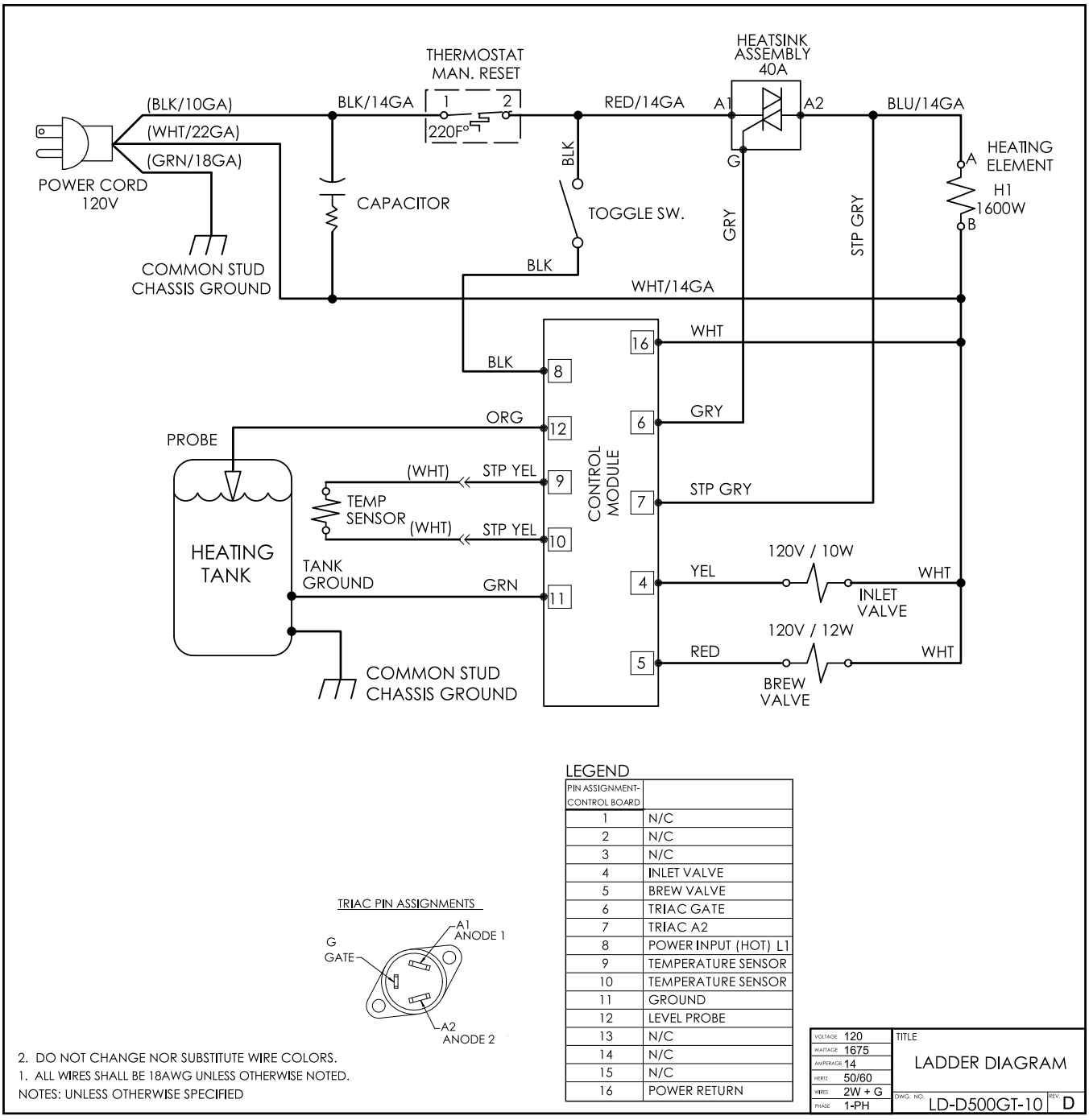

LEGEND

PIN ASSIGNMENT-CONTROL BOARD	
1	N/C
2	N/C
3	N/C
4	INLET VALVE
5	BREW VALVE
6	TRIAC GATE
7	TRIAC A2
8	POWER INPUT (HOT) L1
9	TEMPERATURE SENSOR
10	TEMPERATURE SENSOR
11	GROUND
12	LEVEL PROBE
13	N/C
14	N/C
15	N/C
16	POWER RETURN

TRIAC PIN ASSIGNMENTS

2. DO NOT CHANGE NOR SUBSTITUTE WIRE COLORS.
1. ALL WIRES SHALL BE 18AWG UNLESS OTHERWISE NOTED.
NOTES: UNLESS OTHERWISE SPECIFIED

VOLTAGE	120
WATTAGE	1675
AMPERAGE	14
HERTZ	50/60
WIRES	2W + G
PHASE	1-PH

TITLE: LADDER DIAGRAM

DWG. NO. LD-D500GT-10 REV. D

D500GT63, D500GTH63

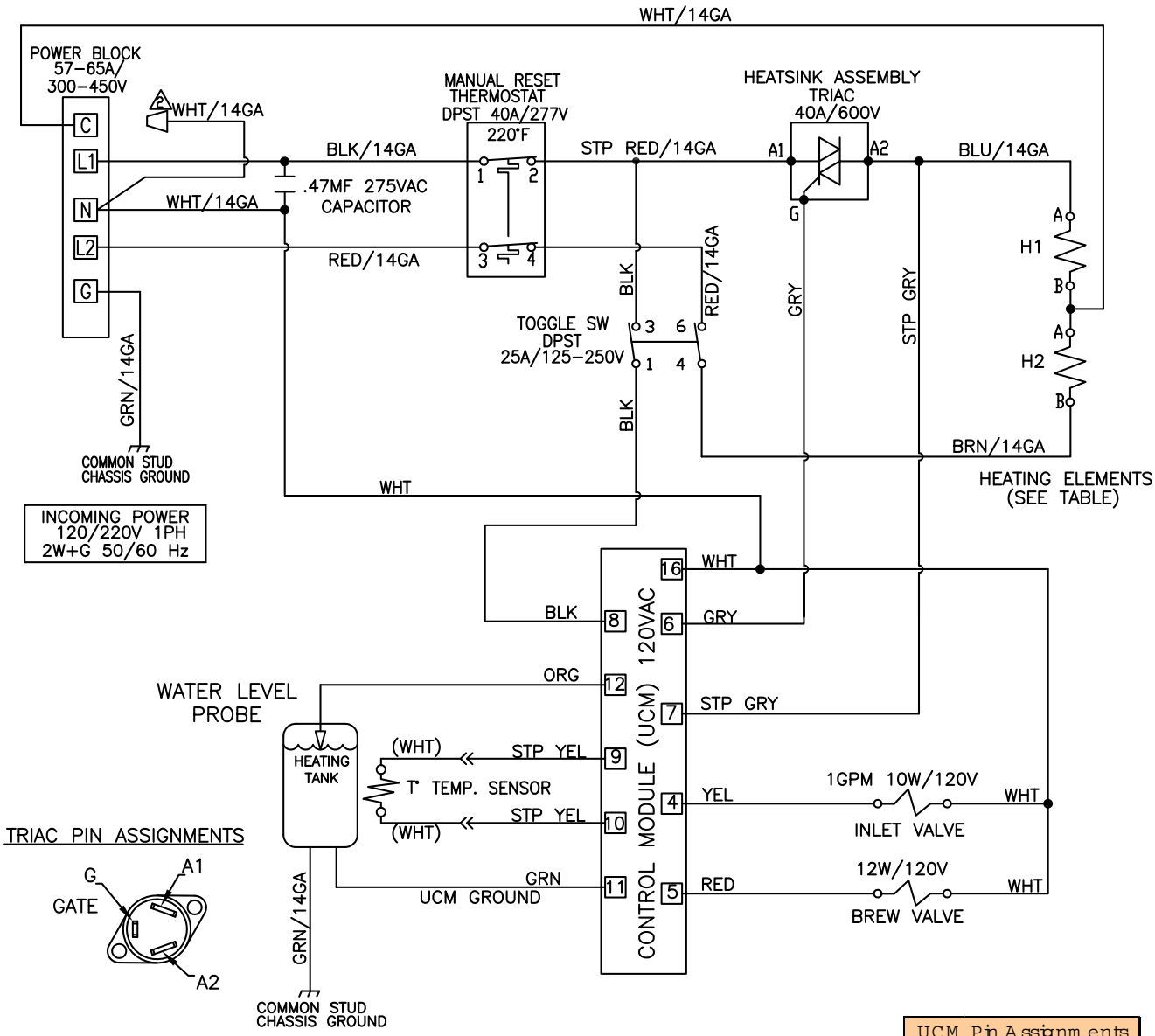

ELECTRICAL RATING TABLE								
Model	Voltage V	Amps A	Watts W	Hertz Hz	# of Conductor Wires	Phase	# of Tank Elements	Tank Element Rating W/V
D500GT5x	120	12.5	1500	50/60	(2)	1	2	1450W/120V
	110/220	11.1	2450		3			
	120/240	12.1	2915					
D500GT6x	120	13.6	1600		(2)			1600W/120V
	110/220	12.0	2700		3			
	120/240	13.4	3915					

UCM Pin Assignments	
16 Pin Connector	
1	NOTUSED
2	NOTUSED
3	NOTUSED
4	INLETVALVE
5	BREW VALVE
6	GATE,TRAC
7	TRAC A2
8	POWER INPUT
9	TANK TEMPERATURE SENSOR
10	TANK TEMPERATURE SENSOR
11	UCM GROUND
12	WATER LEVEL PROBE
13	NOTUSED
14	NOTUSED
15	NOTUSED
16	POWER RETURN

3. USE THIS DIAGRAM FOR ALL OTHER MODELS WITH ADDED PREFIX AND/OR DIFFFERENT ENDING NUMBERS ON THEIR PART NUMBERS AND WITH EQUIVALENT ELECTRICAL RATINGS.

2 * FOR USE WITH 120V (FACTORY DEFAULT): REMOVE CAP FROM JUMPER WIRE & CONNECT TO POINT 'C' ON TERMINAL BLOCK.
* FOR USE WITH 220V: DISCONNECTJUMPER WIRE FROM POINT 'C' AND CAP IT.

1. ALL WIRES SHALL BE MIN 18AWG PVC PER UL1015.

NOTE: UNLESS OTHERWISE SPECIFIED

VOLTAGE:	SEE TABLE
WATTAGE:	SEE TABLE
AMPERAGE:	SEE TABLE
HERTZ:	SEE TABLE
WIRES:	2W/3W+G
PHASE:	1-PHASE

TITLE: LADDER DIAGRAM

PART NUMBER: LD-D500GT-63

REVISION: J

D500GT30,

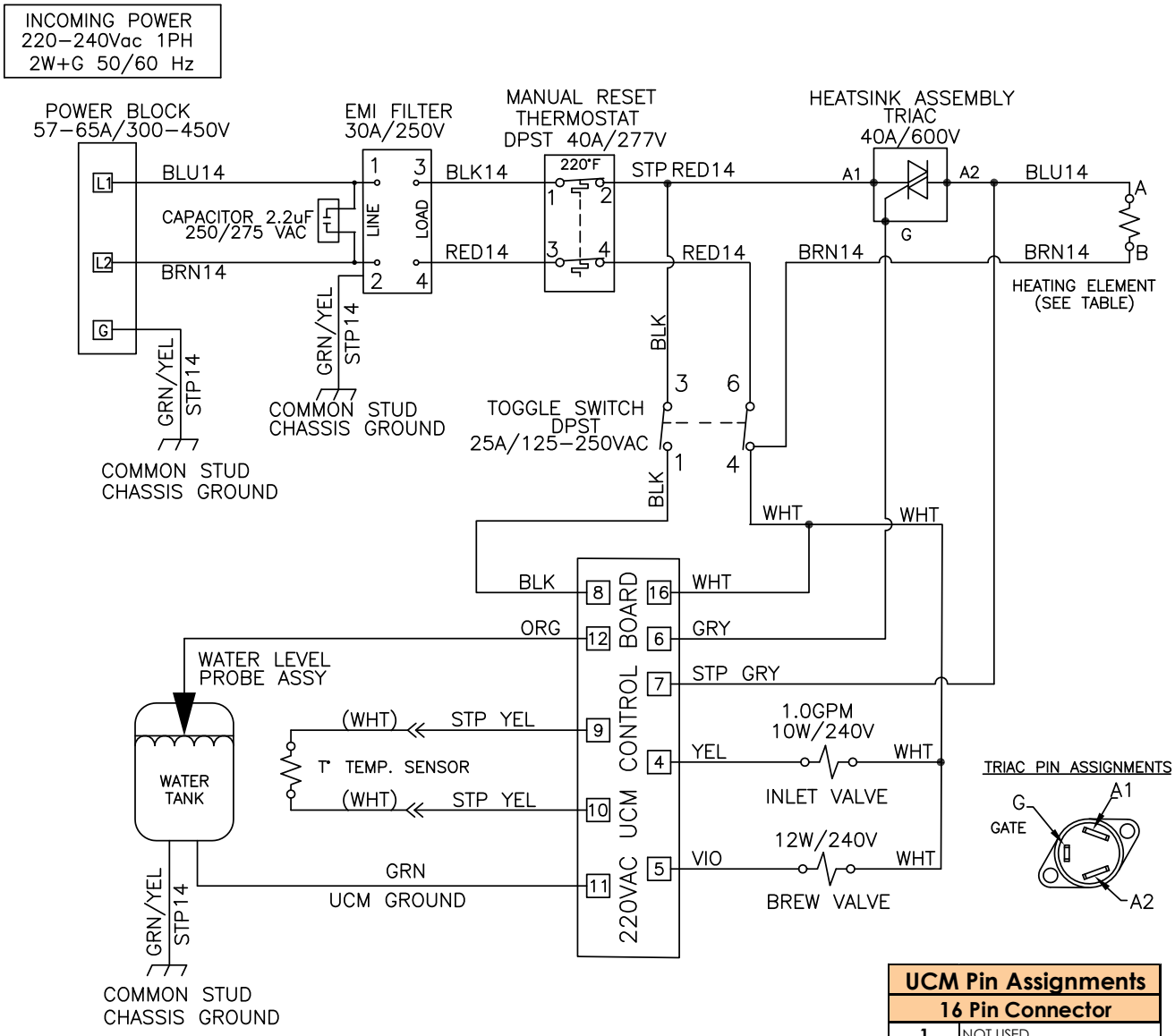

ELECTRICAL RATING TABLE								
Model	Voltage V	Amps A	Watts W	Hertz Hz	# of Conductor Wires	Phase	# of Tank Elements	Tank Element Rating W/V
D500GT30Ax D500GT30Bx D500GTH30Ax	220	16.0	3550	50/60	2	1	1	3500W/220V
D500GT30Ax D500GT30Bx D500GTH30Ax	230	16.9	3880					
D500GT30Ax D500GT30Bx D500GTH30Ax	240	17.6	4225					

UCM Pin Assignments	
16 Pin Connector	
1	NOT USED
2	NOT USED
3	NOT USED
4	INLET VALVE
5	BREW VALVE
6	TRIAC GATE
7	TRIAC A2
8	230V L1
9	TANK TEMPERATURE SENSOR
10	TANK TEMPERATURE SENSOR
11	UCM GROUND
12	WATER LEVEL PROBE
13	NOT USED
14	NOT USED
15	NOT USED
16	230V L2

2. USE THIS DIAGRAM FOR ALL OTHER MODELS WITH ADDED PREFIX AND/OR DIFFFERENT ENDING NUMBERS ON THEIR PART NUMBERS AND WITH EQUIVALENT ELECTRICAL RATINGS.

1 ALL WIRES SHALL BE MIN 18AWG PVC PER UL1015.

NOTE: UNLESS OTHERWISE SPECIFIED

VOLTAGE:	SEE TABLE
WATTAGE:	SEE TABLE
AMPERAGE:	SEE TABLE
HERTZ:	SEE TABLE
WIRES:	2W+G
PHASE:	1–PHASE

TITLE: LADDER DIAGRAM D500GT

PART NUMBER: LD–D500GT–30

REVISION: F

WARNING:

Electric Shock Hazard - the following procedures are to be performed only by a qualified service technician. Turn off power when replacing components. Neither Wilbur Curtis Co., Inc. nor the seller can be held responsible for the interpretation of this information, or any liability in connection with its use.

Scald and Burn Hazard - keep body parts clear of hot surfaces during troubleshooting.

IMPORTANT: If it is necessary to replace the G3 universal control module (UCM), always check all inlet, dump (brew), bypass* and dilution* valve coils for a short and replace the valve as necessary, before replacing the module. See the ***Valve Test Procedure***, below to test for defective valves. *Some units do not have this function, see the ELECTRICAL SCHEMATIC.

Troubleshooting Guidelines

- If an error message appears on the display, consult the ERROR CODES section before troubleshooting.
- A brewer that is not level may not function properly. Make sure the brewer is properly leveled before proceeding.
- This troubleshooting guide identifies some, but not all, of the possible causes for common problems that can occur.
- Use this troubleshooting guide along with the appropriate ELECTRICAL SCHEMATIC.

Valve Test Procedure

Use a digital multi-meter to measure the resistance of valve coils.

Measure the resistance across the valve coil terminals with the wiring harness disconnected. Reverse the meter leads on the terminals and measure the resistance in the opposite direction. A resistance of less than 100 ohms, in either direction, indicates a shorted coil. The valve must be replaced.

If a shorted coil is not detected, test for an open coil:

1 Reconnect the valve terminals to the wiring harness.

2 Power up the brewer with the appropriate cover removed to allow access to the valve.

3 Run a brew cycle while monitoring the voltage at the valve coil terminals. If voltage is present on the terminals, you should hear the valve click open/closed at the moment power is applied or removed from the terminals. The inlet valve should open any time the water tank is not full. If the valve does not open, replace the valve. If voltage is not detected, first check the wiring. If the wiring is OK, replace the UCM.

Water Not Hot Enough

1 If the water heats, but is not hot enough, first check for the correct temperature setting on the control panel. Reprogram as necessary.

2 If the temperature setting is OK, and the actual water temperature does not match setting on the control panel, replace the temperature sensor.

Water Heats More Slowly Than Usual

1 Check for power across the terminals of the heating element(s). If power is being supplied, disconnect the heating element(s) and check for continuity. Replace a heating element if the resistance is too high (nominal resistance is 13 Ohms).

2 If there is no power to the heating element(s), check the wiring to any element that does not have the proper voltage across it. Also check for corroded connections anywhere between the power cord and the heating element(s).

Water Does Not Heat At All

- Check to see if the water level in the tank is in contact with the water level probe. If not, see *Tank Does Not Fill*. The water will not heat unless it is in contact with the probe.
- If the water heats, but is not hot enough, see *Water Not Hot Enough*.
- If **Ready to brew** appears on the display, but the water is not hot, check the resistance across the leads of the temperature sensor. If the resistance is less than 10 k and the water is not hot, replace the temperature sensor. If the sensor resistance is above 10 k when the water is cool, replace the universal control module (UCM).

If **Heating...** appears on the display, but the water is not hot, follow the steps below. The following steps are performed with the rear toggle switch in the ON position.

1 Check for power across the terminals of the heating element(s). If power is being supplied, remove the wires and check for an open heating element.

2 If there is no power to the element(s), trace the circuit back (using the ELECTRICAL SCHEMATIC) to the power cord to find out where power is lost. If there is power into the triac but not out, see the following step.

3 If there is power into a triac, but not out, check for power at the gate terminal. Also check the wire to A2 from the UCM. If the connections are good and power is being supplied to the triac, but there is no voltage out of A2, replace the triac. If power is not being supplied from the UCM, but **Heating...** appears on the display, check the wiring from the UCM to the triac. If the wiring is OK, replace the UCM.

Water Too Hot (Boiling or Excessive Steaming)

IMPORTANT: Before proceeding, make sure that the control panel temperature is adjusted to compensate for higher elevations. The factory setting is 200°F (93°C). Reduce the temperature setting two degrees for every 1000 feet of elevation.

1 If **Over Temp Sensor** or **Ready to Brew** appears on the display and the water is too hot, go to *Over Temp Sensor Error Message*.

2 If the display reads **Heating** constantly, first check to make sure that the temperature sensor is attached tightly to the tank and that heat sink compound was used. A properly mounted sensor should have a resistance of around 7 k when the water is hot. If not, replace the sensor.

3 Check to see if the universal control module (UCM) constantly has power output to the triac, regardless of the resistance of the temperature sensor. If so, the UCM is probably bad.

4 If the UCM is working properly, check for a bad triac.

Over Temp Sensor Error Message

This error message indicates that the universal control module (UCM) has detected a water overheating problem. The UCM is reading a water temperature in the tank above 210°F (99°C). If the water temperature is too hot, but **Heating...** appears on the display, see *Water Too Hot*. Once the malfunction causing the error is corrected, the error message must be cleared. To reset the brewer and return to normal operation, turn the toggle switch on the back of the brewer to the OFF position for 5 seconds, then back on.

1 Check for power at the gate terminal on the triac. If there is no power at the triac gate terminal but the heating elements are always on, replace the triac.

2 Turn off power to the brewer and allow water tank to cool. Once cool, turn power back on while monitoring the triac gate voltage. During normal operation, power should be applied to the gate terminal, then drop to below 1 Vac. The universal control module (UCM) should be replaced if power is applied to the triac gate constantly even though **Ready to brew** or **Over Temp Sensor** appears on the display.

3 If the UCM is operating normally, check for a false over-temp error caused by the temperature sensor. Check the resistance across the leads of the temperature sensor. If the resistance is less than 10 k when the water is cool, replace the temperature sensor.

System Fault Messages

An error message will appear on the screen in the event of a malfunction under the following conditions:

1 Water level overflow. This error indicates that either there is not enough incoming water flow/pressure or a water overflow condition (unit will stop functioning).

2 Break in temperature control circuit.

3 Excess temperature in heating tank.

If any of the errors below appear on the screen, turn off the main power toggle switch and call for service.

ERROR MESSAGE	WARNING DESCRIPTION	CAUSE
Water Level Error	Fill run error/Overflow	The water inlet valve has either been open for more than 10 minutes on the initial tank fill or has been open for more than 30 seconds* in normal operation.
Sensor Error	Open Probe	Break in the temperature thermistor circuit.
Over Temp. Error	Excess Temperature	The sensor is reading that temperature in the heating tank has risen above 210ºF (99°C).

* 120 seconds for models with water tanks larger than 2 gallons.

Wilbur Curtis Co., Inc. certifies that its products are free from defects in material and workmanship under normal use. The following limited warranties and conditions apply:

3 years, parts and labor, from original date of purchase on digital control boards
2 years, parts, from original date of purchase on all other electrical components, fittings and tubing
1 year, labor, from original date of purchase on all other electrical components, fittings and tubing

Additionally, Wilbur Curtis Co., Inc. warrants its grinding burrs for forty (40) months from the date of purchase or 40,000 pounds of coffee, whichever comes first. Stainless steel components are warranted for two (2) years from the date of purchase against leaking or pitting. Replacement parts are warranted for ninety (90) days from the date of purchase or for the remainder of the limited warranty period of the equipment in which the component is installed.

All in-warranty service calls must have prior authorization. For authorization, call the Technical Support Department at 800-995-0417. Additional conditions may apply. Go to www.wilburcurtis.com to view the full product warranty information.

CONDITIONS & EXCEPTIONS

The warranty covers original equipment at time of purchase only. Wilbur Curtis Co., Inc., assumes no responsibility for substitute replacement parts installed on Curtis equipment that have not been purchased from Wilbur Curtis Co., Inc. Wilbur Curtis Co., Inc. will not accept any responsibility if the following conditions are not met. The warranty does not cover:

- **Adjustments and cleaning:** *The resetting of safety thermostats and circuit breakers, programming and temperature adjustments are the responsibility of the equipment owner. The owner is responsible for proper cleaning and regular maintenance of this equipment.*
- **Replacement of items subject to normal use and wear:** *This shall include, but is not limited to, spray heads, faucets, light bulbs, shear disks, "O" rings, gaskets, silicone tubing, silicone elbows, canister assemblies, whipper chambers and plates, mixing bowls, agitation assemblies and whipper propellers.*

The warranty is void under the following circumstances:

- **Improper operation of equipment:** *The equipment must be used for its designed and intended purpose and function.*
- **Improper installation of equipment:** *This equipment must be installed by a professional technician and must comply with all local electrical, mechanical and plumbing codes.*
- **Improper voltage:** *Equipment must be installed at the voltage stated on the serial plate supplied with this equipment.*
- **Improper water supply:** *This includes, but is not limited to, excessive or low water pressure and inadequate or fluctuating water flow rate.*
- **Damaged in transit:** *Equipment damaged in transit is the responsibility of the freight company and a claim should be made with the carrier.*
- **Abuse or neglect (including failure to periodically clean or remove lime accumulations):** *The manufacturer is not responsible for variation in equipment operation due to excessive lime or local water conditions. The equipment must be maintained according to the manufacturer's recommendations.*

Repairs and/or Replacements are subject to Curtis' decision that the workmanship or parts were faulty and the defects showed up under normal use. All labor shall be performed during regular working hours. Overtime charges are the responsibility of the owner. Charges incurred by delays, waiting time, or operating restrictions that hinder the service technician's ability to perform service is the responsibility of the owner of the equipment. This includes institutional and correctional facilities. Wilbur Curtis Co., Inc. will allow up to 100 miles, round trip, per in-warranty service call.

Return Merchandise Authorization (RMA): All claims under this warranty must be submitted to the Wilbur Curtis Technical Support Department prior to performing any repair work or return of this equipment to the factory. **All returned equipment must be properly re-packaged in the original carton and received by Curtis within 45 days following the issuance of a RMA.** No units will be accepted if they are damaged in transit due to improper packaging. **NO UNITS OR PARTS WILL BE ACCEPTED WITHOUT A RETURN MERCHANDISE AUTHORIZATION (RMA). THE RMA NUMBER MUST BE MARKED ON THE CARTON OR SHIPPING LABEL. All warranty claims must be submitted within 60 days of service. Invoices will not be processed or accepted without a RMA number. Any defective parts must be returned in order for warranty invoices to be processed and approved.** All in-warranty service calls must be performed by an authorized service agent. Call the Wilbur Curtis Technical Support Department to find an agent near you.