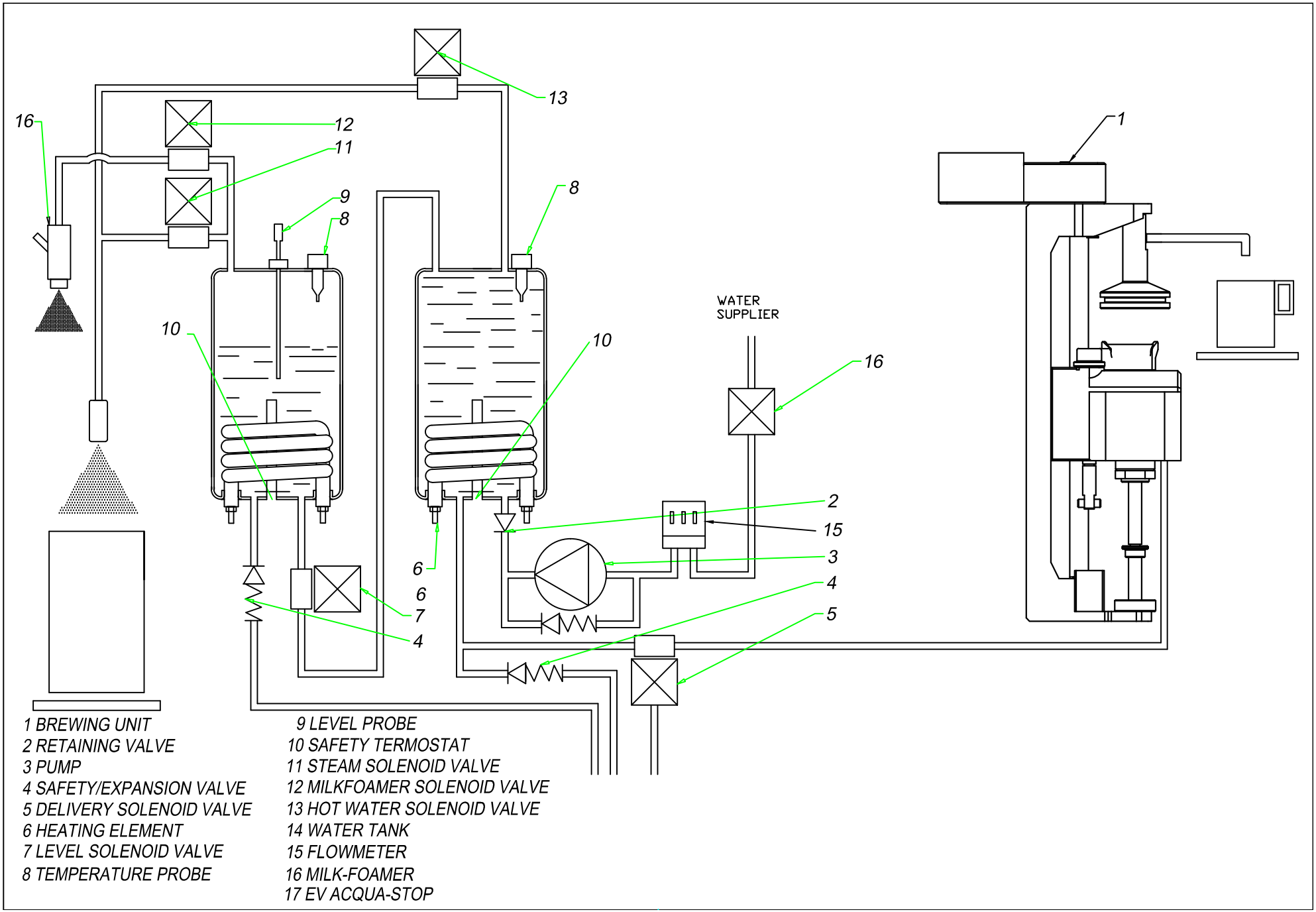

1 BREWING UNIT
2 RETAINING VALVE
3 PUMP
4 SAFETY/EXPANSION VALVE
5 DELIVERY SOLENOID VALVE
6 HEATING ELEMENT
7 LEVEL SOLENOID VALVE
8 TEMPERATURE PROBE
9 LEVEL PROBE
10 SAFETY TERMOSTAT
11 STEAM SOLENOID VALVE
12 MILKFOAMER SOLENOID VALVE
13 HOT WATER SOLENOID VALVE
14 WATER TANK
15 FLOWMETER
16 MILK-FOAMER
17 EV ACQUA-STOP