ELECTRICAL SCHEME coffee machine mod. MUSICA

120V-60Hz
230V-50Hz

N GROUND
N NEUTRAL
P PHASE

A.S. AUTO-LEVEL SENSOR
M.S. MAIN SWITCH
L.S. LIGHT SWITCH
E.U. ELECTRONIC UNIT
F.M. FLOW METER
T.L. TANK LEVEL SENSOR
PU. PUMP

H.W. HOT WATER ELECTROVALVE
DE. COFFEE DELIVERY ELECTROVALVE
LE. LEVEL ELECROVALVE
PR. PRESSURE SWITCH
T.F. THERMAL FUSE
EL. ELEMENT

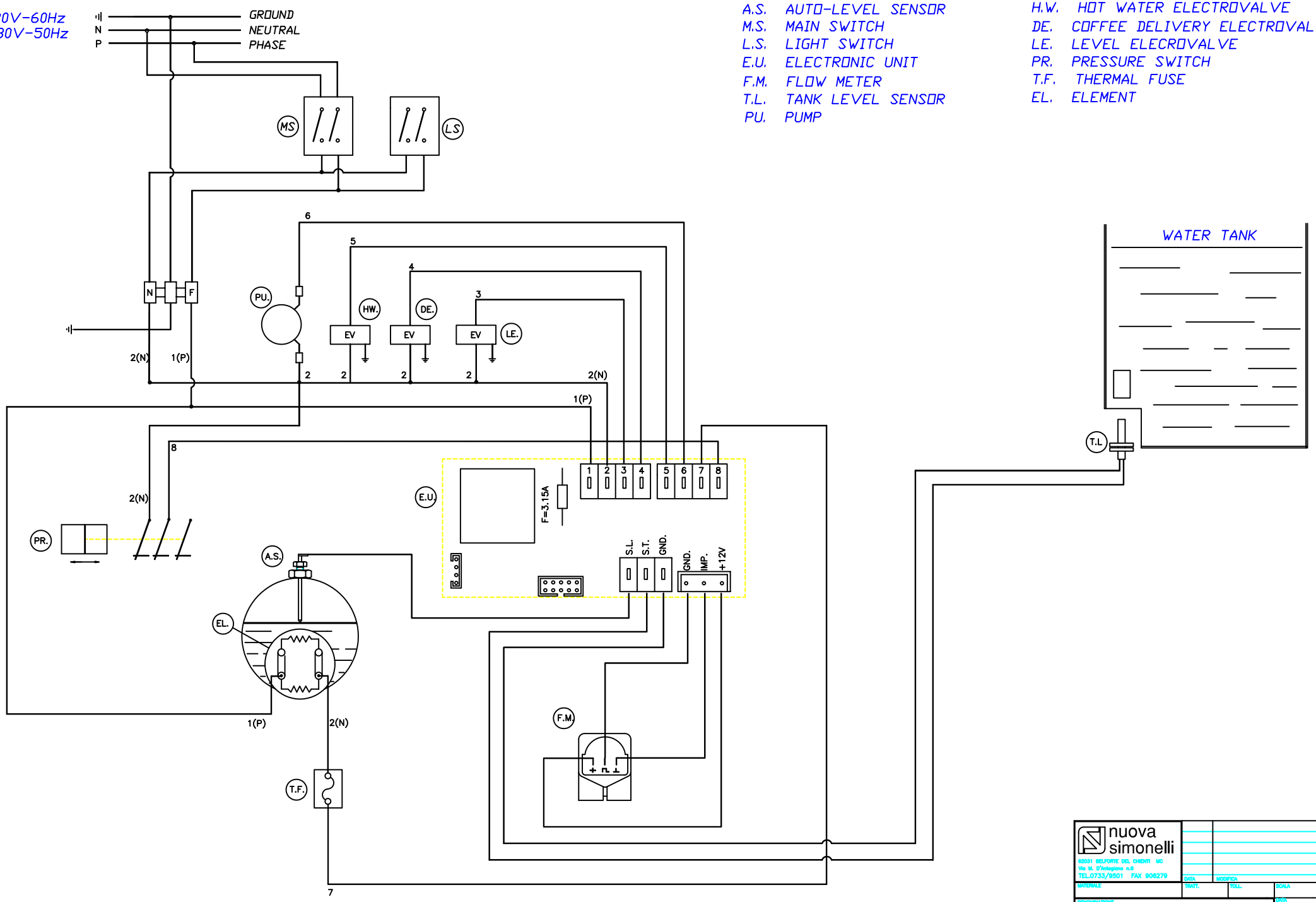

nuova simonelli
62031 BELFORTE DEL CHIENTI MC
Via M. D'Antoglione n.6
TEL.0733/9501 FAX 906279

DATA	MODIFICA			
MATERIALE	TRATT.	TOLL.	SCALA	FOGLIO
				A3
DENOMINAZIONE			DATA	DISEGN.
SCHEMA ELETTRICO / ELECTRICAL SCHEME			05-11-09	E.Z.
MUSICA				