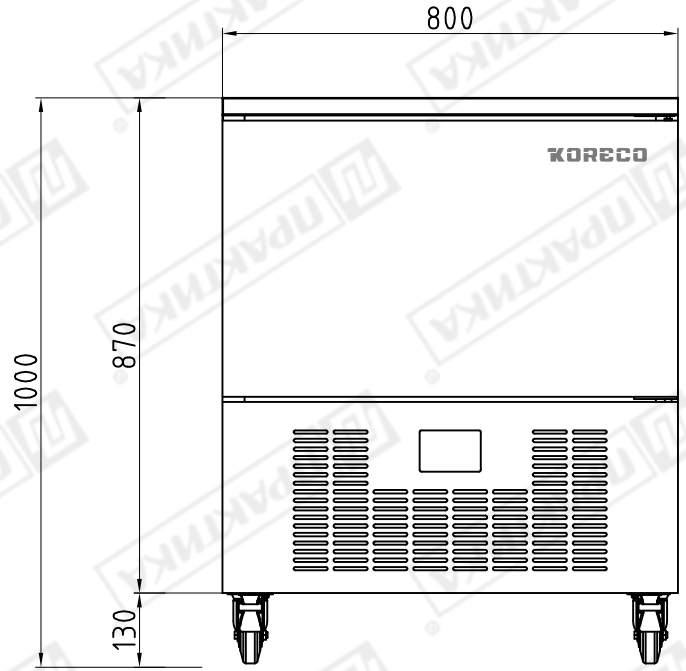

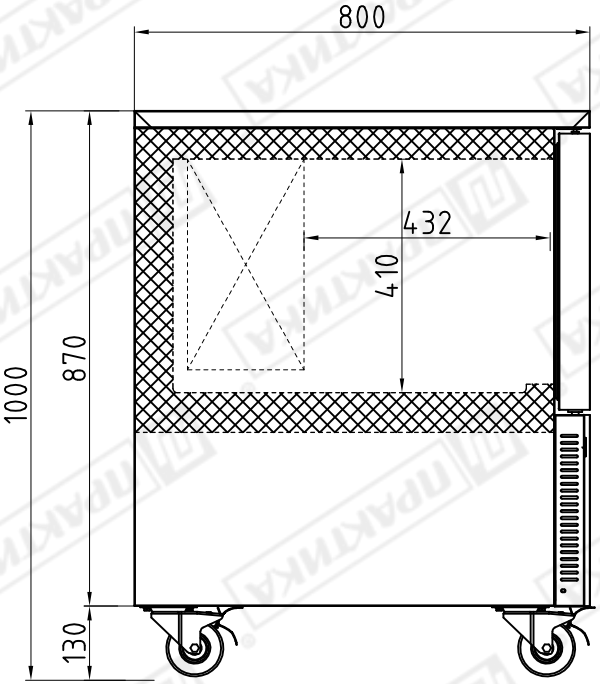

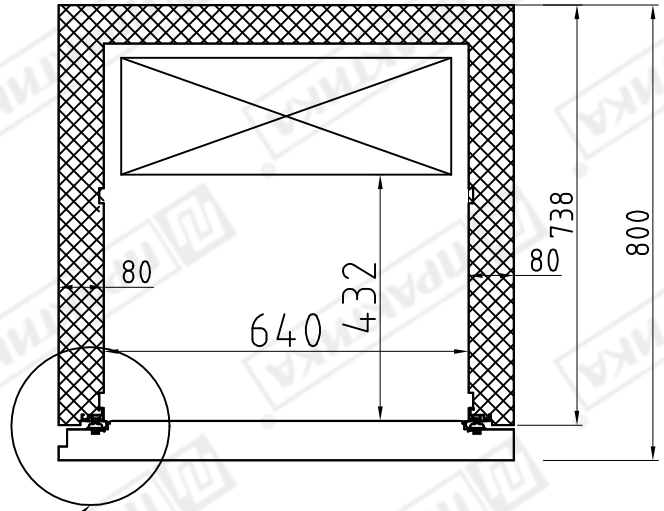

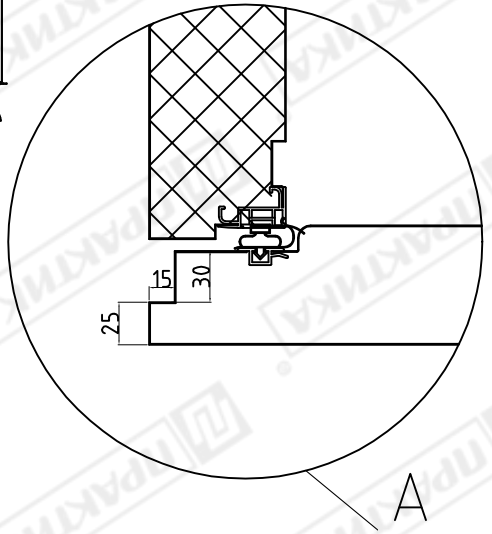

A

GN BCF 5 800x800x1000