

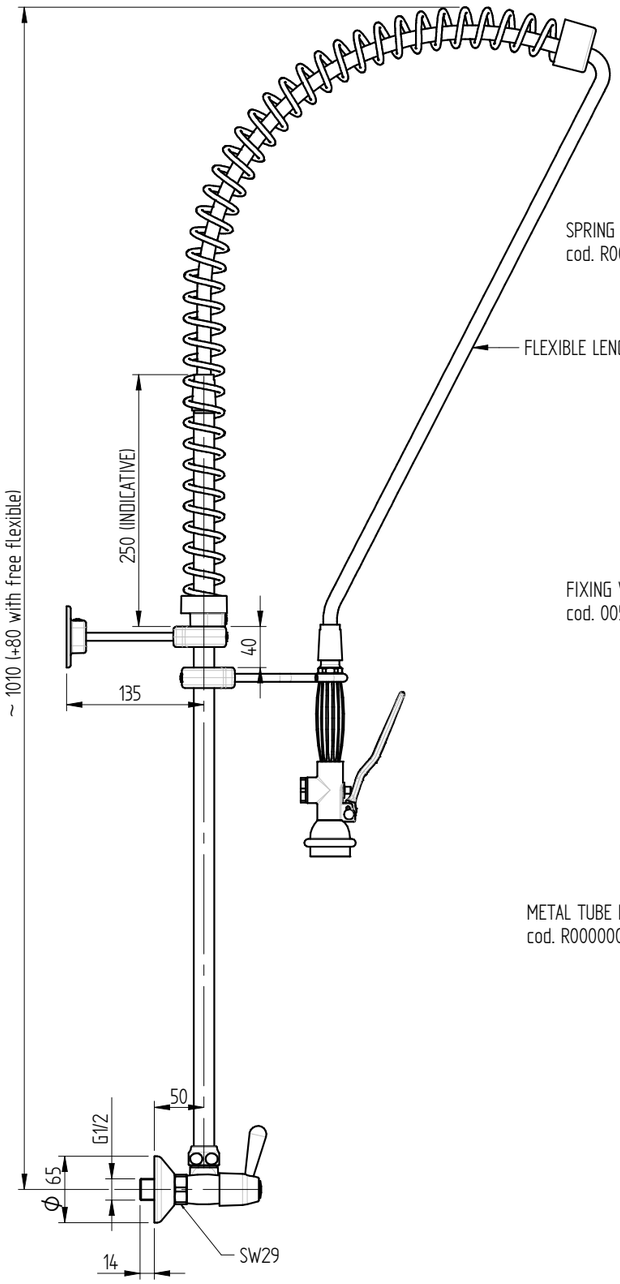

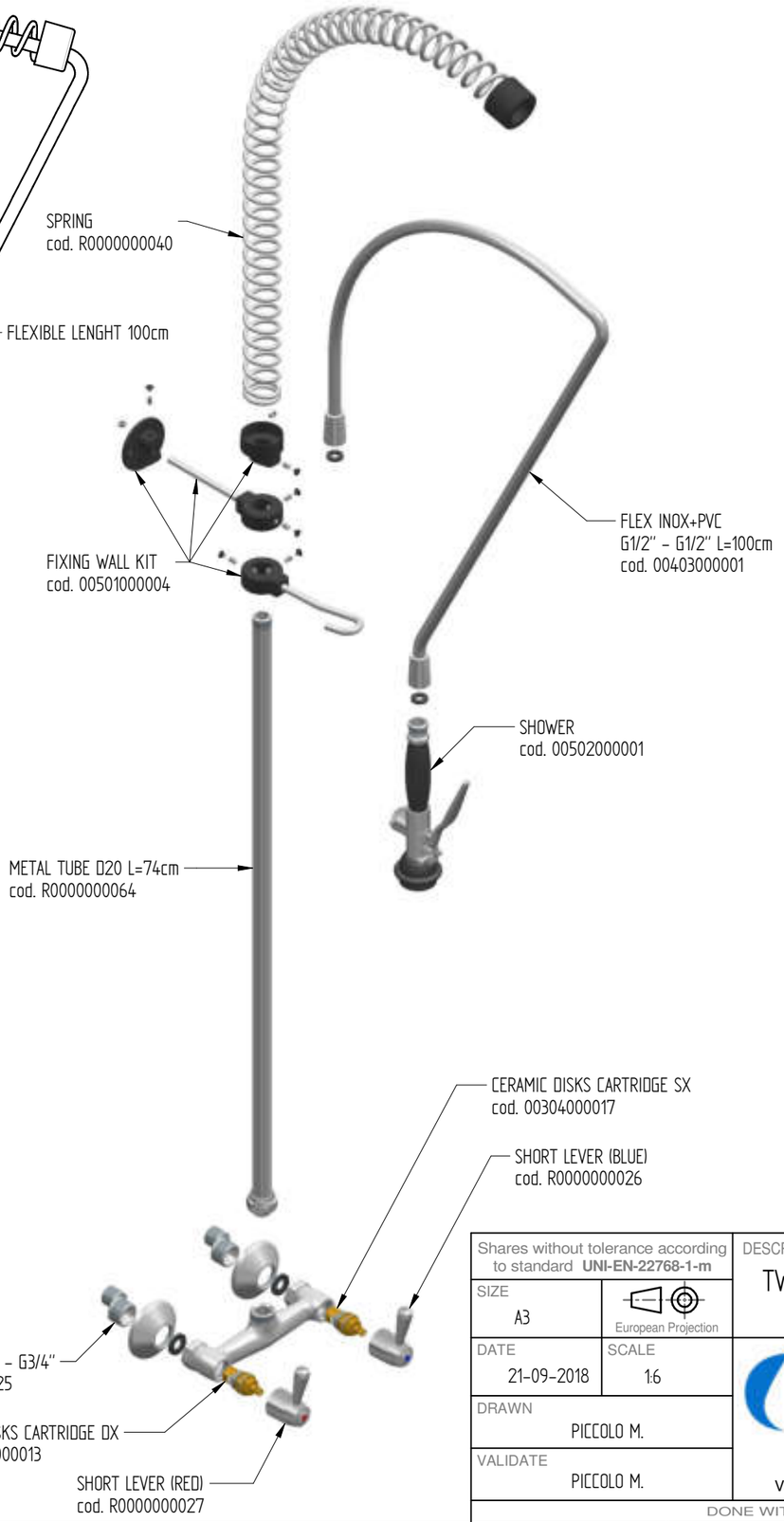



Shares without tolerance according to standard **UNI-EN-22768-1-m**

SIZE	A3
	European Projection
DATE	21-09-2018
SCALE	1:6
DRAWN	PICCOLO M.
VALIDATE	PICCOLO M.

DESCRIPTION

TWO HOLES WALL TAP WITH SHORT LEVER HANDLES, KIT SHOWER

CODE R0102010215

WEIGHT 3,62 Kg

MONOLITH
DESIGN AND TECHNOLOGICAL RESEARCH FOR WATER
VIA DELL'ARTIGIANO 8/F-8-G , 31050 MONASTIER di TREVISO (TV) tel: 0422 842157 - fax: 0422 708978

DONE WITH DESIGN CAD - PROHIBITED THE CHANGES MANUAL

Rev. 00