Electrolux

Turbo Liquidisers
Turbo Liquidiser for Soups - 2 Speed

ITEM # _____

MODEL # _____

NAME # _____

SIS # _____

AIA # _____



Turbo Liquidisers

Turbo Liquidiser for Soups - 2 Speed

603292 (TBX130F2V)	Turbo liquidiser, removable mixer tube for soups, 2 speed - 400/3/50
603294 (TBX130F2V2)	Turbo liquidiser, removable mixer tube for soups, 2 speed - 230/3/50

Short Form Specification

Item No. _____

Unit to be Electrolux TBX130 Turbo Liquidiser. Electrical characteristics to be ___400 V or ___230 V three-phase operation with double speed of 800/1.600 rpm. Designed to withstand intensive use, the turbo liquidisers are used to mix, liquidise, reduce and emulsify vegetable and fish soups, liquid pastries and sauces directly in cooking or liquid containers.

Main Features

- Constructed entirely in stainless steel to offer maximum durability.
- Liquidiser is mounted on a mobile stainless steel trolley and is height adjustable on installation.
- Safety device allows the machine to start only when it is in a working position.
- Turbine accelerates the flow of the liquid over the impeller providing a greater throughput and finer grinding.
- Double speed of 800/1.600 rpm.
- Mixer tube is easily removable without tools and can be dismantled in separate parts: tube, shaft, bearing and rotor.
- IP65 touch button control panel.
- Equipped with protective ring to cover grinding head.
- Suggested for deep and low pans containing between 150 to 500 liters of liquid.

Included Accessories

• 1 of Stainless steel tube for soups for turbo liquidiser	PNC 653484

Optional Accessories

• Stainless steel tube for soups for turbo liquidiser	PNC 653484 ❑
• Stainless steel tube for purees for turbo liquidiser	PNC 653485 ❑
• Puree kit for turbo liquidisers	PNC 653502 ❑
• Fish soup grid for turbo liquidisers	PNC 653507 ❑
• Braising pan kit for turbo liquidisers	PNC 653521 ❑

APPROVAL: _____

Electrolux
Turbo Liquidisers
Turbo Liquidiser for Soups - 2 Speed

Electrolux

Turbo Liquidisers
Turbo Liquidiser for Soups - 2 Speed

Front

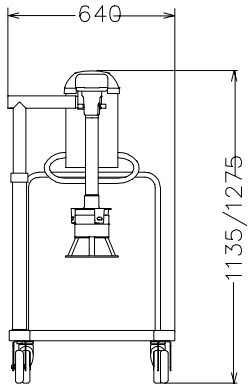

Top

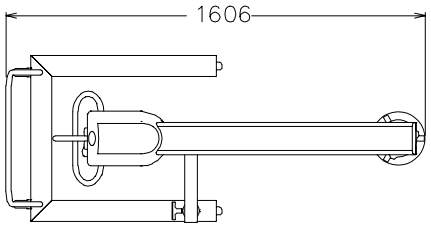

EI = Electrical connection

Side

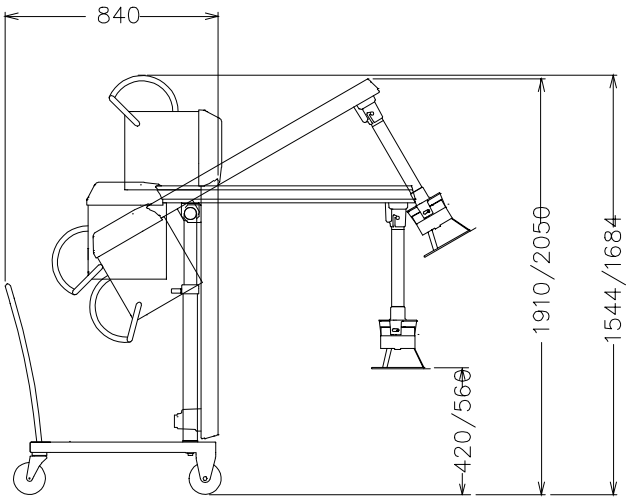

Electric

Supply voltage:	
603292(TBX130-04)	400 V/3 ph/50 Hz
603294(TBX130-16)	230 V/3 ph/50 Hz
Connected load:	2.2 kW
Total Watts:	2.2 kW

Key Information

External dimensions, Height	1278 mm
External dimensions, Width	689 mm
External dimensions, Depth	1600 mm
External dimensions, Weight	90 kg
Shipping weight:	105 kg

The company reserves the right to make modifications to the products without prior notice. All information correct at time of printing.

2010.04.06