

Welcome



The new

Basket transport machine

K 160

The new K 160



K 160 – the new models

K 160 Pi – 105 baskets/hour

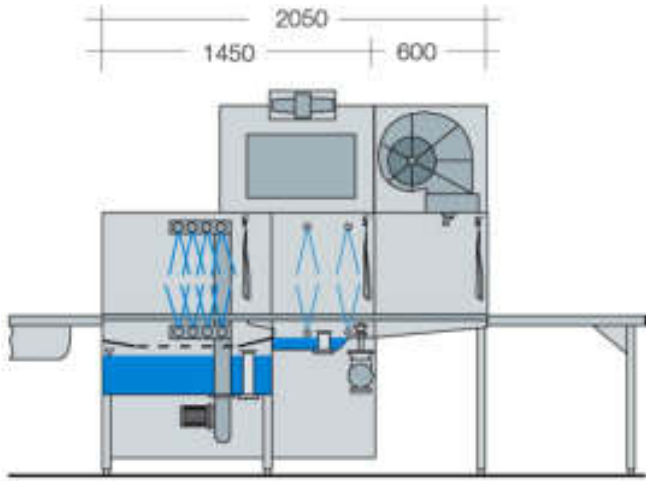

- ✓ A range to fit all requirements:
  - optional pump final rinse
  - optional pre-wash
  - optional heat recovery
  - optional drying

K 160 – 80 baskets/hour

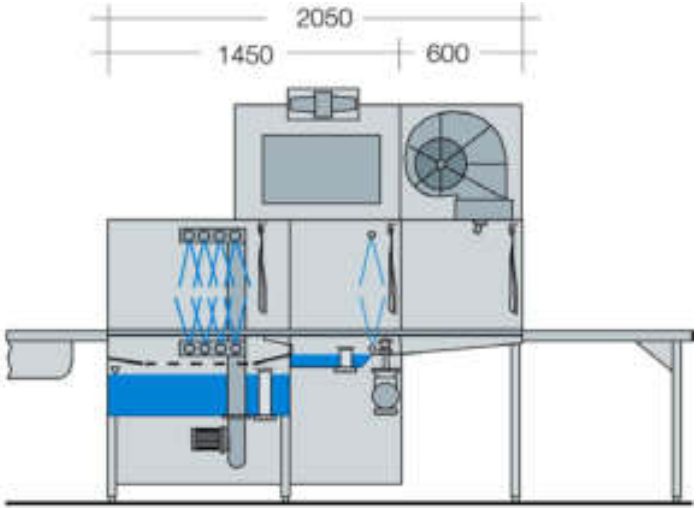

K 160 VPi – 130 baskets/hour

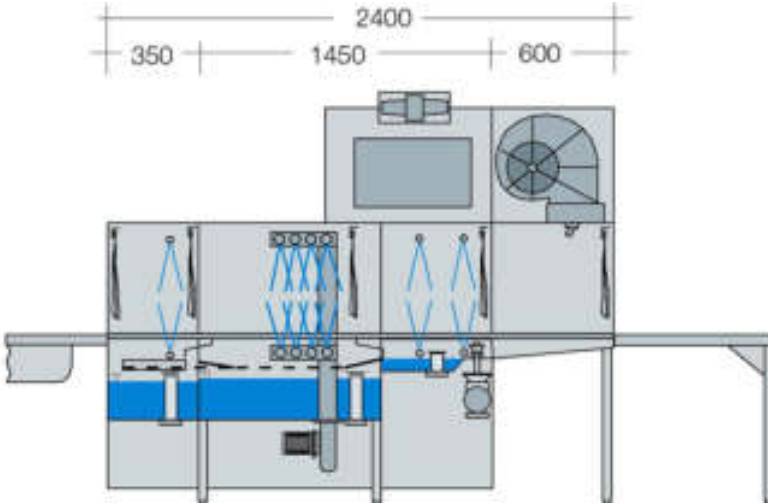

K 160 – the new models

- ✓ Automatic basket transport – high throughput: up to 130 baskets/h
- ✓ Powerful cleaning (8 Wash arms!) – excellent wash results
- ✓ Sparkling final rinse
  at low final rinse water quantity
- ✓ Powerful drying (optional)
  – Dishes immediately re-useable
- ✓ Extremely cost efficiant
  - Heat recovery up to 12 kW (Option)
  - Double wall insulation as standard (Front wall and drying)
- ✓ Improved working organisation – all feeding and discharge table configurations are possible



K 160 – the new models

Areas of application – Differentiation to the K-Tronic series

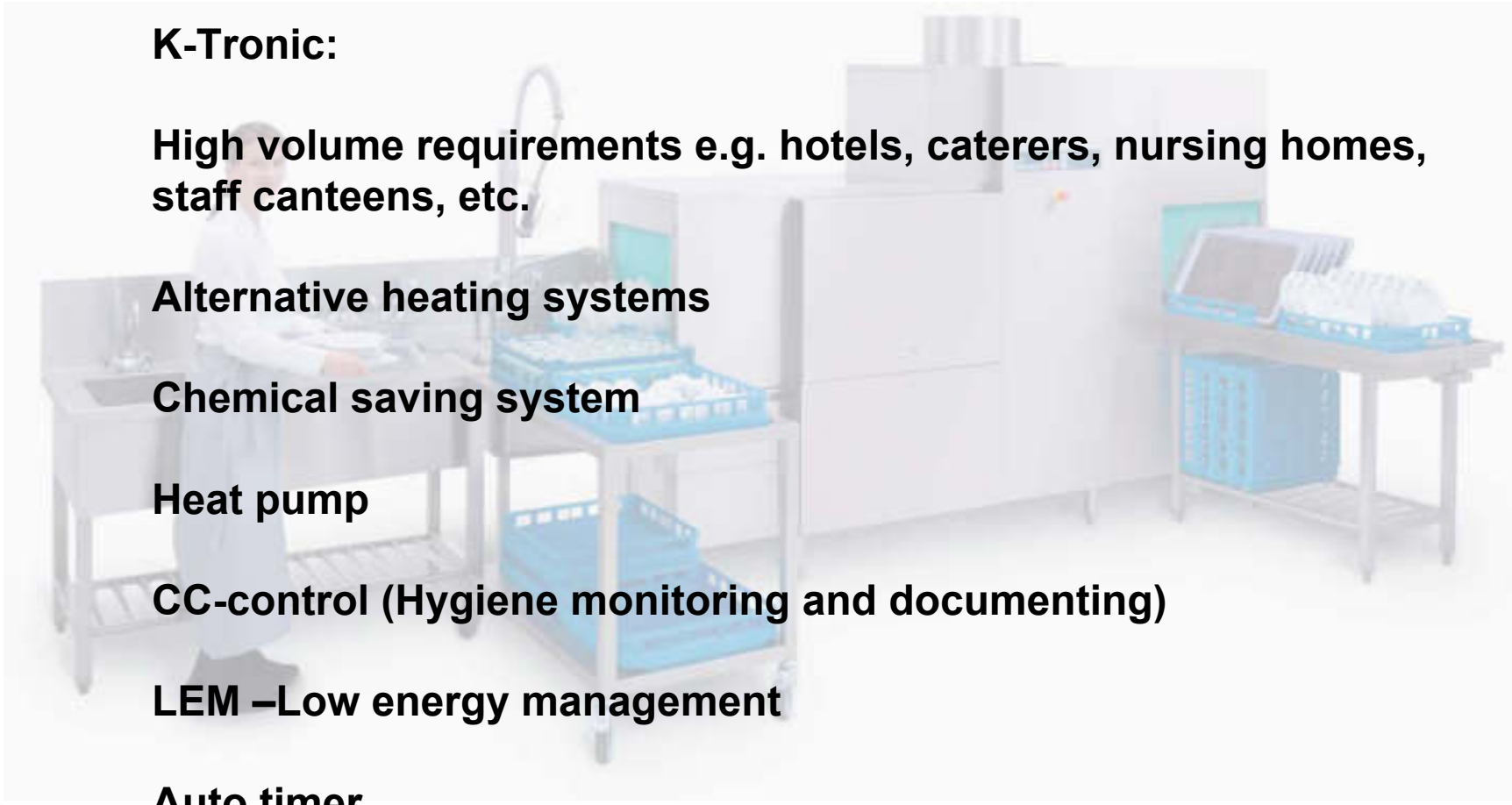

K-Tronic:

- **High volume requirements e.g. hotels, caterers, nursing homes, staff canteens, etc.**
- **Alternative heating systems**
- **Chemical saving system**
- **Heat pump**
- **CC-control (Hygiene monitoring and documenting)**
- **LEM –Low energy management**
- **Auto timer**

K 160 – the new models

Areas of application – Differentiation to the K-Tronic series



K 160 Series

- Increased performance compared to hood type machines
- automatic basket transport
- medium volume requirements
- CE control
- Emergency stop

Options:

- Fresh water saving device incl. autotimer
- Main switch
- Table end switch

K 160 – the new models

Standard equipment:

- CE control with temperature indication
- Connection to three pase current 400 V/50Hz
- Tank filling via final rinse system (Cold water connection; WKW)
- Rinse aid dosing chamber for optimum dosage
- Double-insulated front wall, only main wash tank (door and substructure)
- One transport speed
- Integrated pressure reducing valve and dirt trap
- Emergency stop

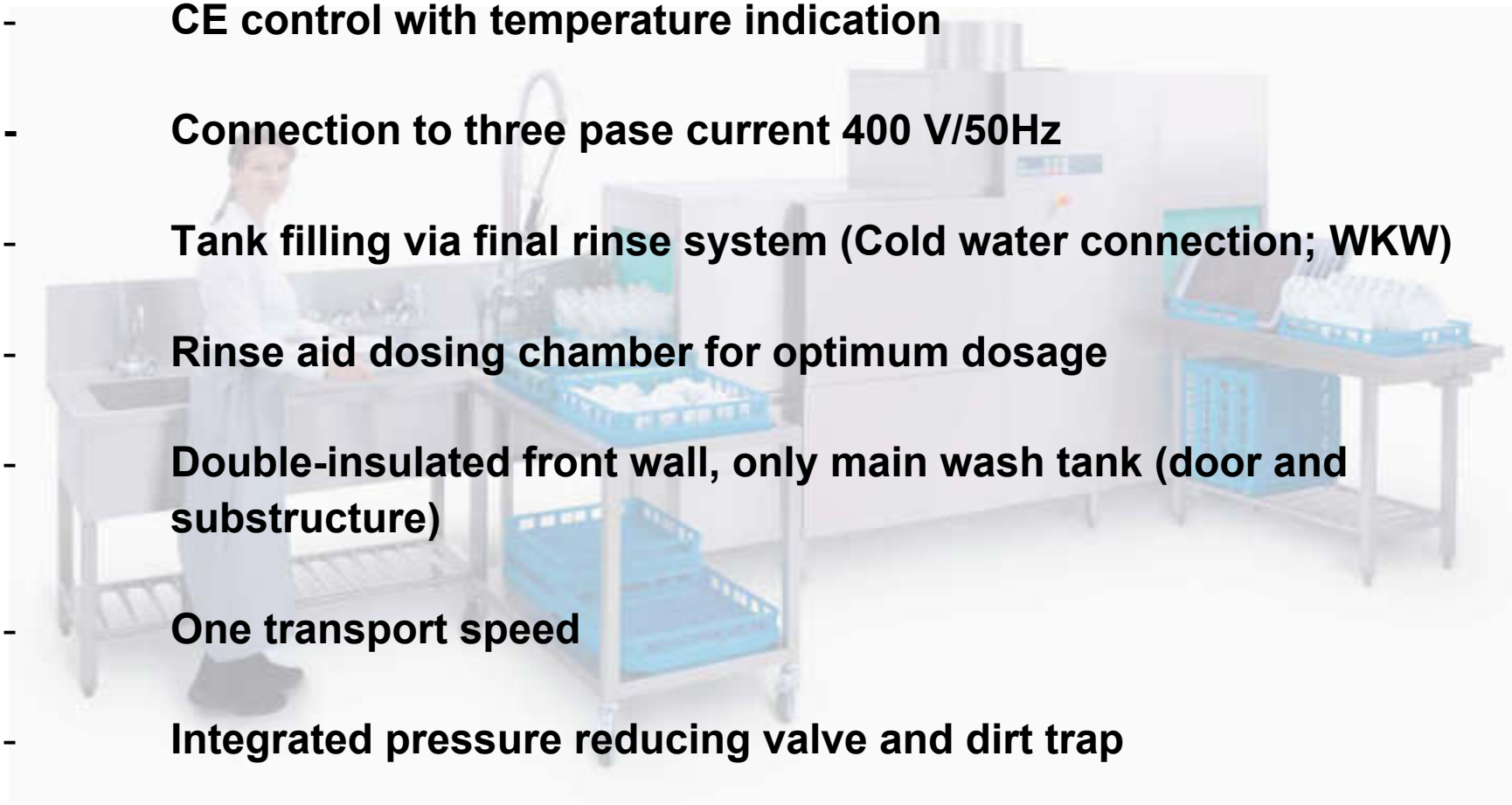

K 160 – the new models

Standard equipment:

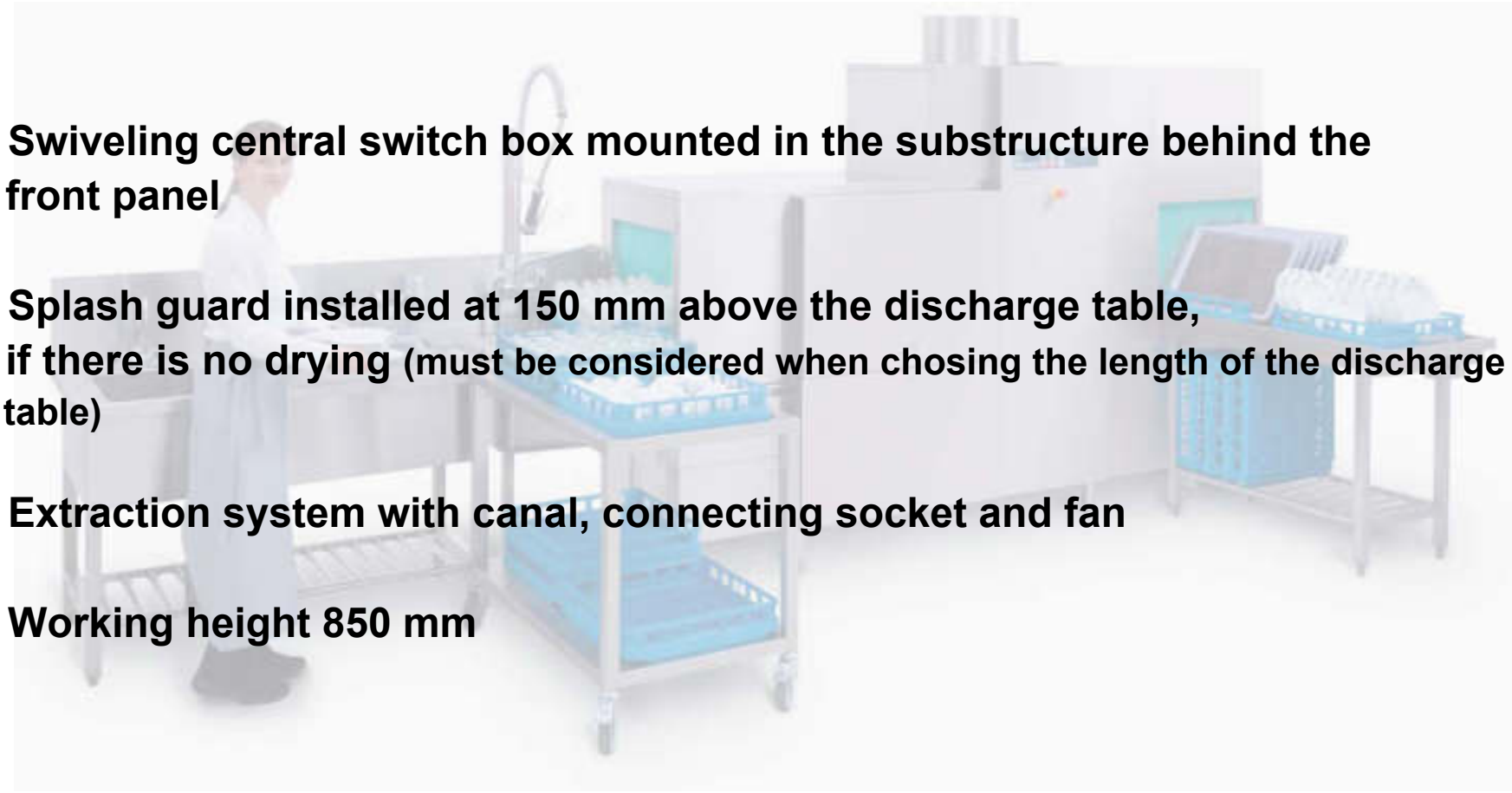

- Swiveling central switch box mounted in the substructure behind the front panel

- Splash guard installed at 150 mm above the discharge table, if there is no drying (must be considered when chosing the length of the discharge table)

- Extraction system with canal, connecting socket and fan

- Working height 850 mm

K 160 – the new models

Options/Additional charge:

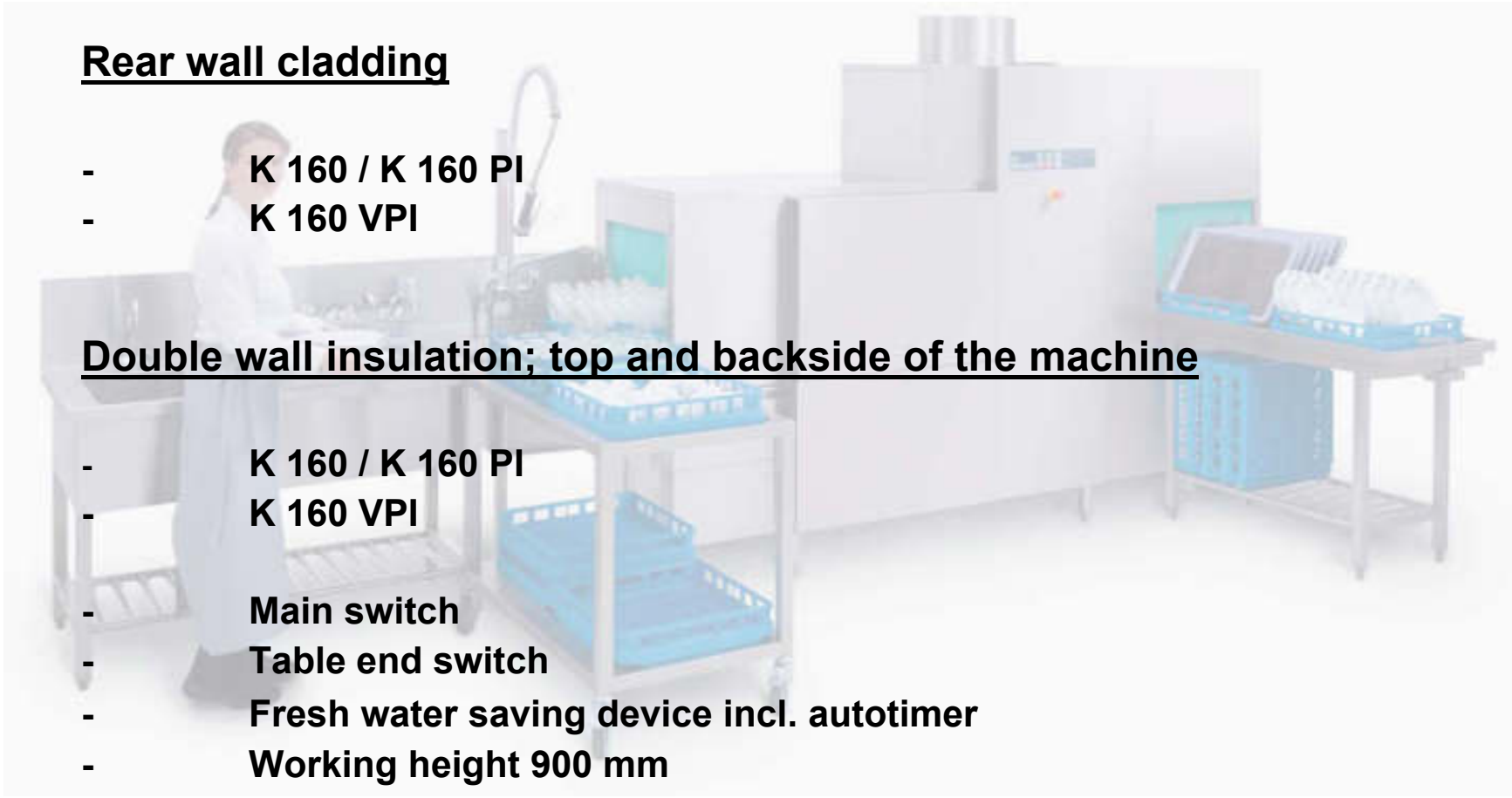

Rear wall cladding

- K 160 / K 160 PI
- K 160 VPI

Double wall insulation; top and backside of the machine

- K 160 / K 160 PI
- K 160 VPI

- Main switch
- Table end switch
- Fresh water saving device incl. autotimer
- Working height 900 mm

K 160 – the new models

Options/Additional charge:



According to the K-Tronic price list

- Waste air heat recovery system 60 m² cooling surface
- Drying TR 1 in a straight execution, (Front and back side insulated)
- Drying TR 3 above a 90°- or 180°-curve, (Front and back side insulated)
- Table programme
- Basket assortment

K 160 – the new models

- ✓ **K 160 VPi – with pump final rinse and prewash:**
  First class technology – cross section
  (shown with optional heat recovery and drying)

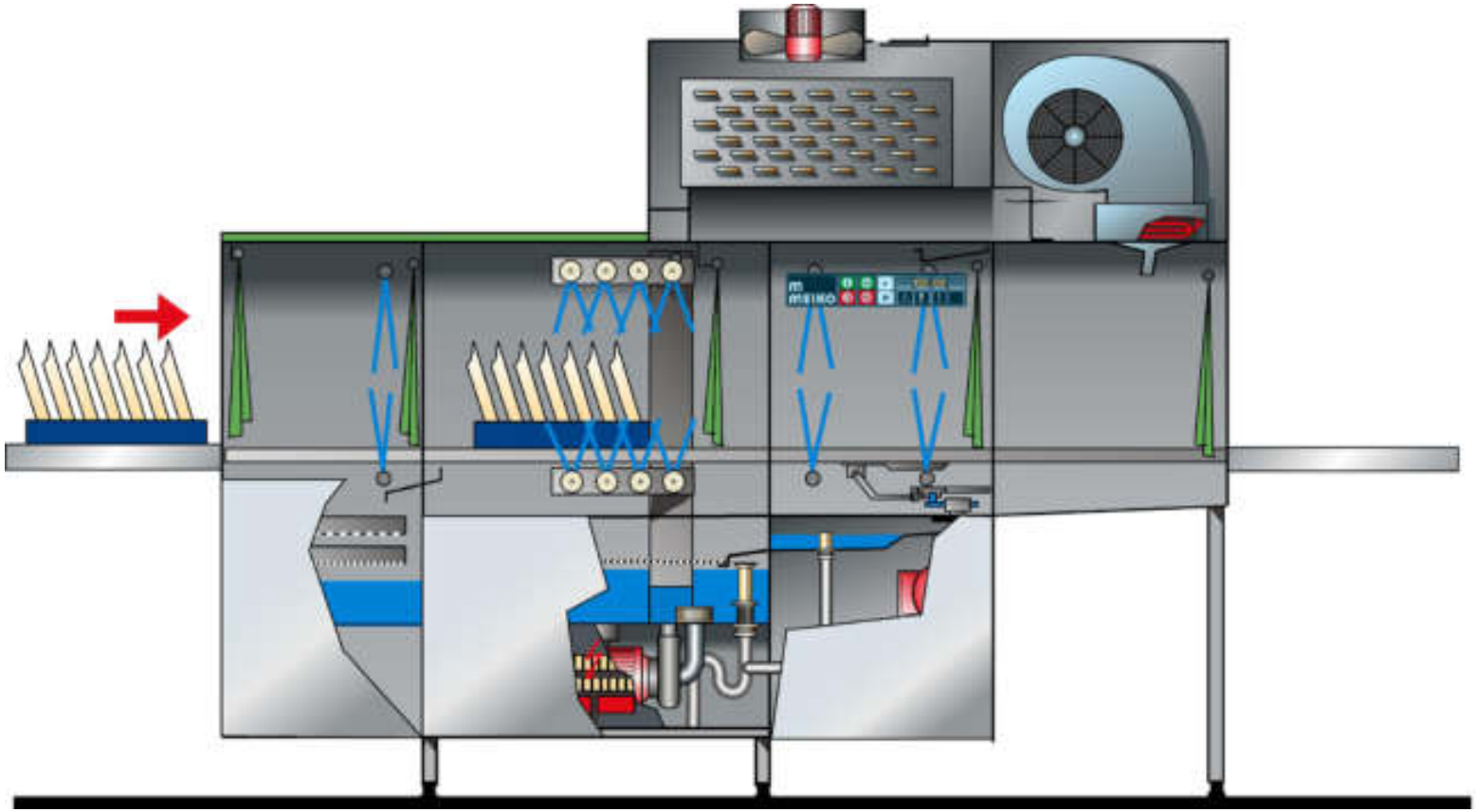

K 160 – the new models

- ✓ **Automatic basket transport – high throughput: up to 130 baskets/h**



K 160 – the new models

- ✓ **Powerful pre-wash system with double filtration**

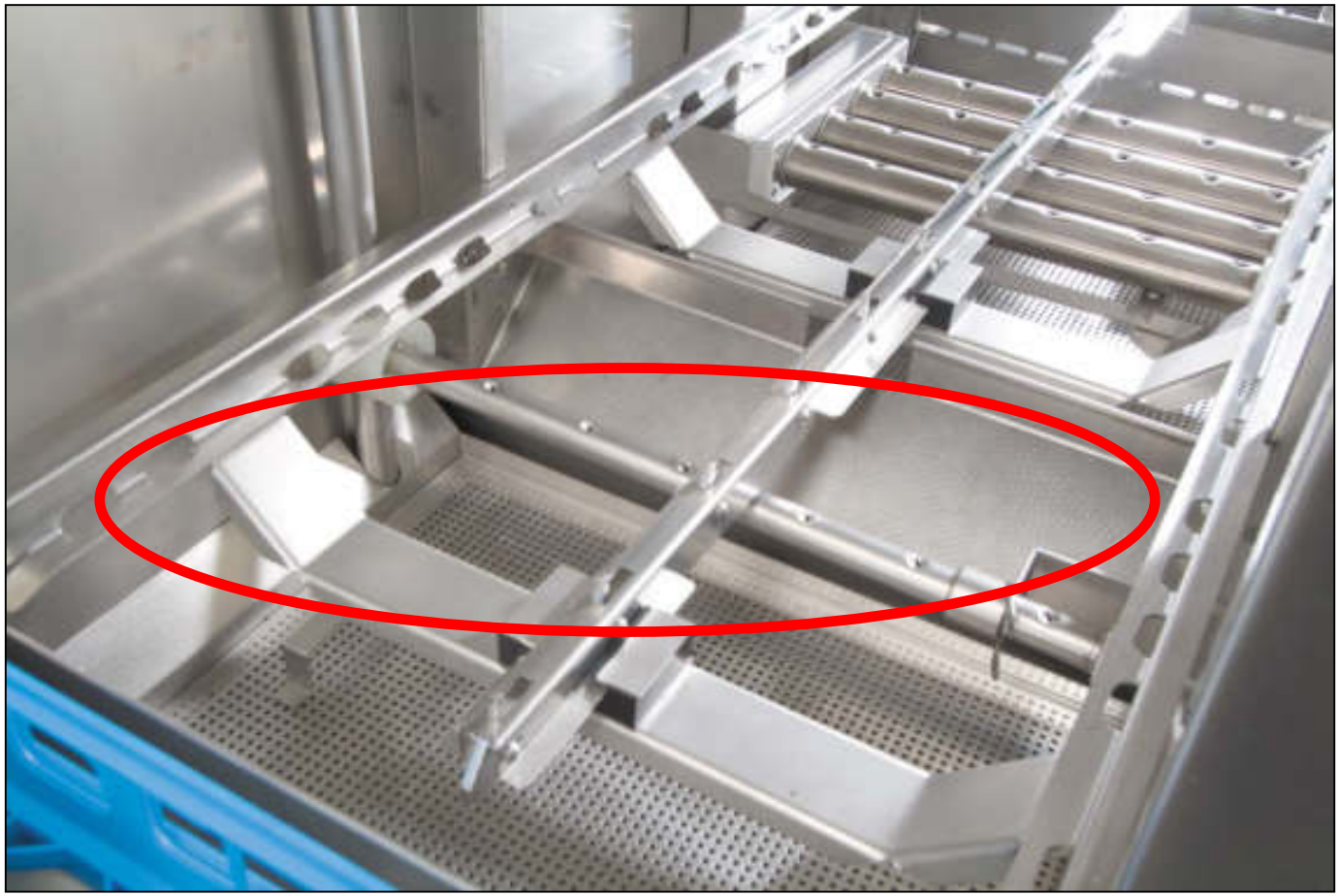

K 160 – the new models

- ✓ Lightweight sliding doors



K 160 – the new models

- ✓ **Powerful cleaning (8 wash arms!) – excellent wash results**



K 160 – the new models

- ✓ **Manifold wash systems for easy cleaning and optimized spray pattern**



K 160 – the new models

- ✓ Tank surface filters made of stainless steel



K 160 – the new models

- ✓ Sparkling final rinse - low final rinse water quantity



K 160 – the new models

- ✓ **Powerful drying (option) – dishes can be immediately re-used**



K 160 – the new models

- ✓ **Great savings in operating costs**
  - **Heat recovery up to 12 kW (option)**
  - **Double-walled insulation as standard (machine front and drying zone)**



K 160 – the new models









- ✓ **Switch box**

  all components are clearly arranged and

  well-protected

K 160 – the new models

- ✓ **In combination with 90° or 180° curves, automatic corner feeds, roller and sliding tables, highly efficient application configurations are possible, offering solutions to every individual problem.**

