Electrolux Dishwashing

Rack Type WTCS250 - electric

The Electrolux Dishwashing range is produced for customers with the highest conceivable demands for good efficiency, economy and ergonomics for dishwashing operation. The product range comprises glasswashers, undercounter dishwashers, hood type dishwashers, rack type dishwashers, flight type dishwashers and pot and pan washers. The rack type dishwasher range is designed to be easily connected with the equipment included in the Electrolux Handling System range, to create a functional and ergonomic dishwashing area. The rack type dishwasher WTCS250 has a capacity up to 250 racks per hour with 2 speeds, variable on installation. The range consists of 4 electrically heated models (steam on request), available with or without Energy Saving Device (ESD).



EASY TO INSTALL
- Solid 3mm square stainless steel sub-frame with bolt-together construction that can be delivered assembled or in modules to be connected on site.
- All rear positioned water tubes in stainless steel.
- Only one cable for electrical connection.
- Service from the front and from the side.
- Pre-arrangements for automatic detergent dispenser, energy management device and HACCP implementation (both basic as well as integrated system).

FUNCTIONAL ZONES
- Pre-wash is separate from wash zone with less than 35°C water without detergent for maximum dirt removal and incorporates automatic partial drain.
- In the wash zone all the soil is removed by the combination of the mechanical washing action by means of a powerful 450 litres / minute self draining wash pump, the thermal action of the heating elements that guarantee a constant water temperature of between 55° and 65°C and appropriate detergents. Wash tank is pressed.
- Rinse zone: clean water is used to eliminate any trace of detergent from the wash-ware.
- As optional extra the WTCS250 can be equipped with a drying zone for fast and efficient drying.

EASY TO CLEAN AND MAINTAIN
- Tanks are pressed with completely rounded corners and sloping base to facilitate cleaning.
- Smooth surfaces.
- 304 AISI stainless steel front and side panels, strainers and wash and rinse arms.
- Wash arms and double tank filter (flat and deep box) easy to remove.
- Height adjustable stainless steel feet.
- All models finished in top quality materials with double skinned construction to aid durability and reduce noise.

Electrolux

Electrolux Dishwashing
Rack Type WTCS250 - electric

• Self-draining wash pumps provide maximum hygiene.
• Easy access to the energy saving condenser unit.
• Large balanced inspection doors for easy access to wash area.
• Self-cleaning cycle in pre-wash, wash & rinse zones.

EASY TO USE
• Automatic start/stop function.
• Simple electric control panel.
• Counter balanced door with safety switch and easy to grip handle.

• Built-in rinse water heater to increase the temperature of the final rinse water.
• Electronic control panel with autodiagnostic check control.

EASY ON THE ENVIRONMENT
• 35mm thickness foam injection insulated doors to reduce noise and reduce heat dispersion.
• Available with version equipped with Energy Saving Device (ESD) to pre-heat the incoming cold water and to save up to 12kW of energy. ESD incorporates a condenser unit to decrease temperature and humidity of the outlet hot steam.

• Separate pre-wash for lower detergent and water consumption.
• 98% recyclable by weight.
• CFC free packaging.
• Low noise level.
• Developed and produced in ISO 9001 and ISO 14001 certified factory.

	WTCS250ERA 534310	**WTCS250ELA 534311**	**WTCS250ERB 534312**	**WTCS250ELB 534313**
TECHNICAL DATA				
Model	Electronic - A	Electronic - A	Electronic - B	Electronic - B
Power supply	Electric	Electric	Electric	Electric
Feeding direction	from RH to LH	from LH to RH	from RH to LH	from LH to RH
Energy Saving Device incl. cond. unit	●	●		
Water supply				
hot water inlet °C	50	50	50	50
cold water inlet °C	15	15	15	15
N° of speeds	2	2	2	2
Capacity dishes/h 1st/2nd speed	4500, 3240	4500, 3240	4500, 3240	4500, 3240
Capacity baskets/h 1st/2nd speed	250, 180	250, 180	250, 180	250, 180
Air emission - m³/h	180	180		
Insulation	●	●	●	●
External dimensions - mm				
width	2243	2243	2243	2243
depth	884	884	884	884
height/with open door	1771, 2119	1771, 2119	1771, 2119	1771, 2119
Pre-wash				
temperature - °C	<35	<35	<35	<35
tank capacity - lt.	100	100	100	100
pump power - kW	1.0	1.0	1.0	1.0
1st wash				
temperature - °C	55-65	55-65	55-65	55-65
tank capacity - lt.	100	100	100	100
pump power - kW	1.5	1.5	1.5	1.5
Rinsing				
temperature - °C	80-90	80-90	80-90	80-90
boiler capacity - lt.	12	12	12	12
boiler power - kW	16.5	16.5	16.5	16.5
Total installed power - kW	31	31	30.9	30.9
Net weight - kg.	859	859	817	817
ACCESSORIES				
12 S/S PLUGS FOR WASH.ARMS-MODUL/COMP.RT	864239	864239	864239	864239
BASKET FOR 5 HALF INSULATED TRAYS-RED	867005	867005	867005	867005
DRAIN KIT FOR MODULAR+COMPACT RACK TYPE	864150	864150	864150	864150
EL. DRYING TUNNEL-COMPACT RT-L>R-600 MM		864519		864519
EL. DRYING TUNNEL-COMPACT RT-L>R-900 MM		864517		864517
EL. DRYING TUNNEL-COMPACT RT-R>L-600 MM	864518		864518	
EL. DRYING TUNNEL-COMPACT RT-R>L-900 MM	864516		864516	
EL. DRYING TUNNEL-CORNER-L>R-COMPACT RT		864521		864521
EL. DRYING TUNNEL-CORNER-R>L-COMPACT RT	864520		864520	
EL.HOT AIR BLOWER-LEFT-600MM-COMPACT RT		864507		864507
EL.HOT AIR BLOWER-RIGHT-600MM-COMPACT RT	864506		864506	
KIT 6 BASKETS FOR 1-TANK RACK TYPE DW	867050	867050	867050	867050
KIT 9 BASKETS FOR 1-TANK RACK TYPE DW	867051	867051	867051	867051
KIT AIR GAP FOR COMPACT RACK TYPE	864309	864309	864309	864309
KIT SANITIZ.(2 HEAT.EL)-SHORT CRT 250R/H	864167	864167	864167	864167
KIT SILASTIC CURTAINS FOR RACK TYPE DW	864245	864245	864245	864245
SPLASH HOOD-LEFT SIDE-COMPACT RACK TYPE	864248	864248	864248	864248
SPLASH HOOD-RIGHT SIDE-COMPACT RACK TYPE	864247	864247	864247	864247

IECD010
2010-05-28
Subject to change without notice

Electrolux Dishwashing
Rack Type WTCS250 - electric

534310

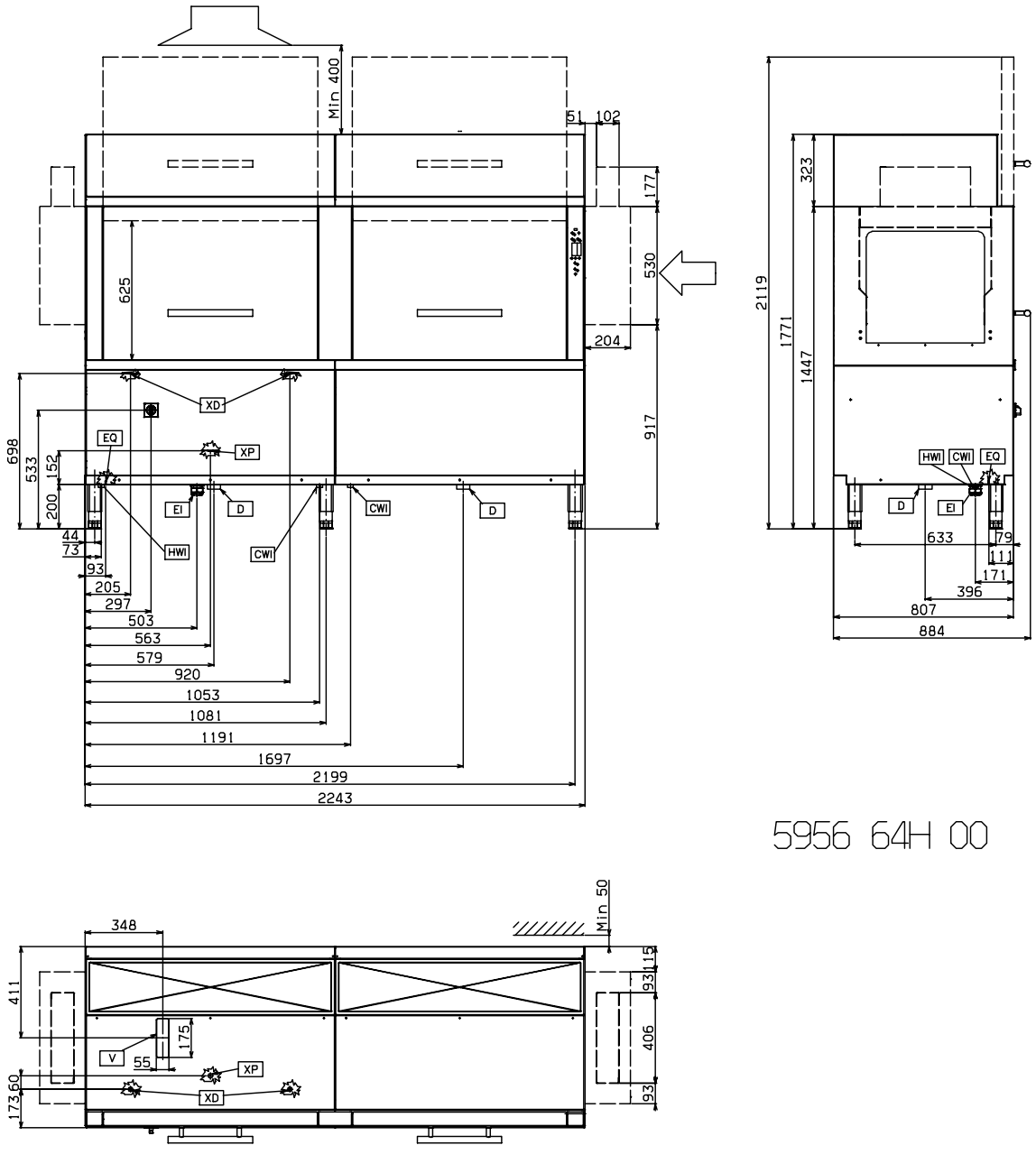

	WTCS250ERA 534310
LEGEND	
CWI - Cold water inlet	G 3/4"
D - Water drain	G 1 1/2"
EI - Electrical connection	400 V, 3N, 50
EQ - Equipotential screw	●
HWI - Hot water inlet	G 3/4"
V - Condensation outlet	●
XP - Connection for detergent dispenser	●
XP - Connection for detergent probe	●

IECD010

2010-05-28

Subject to change without notice

Electrolux Dishwashing
Rack Type WTCS250 - electric

534311

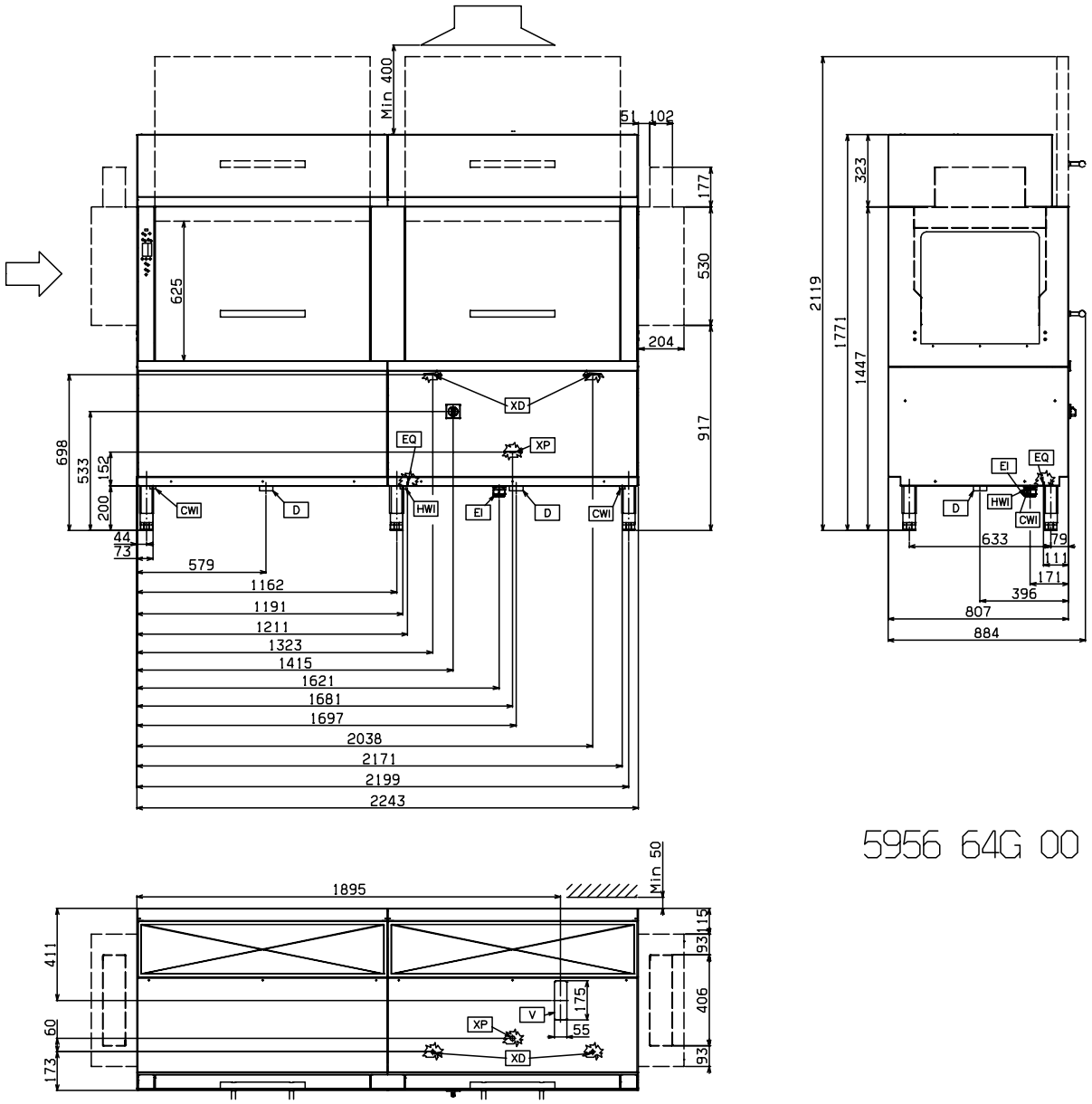

	WTCS250ELA 534311
LEGEND	
CWI - Cold water inlet	G 3/4"
D - Water drain	G 1 1/2"
EI - Electrical connection	400 V, 3N, 50
EQ - Equipotential screw	●
HWI - Hot water inlet	G 3/4"
V - Condensation outlet	●
XP - Connection for detergent dispenser	●
XP - Connection for detergent probe	●

IECD010

2010-05-28

Subject to change without notice

Electrolux Dishwashing
Rack Type WTCS250 - electric

534312

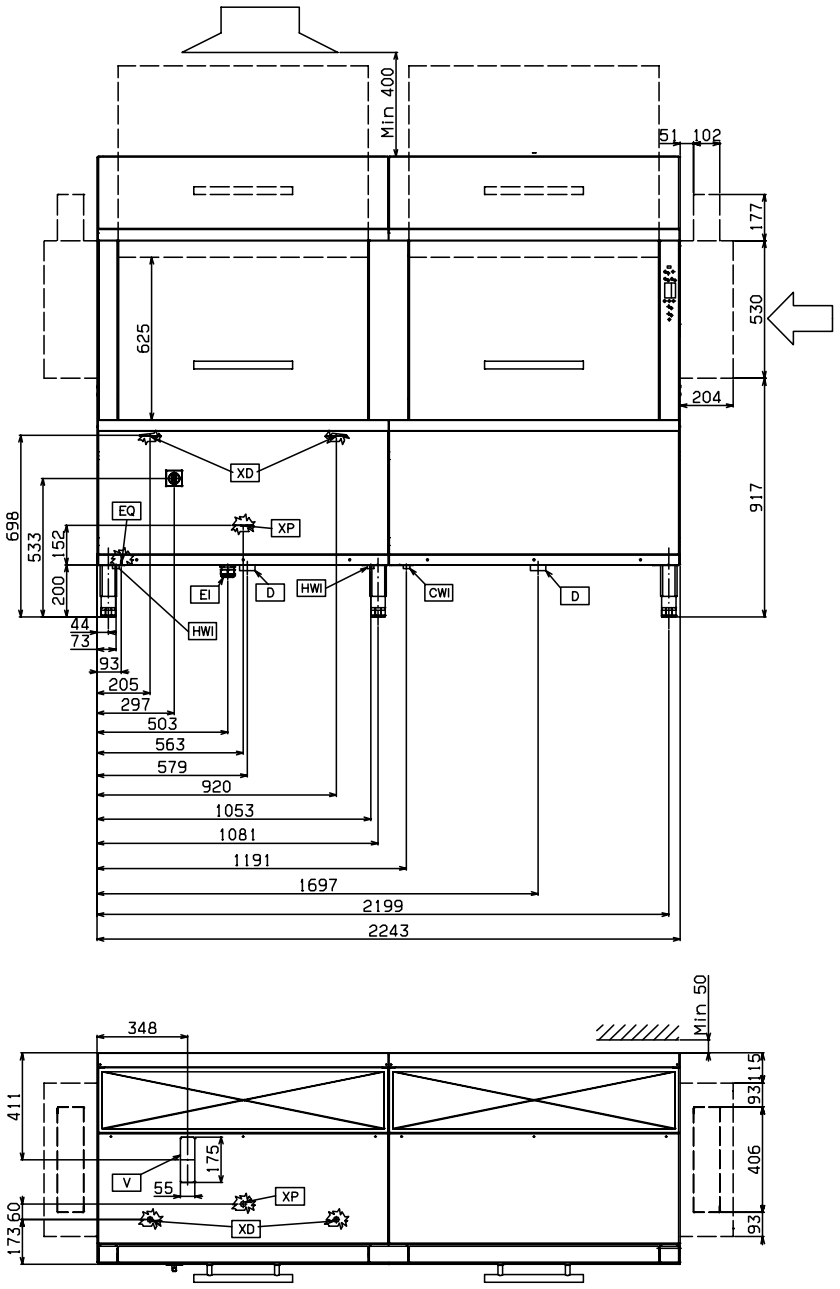

5956 650 00

IECD010

2010-05-28

LEGEND	WTCS250ERB 534312
CWI - Cold water inlet	G 3/4"
D - Water drain	G 1 1/2"
EI - Electrical connection	400 V, 3N, 50
EQ - Equipotential screw	●
HWI - Hot water inlet	G 3/4"
XP - Connection for detergent dispenser	●
XP - Connection for detergent probe	●

Subject to change without notice

Electrolux Dishwashing
Rack Type WTCS250 - electric

534313

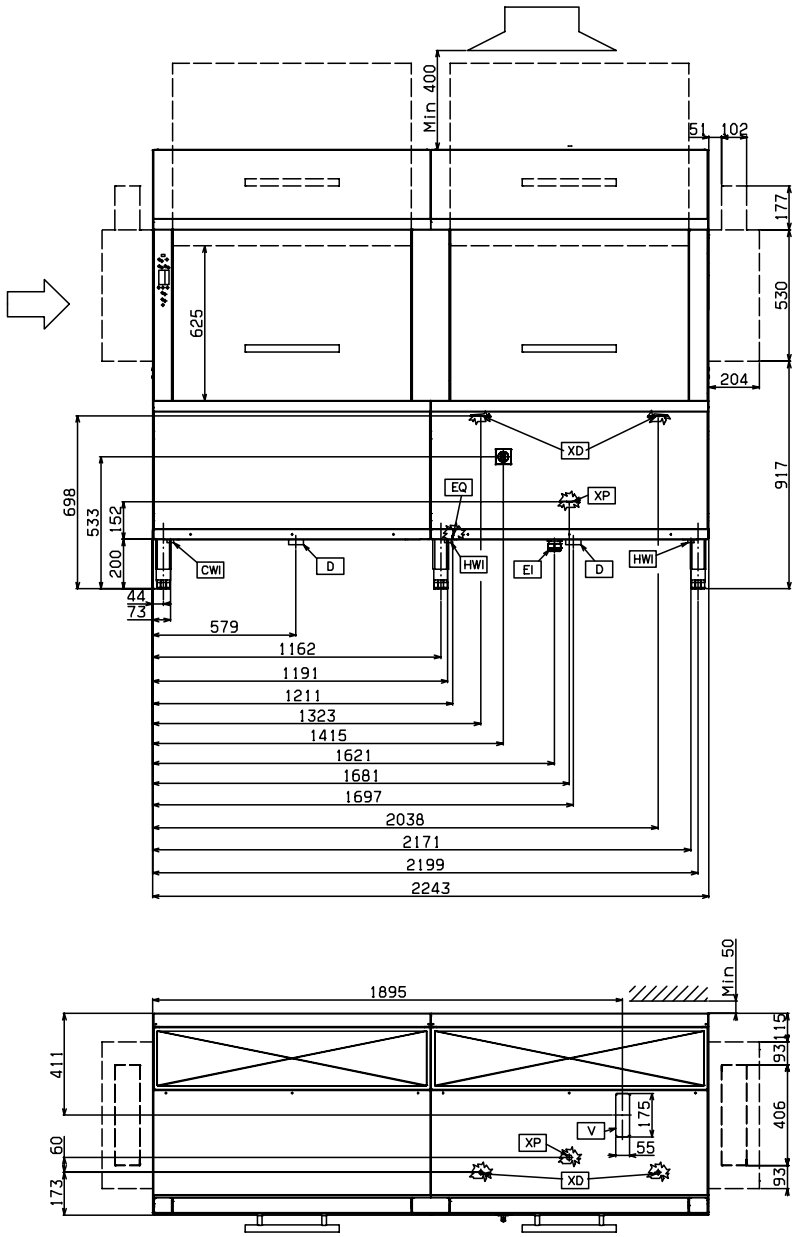

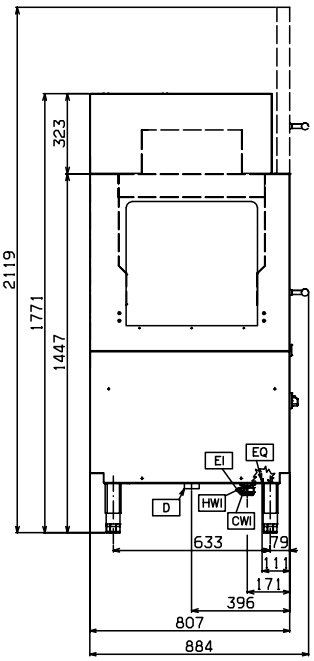

5956 651 00

LEGEND	WTCS250ELB 534313
CWI - Cold water inlet	G 3/4"
D - Water drain	G 1 1/2"
EI - Electrical connection	400 V, 3N, 50
EQ - Equipotential screw	●
HWI - Hot water inlet	G 3/4"
XP - Connection for detergent dispenser	●
XP - Connection for detergent probe	●

IECD010

2010-05-28

Subject to change without notice