Electrolux

Warewashing
Electric Rack Type Dishwasher with Energy Saving Device, 2 Speeds & Pressure Boiler - 180 r/hr

ITEM #

MODEL #

NAME #

SIS #

AIA #



Warewashing

Electric Rack Type Dishwasher with Energy Saving Device, 2 Speeds & Pressure Boiler - 180 r/hr

534306 (WTCS180ERA)	66" (1676 mm) Conveyor Dishwasher with Energy Saving Device. Right to Left - 400V
534307 (WTCS180ELA)	66" (1676 mm) Conveyor Dishwasher with Energy Saving Device. Left to Right - 400V

Short Form Specification

Item No.

304 AISI stainless steel front and side panels, strainers and wash and rinse arms. Pressed prewash (45 liters) and wash tank (100 liters) for easier cleaning. Washing tubes in stainless steel. Double-skinned construction and counter balanced doors. Built-in pressure boiler. Self draining wash pump. Automatic start/stop function. Energy saving device. Detached prewash. Wash and single rinse in one compact module. 2 speeds variable on installation. Electric heating. HACCP autodiagnostic check control. Feeding direction: right to left.
Hourly capacity: 1st speed 3240 dishes/180 baskets; 2nd speed: 2160 dishes/120 baskets.

Main Features

- Energy Saving Device (ESD). The ESD is an internal condenser which utilizes the steam generated by the machine in the rinse and wash tanks to heat up incoming cold water. The incoming cold water is heated up to 50 °C and a built in boiler will heat this water up to 80 °C (min) for the final sanitizing rinse.
- Washing cycle is carried out with water circulating at a temperature of 55-65 °C, whereas the rinsing cycle is carried out with clean water coming from the water system, heated to a max. temperature of 80-90 °C.
- Pressure boiler.
- Speed of conveyor can be set through the control panel by the operator. 120 racks/hr or 180 racks/hr.
- Large counter balanced inspection doors in pre wash and wash/ rinse sections allow unrestricted all round access to the wash and rinse area. Door is insulated with injected foam. This adds strength as well as reduces noise and heat loss.
- Large filters sloping towards the front to the smaller pressed filter box for quick removal. Filters feature holes smaller than the concave ant-block wash nozzles so large food cannot enter and block the wash system. Filters easy to remove from pre wash as well as wash/rinse sections.
- Adjustable feet for full access underneath the machine for cleaning.
- Push button self cleaning cycle of the wash and rinse zones for ease of "end of day" cleaning.
- Wash chamber without internal pipes and therefore no hidden dirt traps.
- Pre wash chamber without internal pipes and therefore no hidden dirt traps.
- Self draining wash pumps provide maximum hygiene with no smells and all wash and rinse zones drain automatically at the push of a button.
- Powerful 1.3 hp (1.0 kW) wash pump.
- Pre wash section uses cold water so food remains are not "baked" onto the plates.
- Deep drawn pressed wash tank with fully rounded corners, sloped towards the drain to prevent dirt build up provides fast drainage in only a few minutes. Pressed wash tank with no welded points offer a guaranteed water tight solution.
- Deep drawn pressed 45 liter pre wash tank with fully rounded corners.
- Dishwasher structure is held together with a solid 50 x 50 mm stainless steel tube sub-frame to provide long term sturdiness.
- All main components made in heavy duty anti-corrosive 304 type Stainless steel: tanks, front and side panels, pre wash, wash & rinse arms and caps, doors, front, handle and rack transportation system.
- Pre wash, wash and rinse arms can be easily removed for cleaning.
- IPX5 water protection.
- Autostart/stop ensures that the machine runs only when a rack is passing through it. This reduces both water and energy consumption.

APPROVAL:

Electrolux

Warewashing
Electric Rack Type Dishwasher with Energy Saving Device, 2 Speeds & Pressure Boiler - 180 r/hr

- Electronic control panel features large display to read wash and rinse temperatures.
- Low water consumption. At 180 racks per hour, the machine uses only 255 liters/hr.
- Built-in rinse water heater to increase the temperature of the final rinse water.

Optional Accessories

- Drain kit for modular and compact rack type dishwashers PNC 864150 ❑
- Sanitization kit for WTC180 PNC 864161 ❑
- Kit of 12 stainless steel plugs for washing arms for modular and compact rack type PNC 864239 ❑
- Splash hood for rack type, right side (only for 534307) PNC 864247 ❑
- Splash hood for rack type, left side (only for 534306) PNC 864248 ❑
- Air gap for compact rack type PNC 864309 ❑
- Electric hot air blower, 600mm, for compact rack type, right>left (only for 534306) PNC 864506 ❑
- Electric hot air blower, 600mm, for compact rack type, left>right (only for 534307) PNC 864507 ❑
- Electric drying tunnel, 900mm, with door, for compact rack type, right>left (only for 534306) PNC 864516 ❑
- Electric drying tunnel, 900mm, with door, for compact rack type, left>right (only for 534307) PNC 864517 ❑
- Electric drying tunnel, 600mm, with door, for compact rack type, right>left (only for 534306) PNC 864518 ❑
- Electric drying tunnel, 600mm, with door, for compact rack type, left>right (only for 534307) PNC 864519 ❑
- Electric corner drying tunnel, for compact rack type, right>left (only for 534306) PNC 864520 ❑
- Electric corner drying tunnel, for compact rack type, left>right (only for 534307) PNC 864521 ❑
- Basket for 5 half insulated trays 530x370 mm - red PNC 867005 ❑
- Kit 6 baskets for 1-tank Rack Type dishwashers PNC 867050 ❑
- Kit 9 baskets for 1-tank Rack Type dishwashers PNC 867051 ❑

Electrolux

Warewashing
Electric Rack Type Dishwasher with Energy Saving Device, 2 Speeds & Pressure Boiler - 180 r/hr

Electric

Supply voltage:	
534306 (WTCS180ERA)	400 V/3N ph/50 Hz
534307 (WTCS180ELA)	400 V/3N ph/50 Hz

Machine requires one electrical connection.

Max. current absorbed:	41.5 A

Water:

Inlet Water supply pressure:	44 - 102 psi (3 - 7 bar)
Inlet Cold Water Supply Temperature for pre wash section:	(4-15 °C)
Inlet Hot Water Supply Temperature for wash section:	50 °C
Inlet Water supply hardness:	4-8 gpg (7-14 °fH)
Incoming Cold Water line size (pre wash):	G 3/4"
Incoming Hot water line size (wash section):	G 3/4"
Drain line size (pre wash section):	G 1 1/2"
Drain line size (wash section):	G 1 1/2"
Cold/hot Water consumption:	255 liters/hr
Pre wash temperature:	<35 °C
Pre wash tank size:	45 lt
Pre wash pump power:	0.20 kW
Pre wash pump water flow:	150 l/min
Wash Temperature:	55-65 °C
Wash tank size:	100 liters
Wash pump power:	1.0 kW
Wash pump water flow:	300 l/min
Initial fill Hot water requirements:	112 liters
Final Rinse Temperature:	80-90 °C
Initial fill Cold Water requirements:	45 liters
Booster heating power:	16 hp (12 kW)
Final Rinse water flow:	240 liters/hr
Hot water booster capacity:	12 liters

Air Emission:

Air Flow:	180 m³/h

Unit optionally supplied with extended vent hoods.

Exhaust extraction not more than 177 CFM (300 cubic meters/h).

Refer to installation diagram for minimum exhaust hood installation height.

Key Information:

Productivity racks per hour (max speed):	
534306 (WTCS180ERA)	180 racks/ 3240 dishes
534307 (WTCS180ELA)	180 racks/ 3240 dishes
Productivity racks per hour (min speed):	120 racks/ 2160 dishes
Table to Table connection:	1684 mm
Number of tanks:	2
Height with door open:	2119 mm
Charging hole size (width):	530 mm
Charging hole size (height):	501 mm
External dimensions, Height:	
534306 (WTCS180ERA)	1771 mm
534307 (WTCS180ELA)	1815 mm
External dimensions, Width:	
534306 (WTCS180ERA)	1837 mm
534307 (WTCS180ELA)	2545 mm
External dimensions, Depth:	
534306 (WTCS180ERA)	884 mm
534307 (WTCS180ELA)	891 mm
Net weight:	
534306 (WTCS180ERA)	575 kg
534307 (WTCS180ELA)	447 kg
Shipping weight:	
534306 (WTCS180ERA)	685 kg
534307 (WTCS180ELA)	545 kg
Shipping height:	
534306 (WTCS180ERA)	2060 mm
534307 (WTCS180ELA)	2020 mm
Shipping width:	
534306 (WTCS180ERA)	2810 mm
534307 (WTCS180ELA)	1020 mm
Shipping depth:	
534306 (WTCS180ERA)	1040 mm
534307 (WTCS180ELA)	2760 mm
Shipping volume:	
534306 (WTCS180ERA)	6.02 m³
534307 (WTCS180ELA)	5.69 m³
Noise level:	<70 dBA

Unit predisposed to accept external detergent dispensers, detergent probes and rinse aid dispensers.

Electrolux

Warewashing
Electric Rack Type Dishwasher with Energy Saving Device, 2 Speeds & Pressure Boiler - 180 r/hr

Front

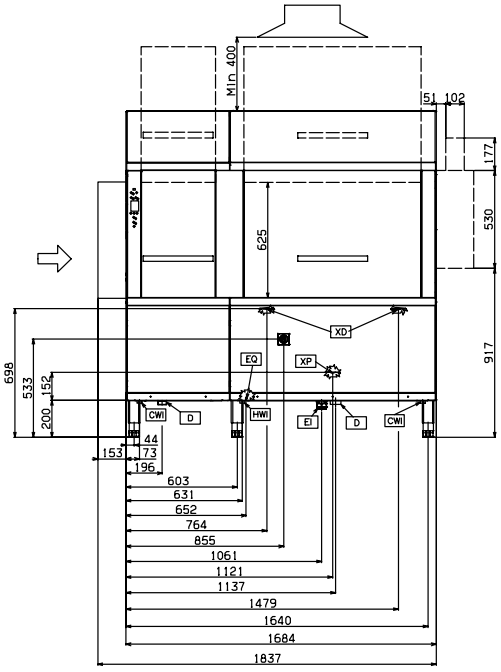

Top

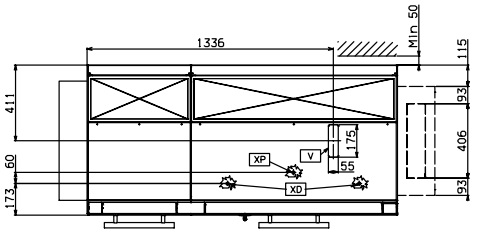

CWI1 = Cold Water inlet 1
D = Drain
EI = Electrical connection
HWI = Hot water inlet
V = Vents
V = Air vents

Side

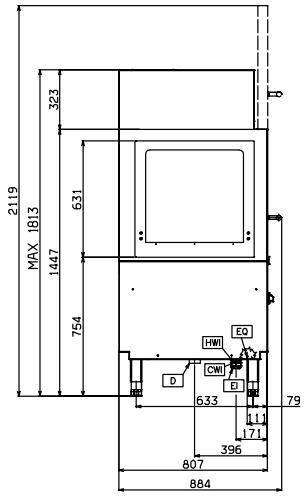

Front

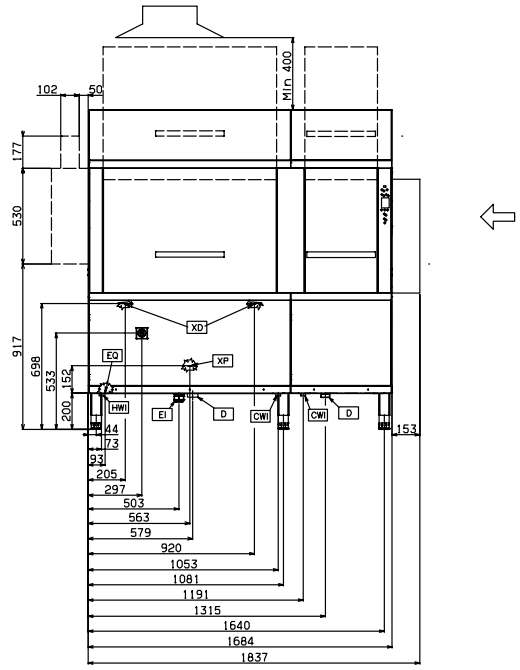

Top

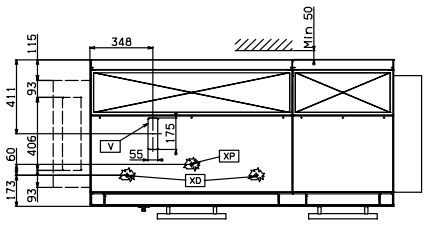

CWI1 = Cold Water inlet 1
D = Drain
EI = Electrical connection
HWI = Hot water inlet
V = Vents
V = Air vents

Side

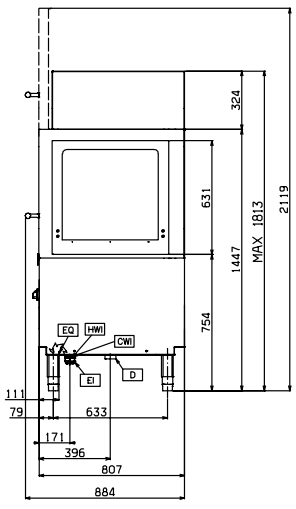

The company reserves the right to make modifications to the products without prior notice. All information correct at time of printing.

2016.10.19