Electrolux

Dough sheeters
Dough Sheeter, table standing belt - 500 mm

ITEM #

MODEL #

NAME #

SIS #

AIA #



Dough sheeters

Dough Sheeter, table standing belt - 500 mm

603535 (LMP500BT) Dough Sheeter, table standing belt - 500 mm - 380-415V/3/50-60

Short Form Specification

Item No.

Table top belt dough sheeter. 1 speed. Working width 500mm and 2 working belts 1000mm in length. Rolling direction can be inverted by the movement of a joystick. Cylinders can be regulated from 0,1 to 34mm in thickness. Chromium plated steel rollers (60mm diam.) Smooth surfaces are painted white. The upper and lower roller scrapers are easily removable for cleaning. The slides can be raised to save space. The belts can be removed for washing. Safety grating is hinged on the structure and equipped with a safety micro-switch to avoid injury. If the gratings are raised over a dangerous level the motor will stop. Flour container fixed on the top of the machine. Emergency stop button with lock and manual re-start ensures the cylinders stop immediately guaranteeing operator safety. Remote foot pedal to change rolling direction, available as an accessory. 1 speed.

Main Features

- Belt dough sheeter for large productions.
- Working width of 500 mm and belt 1000 mm in length.
- Rolling direction may be inverted by moving a joystick.
- Ergonomic controls situated very close together and designed to suit natural movements.
- Flour container fixed on the top of the machine.
- Safety grids hinged to the structure, equipped with a safety micro-switch against injury.
- Motor stops if gratings are raised to a dangerous level.
- Emergency stop button with lock and manual re-start to ensure cylinder halt for added operator safety.
- General electrical protection by fuses.
- Motor protected by a circuit breaker.
- Remote foot pedal to change rolling direction, available as optional accessory.

Construction

- Designed for table top installations.
- Single speed.
- Belt entry feeding speed of 12.2 m/min and exit feeding speed of 22.5 m/min.
- 60 mm diameter cylinders may be regulated for sheets ranging from 0,1 to 34 mm in thickness.
- Slides can be raised to save space and the belts can be removed for washing.
- Upper and lower roller scrapers easily removable for cleaning
- Chromium plated steel rollers.

Optional Accessories

- Remote foot pedal (low tension 24V) to change rolling direction. For electric dough sheeters PNC 653600 ❑

APPROVAL:

Dough sheeters
Dough Sheeter, table standing belt - 500 mm

Front

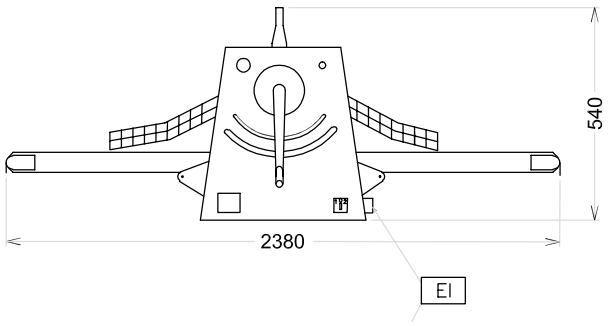

Top

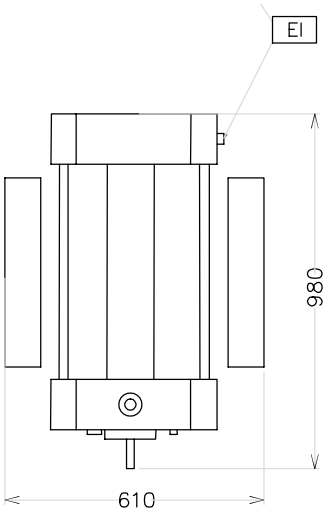

EI = Electrical connection

Side

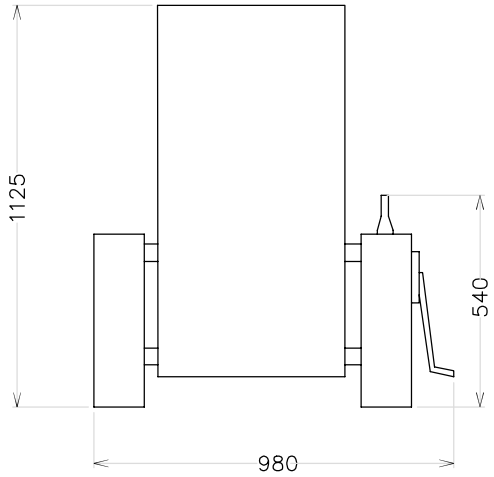

Electric

Supply voltage:	
603535 (LMP500BT)	380-415 V/3 ph/50/60 Hz
Total Watts:	0.55 kW

Key Information:

External dimensions, Height:	540 mm
External dimensions, Width:	2380 mm
External dimensions, Depth:	980 mm
Cold water paste:	140

The company reserves the right to make modifications to the products without prior notice. All information correct at time of printing.

2015.06.17