ITEM # _____

MODEL # _____

NAME # _____

SIS # _____

AIA # _____

Modular Cooking Snack Line
Half Module Electric Fry Top, Ribbed Plate



Modular Cooking Snack Line

Half Module Electric Fry Top, Ribbed Plate

285746 (SRE360)	Electric fry top, ribbed plate
285810 (SRE360M)	Electric fry top, ribbed plate - 230V

Short Form Specification

Item No. _____

Constructed completely in 304 AISI stainless steel. Rounded edges, rear splashback and side splashguards. Mild steel plate, ribbed type, resistant to thermal stress. Armoured elements positioned beneath the cooking surface. Temperature adjustable from 100° to 300°C. Oil drainage via a hole at the front into a pull-out drawer.

Main Features

- Electric elements in incoloy positioned under the cooking plate.
- IPX 4 water protection.
- Scrapers with smooth or ribbed blades included as standard.
- Large drain hole on cooking surface permits the draining of fat into large 1 liter collector placed under the cooking surface.
- Safety thermostat and thermostatic control.
- Unit to be mounted on open base cupboards, bridging supports or cantilever systems.
- Large grease collection container available as optional accessory to be installed under top units over open base cupboard.
- Stainless steel high splash guard on the rear and sides of cooking surface. Splash guard can be easily removed for cleaning.
- Temperature range of griddle from 100°C to 300°C.

Construction

- Cooking surface in mild steel for optimum grilling results.
- Cooking surface to be completely smooth or completely ribbed.
- Model has right-angled side edges to allow flush fitting joints between units, eliminating gaps and possible dirt traps.
- One piece pressed 1.5 mm work top in Stainless steel.
- All exterior panels in Stainless Steel with Scotch Brite finishing.

Optional Accessories

- 2 gulleys with joining panel for fry top — PNC 285799 ❑
- Shaper for fried eggs (only for 285810) — PNC 285802 ❑

APPROVAL: _____

Modular Cooking Snack Line
Half Module Electric Fry Top, Ribbed Plate

Modular Cooking Snack Line
Half Module Electric Fry Top, Ribbed Plate

Front

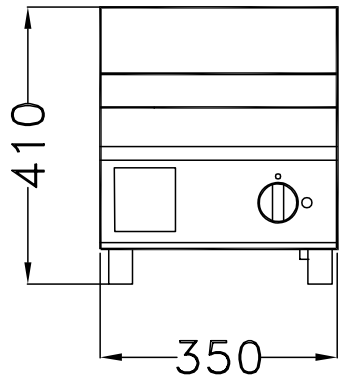

Top

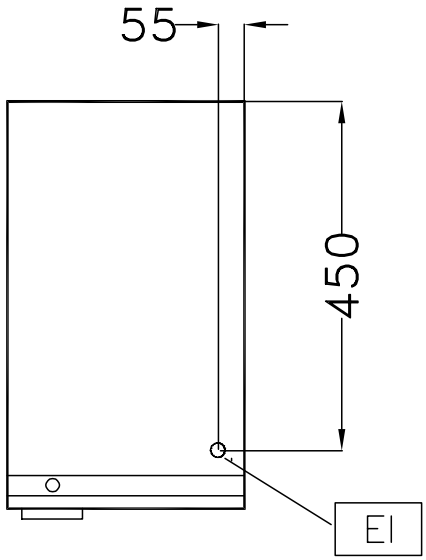

EI = Electrical connection
EQ = Equipotential screw
F = Fumes outlet
V = Air vents

Side

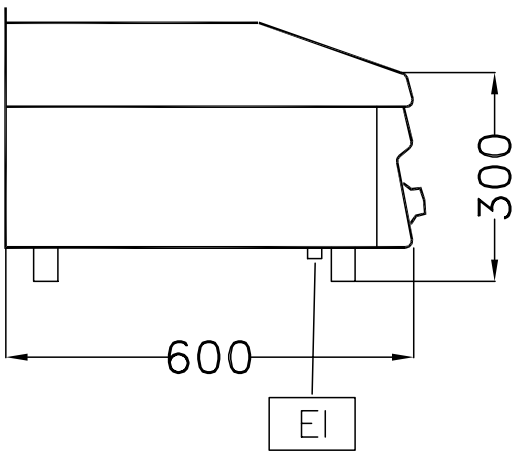

Electric

Supply voltage:	
285746 (SRE360)	400 V/3N ph/50/60 Hz
285810 (SRE360M)	230 V/1N ph/50/60 Hz
Electrical power max.:	
285746 (SRE360)	4 kW
285810 (SRE360M)	3 kW
Total Watts:	
285746 (SRE360)	4 kW
285810 (SRE360M)	3 kW

Key Information:

Working Temperature MIN:	100 °C
Working Temperature MAX:	300 °C
Net weight:	27 kg
Shipping weight:	29 kg
Shipping height:	560 mm
Shipping width:	400 mm
Shipping depth:	700 mm
Shipping volume:	0.1568 m³

The company reserves the right to make modifications to the products without prior notice. All information correct at time of printing.

2016.12.19