Electrolux

High Productivity Cooking
Electric Bratt Pan with Stirrer 150lt

ITEM #

MODEL #

NAME #

SIS #

AIA #



High Productivity Cooking

Electric Bratt Pan with Stirrer 150lt

291149 (IBRSE14SS) Electric bratt pan with stirrer 150/180lt

Short Form Specification

Item No.

Made from AISI 304 stainless steel. Heavy duty 3mm thick top. Pan with walls 2mm in thickness and bottom 18mm in thickness. Lid fitted on hinges with counter-balancing springs. Stirrer equipped with harmonic steel arms and teflon blade. Speed-adjustable continuous stirring system with the possibility of inverting the direction of rotation. Pan tilting with safety device. Safety device to cut off power when well is raised. 24-V. control panel featuring electronic temperature regulator, electronic analogic timer, pushbutton control for the tilting and return of the pan and mixer speed regulator. Hot and cold water tap. Working temperature from 120 to 220°C. Pre-arranged for connection to integrated HACCP system. IPX5 water protection.
Ideal for the cooking of sauces, stews, polenta, risotto and for the preparation of braised and browned meat.
Electric heating via stainless steel elements mounted directly onto the pan base; heating transmission by conduction.
Well capacity: 180 litres. Usefull capacity: 150 litres.

APPROVAL:

Main Features

- Control panel featuring electronic temperature regulator, electronic timer, push-button control for the tilting and return of the pan, loading water selector and mixer speed regulator.
- Elevating basket through a low tension (24 volt) electromechanical linear activator, thus guaranteeing high safety and reliability standards and remarkable reduction of noisiness.
- Safety device to cut off power when well is raised.
- Speed-adjustable continuous stirring system with the possibility of inverting the direction of rotation.
- Lateral balanced opening of the lid.
- Heating regulation with simmostat and digital timer.
- Stirring device designed so that the bratt pan can continue to operate even when the lid is open.
- Controls recessed into the control panel for greater protection.
- Water loaded by solenoid valve with panel push-button.
- IPX5 water protection.
- Complies with main international certification bodies and is CE marked.
- Disposed for connection to integrated HACCP system.

Construction

- The machine can be placed against the wall.
- 304 AISI stainless steel tank and bottom 18 mm in thickness.
- 304 AISI stainless steel outside panels.
- Combustion chamber, flue and mixer motorization integrated with the tank.
- Stirrer equipped with harmonic steel arms and teflon blades for greater durability and more efficient scraping of the base.

Optional Accessories

- Trolley with lifting & removable tank — PNC 922403 ❑

Electrolux

High Productivity Cooking
Electric Bratt Pan with Stirrer 150lt

High Productivity Cooking
Electric Bratt Pan with Stirrer 150lt

Front

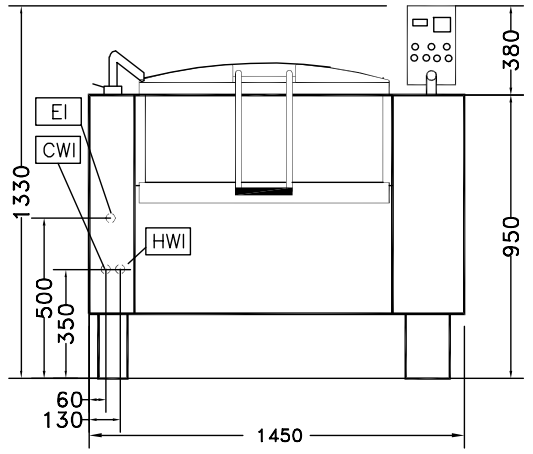

Top

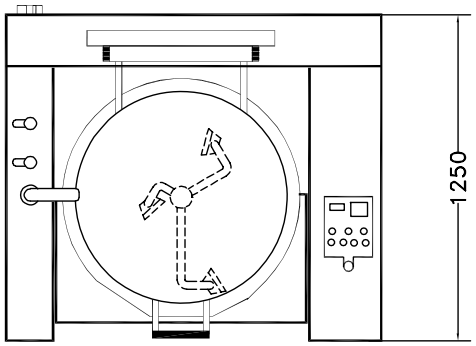

CWI1 = Cold Water inlet
EI = Electrical connection
HWI = Hot water inlet

Side

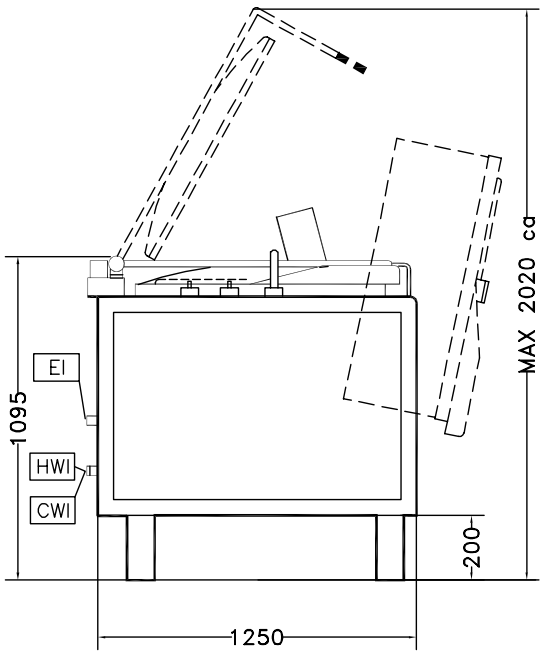

Electric

Supply voltage:	
291149 (IBRSE14SS)	400 V/3N ph/50 Hz
Electrical power, max:	15.5 kW

Key Information:

Working Temperature MIN:	120 °C
Working Temperature MAX:	220 °C
External dimensions, Height:	1095 mm
External dimensions, Depth:	1250 mm
Net weight:	661 kg
Net vessel useful capacity:	150 lt
Tilting mechanism:	Automatic

The company reserves the right to make modifications to the products without prior notice. All information correct at time of printing.

2015.11.16