Electrolux

Digital Cabinets
Roll-Through Hot Cupboard 1600 lt - 2 door

ITEM #

MODEL #

NAME #

SIS #

AIA #



Digital Cabinets

Roll-Through Hot Cupboard 1600 lt - 2 door

726516 (RI116H2FT)	Roll-Through Hot Cupboard 1600 lt - 2 door- 400 V/3N/50Hz

Short Form Specification

Item No.

The Electrolux range of Roll-in/Pass-Through cabinets has been designed for high productivity kitchens namely big canteens, hospitals, in-flight or istitutional kitchens, which demand the highest efficiency for the area's work flow. The whole range offers different sizes, refrigerated roll-in and roll-in\pass though and hot roll-in refrigerators. All models are finished in top quality materials to guarantee durability. The model detailed in this sheet is a 1600 liter roll-through hot cupboard with 2 doors.

Main Features

- Two full doors.
- The operating temperature can be adjusted from 50 to 75 °C to suit both meat and dairy storage requirements.
- Simple control panel: on/off switch and digital temperature display.
- Universal shock-protectors on all sides.

Construction

- Interior cell is entirely constructed in 304 AISI stainless steel.
- Exterior finish in AISI 304 stainless steel for easy cleaning.
- Developed and produced in ISO 9001 and ISO 14001 certified factory.
- 72 mm thick insulation with cyclopenthane injection for long-term insulation and energy saving.

Optional Accessories

• 17x2/1GN container trolley	PNC 361258 ❑
• 17x2/1GN compact container trolley	PNC 361260 ❑
• Trolley for 2/1GN roll-in rack	PNC 880017 ❑
• Base for roll-in-rack	PNC 880018 ❑
• Humidifier kit for hot roll-in cabinet, 1600lt	PNC 880188 ❑
• Kit with 2 hinges for door reversibility	PNC 881432 ❑
• 2/1GN roll-in rack	PNC 881449 ❑
• Printer for HACCP basic version (for cabinets and counters with digital control)	PNC 881457 ❑
• Trolley with banquet rack 92 plates for 20x2/1GN ovens and bcf, 85mm pitch	PNC 922055 ❑

APPROVAL:

Electrolux
Digital Cabinets
Roll-Through Hot Cupboard 1600 lt - 2 door

Digital Cabinets
Roll-Through Hot Cupboard 1600 lt - 2 door

Front

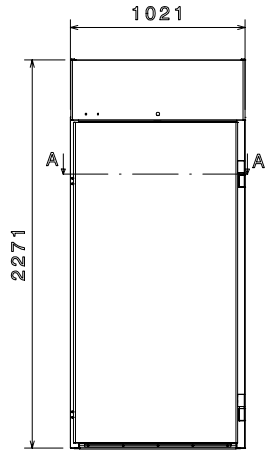

Top

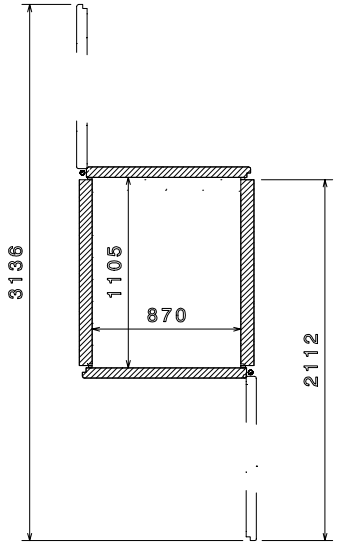

EI = Electrical connection
RI = Refrigerant Inlet
RO = Refrigerant Outlet

Side

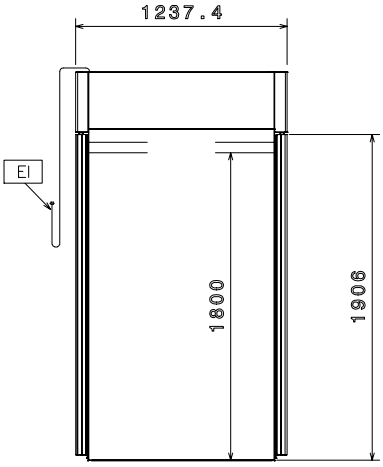

Electric

Supply voltage:	
726516 (RI16H2FT)	400 V/3N ph/50 Hz

Key Information:

Door hinges:	Right Side
Built-in Compressor and Refrigeration Unit	
External dimensions, Height:	2271 mm
External dimensions, Width:	1021 mm
External side panels:	304 AISI
External top panels:	304 AISI
External door material:	304 AISI
Internal panels material:	304 AISI

Refrigeration Data

Operating temperature min.:	50 °C
Operating temperature max.:	75 °C

The company reserves the right to make modifications to the products without prior notice. All information correct at time of printing.

2016.07.28