Electrolux

Modular Cooking Range Line thermaline 80 - Electric Static Oven Base, 1 Side - H=550

ITEM #

MODEL #

NAME #

SIS #

AIA #



Modular Cooking Range Line

thermaline 80 - Electric Static Oven Base, 1 Side - H=550

588247 (MA8ADAHOAO) Electric static oven base, one-side operated

Short Form Specification

Item No.

Electric static oven base with 40 mm thick oven door and ribbed enamelled steel base plate. Constructed according to 1.4301 (AISI 304). Oven chamber with 2 levels of runners for 2/1 GN shelves to enable simultaneous and faster cooking. Heavy duty thermos

Main Features

- Overheat protection: a temperature sensor switches off the supply in case of overheating.
- IPX5 water resistance certification.
- 40 mm thick oven door for heat insulation.
- All major components may be easily accessed from the front.
- Metal knobs with embedded hygienic silicon "soft" grip for easier handling and cleaning. The special design of the controls prevent infiltration of liquids or soil into vital components.
- Standby function for energy saving and fast recovery of maximum power.
- Oven chamber to have 2 levels of runners to accommodate 2/1 GN trays and ribbed enamelled steel base plate.
- The upper heating element of the oven can also be used for grilling.
- Manual control of humidity in cooking chamber.
- Electronic sensor for precise temperature control.
- Heavy duty thermostat with temperature range up to 300°C.
- Handles are ergonomically designed with silicon "soft" grip for easy handling and cleaning.
- Unit constructed according to DIN 18860_2 with 70 mm recessed plinth.
- Oven temperature up to 300 °C

Construction

- Flat surface construction with minimal hidden areas to easily clean all surfaces

APPROVAL:

Electrolux
Modular Cooking Range Line
thermaline 80 - Electric Static Oven Base, 1 Side - H=550

Modular Cooking Range Line thermaline 80 - Electric Static Oven Base, 1 Side - H=550

Front

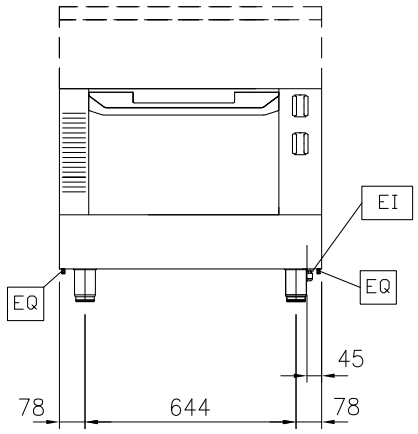

Top

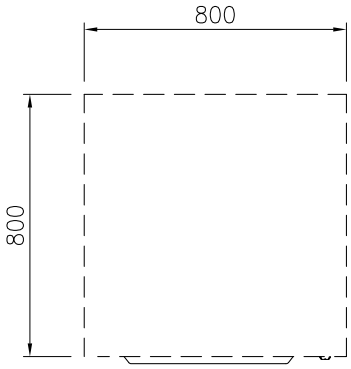

EI = Electrical connection
EQ = Equipotential screw

Side

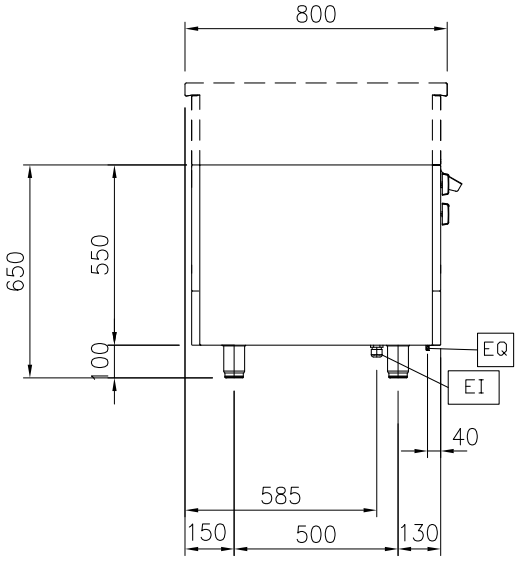

Electric

Supply voltage:	
588247 (MA8ADAHOAO)	400 V/3N ph/50/60 Hz
Total Watts:	5 kW

Key Information

Configuration:	One-Side Operated
Oven working Temperature:	60 °C MIN; 300 °C MAX
Oven Cavity Dimensions (width):	575 mm
Oven Cavity Dimensions (height):	300 mm
Oven Cavity Dimensions (depth):	700 mm
External dimensions, Height	550 mm
External dimensions, Width	800 mm
External dimensions, Depth	800 mm
Net weight:	93 kg
Oven GN	GN 2/1

The company reserves the right to make modifications to the products without prior notice. All information correct at time of printing.

2017.02.03

Modular Cooking Range Line thermaline 80 - Electric Static Oven Base, 1 Side - H=550

Included Accessories

- 1 of Grid, chromium plated, for ovens 2/1 GN PNC 910652

Optional Accessories

- Baking sheet 2/1 GN for ovens PNC 910651 ❑
- Bottom steel plate 2/1 GN for fire clay plate 800&900 with baking oven PNC 910655 ❑
- Fire clay plate 2/1 GN for ovens PNC 910656 ❑
- Stainless steel side panel (12mm), 800x800mm, freestanding PNC 912508 ❑
- Stainless steel front kicking strip, 800mm width PNC 912598 ❑
- Stainless steel side kicking strips left and right, freestanding, 800mm width PNC 912619 ❑
- Stainless steel side kicking strips left and right, wall mounted, 800mm width PNC 912622 ❑
- Stainless steel side kicking strips left and right, back-to-back, 1600mm width PNC 912625 ❑
- Stainless steel plinth, against wall, 800mm width PNC 912806 ❑
- Stainless steel plinth, freestanding, 800mm width PNC 912825 ❑
- Stainless steel side panel, 800x800mm, flush-fitting, freestanding PNC 913086 ❑
- Stainless steel panel (12mm) 800x800mm, against wall, left side PNC 913094 ❑
- Stainless steel panel 800x800mm, flush-fitting, against wall, left side PNC 913096 ❑
- Stainless steel panel (12mm) 800x800mm, flush-fitting, against wall, right side PNC 913098 ❑
- Stainless steel panel 800x800mm, flush-fitting, against wall, right side PNC 913100 ❑
- Back panel, 800x550mm, for bases and units, one-side operated PNC 913182 ❑
- Stainless steel side panel, left, h=800, flush PNC 913212 ❑
- Stainless steel side panel, right, h=800, flush PNC 913213 ❑
- Stainless steel side panel, left, h=800 PNC 913216 ❑
- Stainless steel side panel, right, h=800 PNC 913217 ❑
- - NOT TRANSLATED - PNC 913244 ❑
- - NOT TRANSLATED - PNC 913257 ❑
- - NOT TRANSLATED - PNC 913264 ❑
- - NOT TRANSLATED - PNC 913266 ❑
- - NOT TRANSLATED - PNC 913273 ❑
- - NOT TRANSLATED - PNC 913274 ❑

The company reserves the right to make modifications to the products without prior notice. All information correct at time of printing.

2017.02.03