MultiFresh®

More than Fresh.

IRINOX

MF 25.1



Organize your production and processes with flexibility 24 hours a day.

YIELD PER CYCLE

from +90°C to +3°C	25 kg
from +90°C to -18°C	25 kg

TRAY CAPACITY NR.

tray height 65/60 mm	4 (GN 1/1 o 600x400 mm)
tray height 40 mm	5 (GN 1/1 o 600x400 mm)
tray height 20 mm	8 (GN 1/1 o 600x400 mm)

DIMENSIONS

width	790 mm
depth	771 mm
height	870 mm
weight	115 kg

ELECTRICAL DATA

max absorbed power	1,2 kW
max absorbed current	6,5 A
voltage	230 V-50Hz (1N+PE)

UNIQUE SELLING POINTS

MYA, TOUCH SCREEN INTERFACE

MultiFresh® comes with *MyA*, a **touch screen interface with 7"** screen which makes using the machine simple, even for inexperienced operators. The **intuitive icons** give access to the **numerous functions** provided by MultiFresh® for optimum control of all the production processes.
MyA is used to **customize all the parameters for each cycle** – ventilation, time, temperature, etc. – to create the ideal process for each item.

BLAST CHILLING AND SHOCK FREEZING CYCLES

MultiFresh® chills to +3°C and freezes to -18°C **from any temperature, including boiling hot products,** maintaining the consistency, moisture and nutrients of each type of food. MultiFresh® rapidly goes through the temperature range of **+90°C to +70°C, fundamental for quality**, and **+40°C to +10°C, to limit bacterial proliferation.** It freezes to **-18°C**, guaranteeing the **formation of micro-crystals** that do not spoil the structure of the food.

THAWING/REGENERATING CYCLES

MultiFresh® allows you to **choose the temperature, time and thickness** at which the food should be thawed and ready for use, by means of **controlled ventilation** in the chamber. Controlling the thawing process and setting the right temperature slows down bacterial proliferation and **keeps the structure of food intact.**

PROOFING CYCLES

MultiFresh® provides **cycles for natural proofing** that maintains the product's moisture, without sudden changes in temperature. MyA is used to plan the time at which to have perfectly proofed products and parameters are easily set to create the ideal environment for proofing. At the end of the cycle **products can be proofed and blast chilled or shock frozen,** as required.

LOW TEMPERATURE COOKING CYCLES

MultiFresh® **cooks meat or fish at low temperature, going automatically on to blast chilling or shock freezing** immediately after cooking. The main advantages of this method are exalted flavour and more uniform cooking.
For ice cream makers and confectioners MultiFresh® provides **cooking cycles for meringues or fruit in syrup** used to make bases for single portions, semifreddos and dacquoise in-house, and better manage production costs.

REGENERATION CYCLES

MultiFresh® is used to regenerate dishes by setting the temperature and time at which the product must be hot, **ready to serve, going automatically from +3°C or -18°C to regeneration** to the required temperature, without spoiling it.

HOLDING CYCLES (catering and ice cream makers only)

MultiFresh® keeps food intact **at the required temperature, positive or negative**, according to needs.

CHOCOLATE CYCLES (confectioners and ice cream makers)

MultiFresh® comes with **cycles dedicated to chocolate**, which keep it at the **right level of moisture and temperature for perfect preservation over a long period**. MultiFresh® **melts and holds several types of chocolate,** reducing waiting time. It **partially freezes (at -7°C)** pralines and chocolate decorations and gives a velvety finish to chocolate figures. It rapidly **chills chocolate in moulds** so that it is quickly available and moisture does not form on the product.

PASTEURIZATION

MultiFresh® **pasteurizes and blast chills (+3°C) or pasteurizes and shock freezes (-18°C)** so that products can be held longer.

MAXIMUM FLEXIBILITY

MultiFresh® is easily set up for all food business areas - *Catering, Confectioners, Ice Cream Makers and Bakers* – with a choice of numerous functions for each sector – *Chilling, Freezing, Thawing, Reconstitution, Proofing, Low Temperature Cooking, Chocolate, Holding, Regeneration and Pasteurization.*

IRINOX BALANCE SYSTEM®:

The principle on which blast chillers operate consists of removing heat from food in the shortest time possible in order to limit product ageing. Our blast chillers guarantee **the fastest heat removal, also with boiling hot food,** due to the Irinox Balance System®, i.e. **the perfect size of the main refrigerator components** (condenser, evaporator, compressor and fan).

- **Condenser**

Condensers are built to the drawings and specifications of Irinox R&D and have **large exchange surfaces** to guarantee **high performance even with high ambient temperatures.**

UNIQUE SELLING POINTS

They are built to reduce acoustic impact and the amount of refrigerant involved.

▪ **Evaporator**

Built to the drawings and specifications of Irinox R&D with **large heat exchange surfaces** to prevent food dehydration. A Multi-injection system ensures good performance and **cataphoresis** anti-corrosion treatment prolongs the life of the evaporator.

▪ **Compressor**

The compressors selected by Irinox guarantee **low energy consumption and great reliabilit**y and meet their stated productivity.

▪ **Ventilators**

The new generation **variable speed fans** with innovative design and materials are **exclusive to Irinox**. They provide **uniform ventilation and controlled humidity** throughout the chamber. The system that stops the fan immediately when the door is opened avoids loss of cold with the door open.

SANIGEN®: SANIFICATION 24/7

The Irinox patented sanitization system **sanitizes every part of the chamber,** including the **areas difficult to access for cleaning** (e.g. the evaporator).

The system's efficiency, tested by Udine University and **certified by the Italian Ministry of Health**, guarantees **bacteria abatement of 99.5%**. *Sanigen*® also acts to **eliminate unpleasant odours** that can occur at the end of the work cycle or the working day.

MULTISENSOR®

MultiFresh® comes with a *MultiSensor*® **5-point probe** for perfect temperature control. **Core temperature readings** provide *MyA* software with extremely precise indications which allow prompt **regulation of ventilation, temperature and humidity** in the chamber. The special shape of the *MultiSensor*® probe makes it **easy to remove from food** without spoiling any part of it and without the need to overheat it. The Irinox patented system of **automatic attachment to the door** facilitates its use and prevents malfunctioning.

MULTIRACK®

The adjustable tray holder **patented by Irinox** allows operators to **double the number of trays** loaded in each model. It is easy to set the distance between one tray and the next, allowing **better air distribution on the product** and greater temperature uniformity on all levels.

Every baker can choose between GN1/1 or 600X 400 mm trays.

MANUAL DEFROSTING

MultiFresh® can be defrosted manually at the end of the day. It does not **defrost automatically during the work cycle in progress** because it is constantly able to remove all the heat from the chamber, even when it contains boiling hot food, and this prevents the formation of ice on the evaporator.

IRINOX MANUFACTURING QUALITY

Below are some details of the manufacture and functions of MultiFresh®:

▪ **Automatic switch from manual mode (timed) to automatic mode (with probe);** MultiFresh® senses if the probe has been inserted or not.

▪ **Wireless** data transfer to easily download and save work process data on dedicated software **(Haccp Control Software).**

▪ **Maximum cleanliness and hygiene** due to rounded corners and components situated in the chamber so that they can be accessed and cleaned easily.

▪ **Compact condenser units** can also be provided on request in different versions: water, air, super silent, incorporated and remote.

▪Refrigerant gas R404.

IRINOX CERTIFICATION:

▪ **CE:** Certification that the product complies with the relevant European legislation and may therefore circulate freely in the member states of the European Union.

▪ **GOST R:** GOST-R certification for products to be exported to Russia

▪ **TÜV / PED (Pressure Equipment Directive).**
Certificate number:
TIS-PED-MI-12-05-001918-5534

▪ **EMC conformity test** (performed by an accredited third party laboratory): conformity to Directive 2004/108/

UNIQUE SELLING POINTS

CE regarding Electromagnetic Compatibility (EMC) is a compulsory requisite in Europe for obtaining the CE mark and is now becoming obligatory for an increasing number of products in countries outside the EU.

- **LVD conformity test** (performed by an accredited third party laboratory): conformity to the Low Voltage Directive.

FRONT VIEW

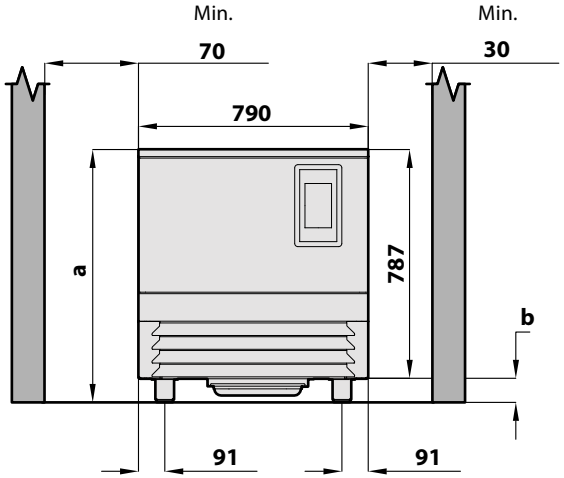

SIDE VIEW

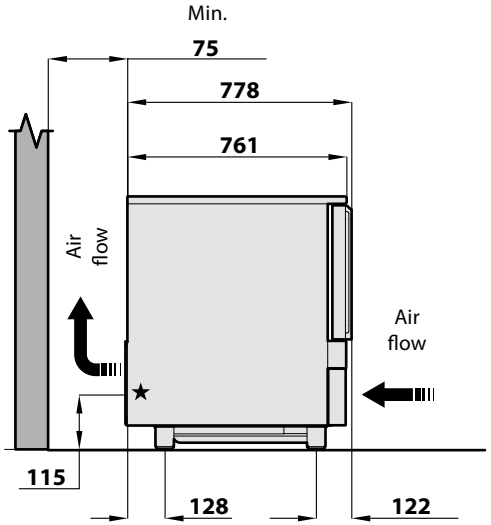

TOP VIEW

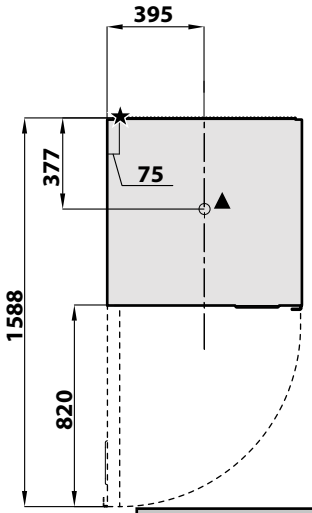

★ Main power cable
▲ Drain pipe ø 31

ALTEZZA / HEIGHT	a	b
Piedi standard / Standard feet	870 mm	80÷115 mm
Piedi ribassati / Lower feet	850 mm	60÷80 mm
Ruote / Castors	885 mm	96 mm

TRAYS CAPACITY		
Yeld for blast chilling cycle (90/+3°C) *	Kg	25
Yeld for shock freezing cycle (90/-18°C) **	Kg	25
*: within 90 min. **: within 240 min.		

AIR CONDENSER				
Model / Voltage		230V 1N+PE	230V 1N+PE	200V 2+PE 208V 2+PE
		50Hz	60Hz	50/60Hz
Total rating	KW	1,2	1,3	1,3 / 1,3
Total output	A	6,5	6,3	6,5 / 6,4
Supply cable size	mm^2	3G1,5	3G1,5	3G1,5
Compressor rating	KW (HP)	0,36 (0,5)	0,36 (0,5)	0,36 (0,5)
Refrigeration Yield (-10/40°C)	W	1727	1623	1623
Condensator rating (-10/40°C)	W	2683	2549	2549
Gas type / Nominal gas charge		R404A / 1,8Kg		
Minimum air circulation	m^3/h	1100	1210	1100 / 1210
Maximum ambient air temperature	°C	32		
Cabinet dimension (WxDxH)	mm	790x771x870		
Cabinet weight	Kg	-		

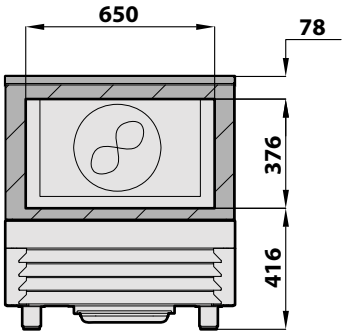

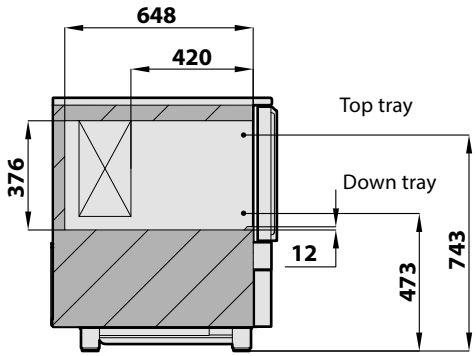

INTERIOR VIEW

measurement in millimeters

IRINOX

Mod.: **MF0510001**

Ed.: **05/13**

Rev.: **00** **MYA**