Electrolux

air-o-chill
Blast Chiller-Freezer 10 2/1 70 kg - Remote with USB

ITEM #

MODEL #

NAME #

SIS #

AIA #



727675 (AOFPS102CR) Blast chiller/freezer 70/70kg, 10xGN2/1 or 600x800mm (36 levels pitch 20mm), pre-arranged for remote cooling unit with USB

Short Form Specification

Item No.

For 10 GN2/1 or 600x800 mm trays. Up to 36 ice cream basins 5kg (mm 165x360x125h). 36 levels, pitch 20mm. Load capacity: chilling 70 kg; freezing 70 kg (UK guidelines). Compatible with Zanussi, Alpeninox and Rational SCC Lengthwise ovens. Main components in 304 AISI stainless steel. Internal rounded corners and drain. Remote refrigeration unit. Cruise cycle for fully automatic blast chilling with food probe. Automatic detection of food probe insertion. Automatic and Manual defrost. Blast chilling real residual time estimation (A.R.T.E.). Turbo cooling function. Specific cycles for ice cream. Evaporator with antirust protection. Digital temperature and time display. HACCP and Service alarms with data logging. Operating air temperature: +90 -41°C. Cyclopentane insulation (HCFC, CFC and HFC free). R404a refrigerant gas (HCFC and CFC free).

APPROVAL:

Main Features

- Blast Freezing cycle: 70 kg from 90°C up to -18°C in less than four hours.
- Blast Chilling cycle: 70 kg from +90°C up to + 3°C in less than 90 minutes.
- Soft Chilling (air temperature -0°C).
- Hard Chilling (air temperature -20°C).
- Shock freezing (low air temperature adjustable up to -41°C).
- Holding at +3 °C for chilling or -22 °C for freezing, automatically activated at the end of each cycle, to save energy and maintain the target temperature (manual activation is also possible).
- Turbo cooling: chiller works continuously at the desired temperature; ideal for continuous production.
- Cruise cycle: the chiller automatically sets the parameters for the quickes and best chilling (it works by probe).
- High density polyurethane insulation, 75 mm tickness, HCFC free.
- Two specialized cycles:
  P1 brings down ice-cream temperature to -14°C (measured at the core when probe is inserted). Once set temperature is reached, the temporary maintenance phase automatically begins, holding the -14°C temperature.
  P2 sets temperature to -36°C / -40°C for an indefinite amount of time, maintaining the ventilation active. Temperature is adjustable up to -40°C without interrupting the cycle, allowing ice-cream to be kept longer in the freezer.
- Control unit provides several operating settings (programmable parameters): time/core temperature according to NF and UK regulations, time/air temperature/probe personalized according to national regulations, sterilizing cycle: UV lamps built-in (on request), 3 single sensor or 3-sensor temperature probes (as accessory), ideal for meats, automatic defrosting and manual defrosting.
- 3-sensor core probe as standard and automatic detection of the core probe insertion.
- Probe-driven cycles feature ARTE (Algorithm for Remaining Time Estimation) to make planning the activities easier.
- Control unit provides two large displays to read out: time, core temperature, cycle countdown, alarms, service information.
- Audible alarm starts when the cycle ends or terminates abnormally.
- All information related to the different operating models are recorded: date, time, cycle, core temperature, holding temperature, HACCP accordance.
- Multipurpose internal structure is suitable for 10 grids GN 2/1 (36 positions available with 20 mm pitch) 20 grids or trays 600 x 400 mm and10 grids or trays 600 x 800 mm (36 positions available with 20 mm pitch) or 36 ice-cream basins of 5 kg each (h 125 x 165 x 360).
- USB connection: to download HACCP data from the blast chiller (time, cavity temperature, alarms,

Electrolux
air-o-chill
Blast Chiller-Freezer 10 2/1 70 kg - Remote with USB

and probe temperature).
- Performance guaranteed at ambient temperatures of +43°C.

Construction

- Main components in 304 AISI stainless steel.
- Developed and produced in ISO 9001 and ISO 14001 certified factory.
- Evaporator with antirust protection.
- Motors and fan waterproof protected IP23.
- PC connection on request, gate RS 485.
- Stand alone printer as accessory.
- Inner cell with fully rounded corners.
- Environmentally friendly: R404a as refrigerant fluid.
- Removable magnetic gasket door with hygienic design.
- Ventilator swinging hinged panel for access to the evaporator for cleaning.
- Automatic heated door frame.
- Thermostatic expansion valve to optimize the cooling unit efficiency.
- Solenoid valve included.
- No water connections required.
- Waste water can be plumbed into drain, but can also be collected in an optional waste container.
- Requires remote refrigeration connection.

Included Accessories

- 1 of 3-sensor probe for blast chiller and blast chiller/freezers PNC 880212
- 2 of Set of 5 stainless steel runners for blast chiller LW 70kg PNC 880313

Optional Accessories

- Kit for HACCP advanced connection for LW and CW blast chiller&freezer PNC 880183 ❑
- 3-sensor probe for blast chiller and blast chiller/freezers PNC 880212 ❑
- 1 single-sensor probe for blast chiller and blast chiller&freezers PNC 880213 ❑
- 2 extra single-sensor probes for blast chiller/freezers PNC 880214 ❑
- Kit of 3 single sensor probes for blast chiller/freezers PNC 880215 ❑
- Pastry rilsan grid for blast chiller, lengthwise (600x400mm) PNC 880294 ❑
- Set of 5 stainless steel runners for blast chiller LW 70kg PNC 880313 ❑
- Slide-in rack support for 10x2/1GN blast chiller& freezer, lengthwise, 70kg PNC 881029 ❑
- KIT BUZZER FOR BCF LW USB PNC 881143 ❑
- Air cooled remote unit for 70kg air-o-chill - R404A PNC 881157 ❑
- Water cooled remote unit for 70kg air-o-chill PNC 881170 ❑
- Printer for HACCP basic version (for cabinets and counters with electronic control) PNC 881532 ❑
- Trolley for roll-in rack 10x2/1GN ovens and bcf PNC 922042 ❑
- Tray rack with wheels for 10x2/1GN ovens and bcf, 65mm pitch PNC 922043 ❑
- Tray rack with wheels for 8x2/1GN ovens and bcf, 80mm pitch PNC 922045 ❑
- Pastry tray rack with wheels, for 10x2/1GN ovens and bcf, 80mm pitch (8 runners). Suitable for 600x400mm pastry trays PNC 922067 ❑

The company reserves the right to make modifications to the products without prior notice. All information correct at time of printing.

2017.11.17

air-o-chill
Blast Chiller-Freezer 10 2/1 70 kg - Remote with USB

Front

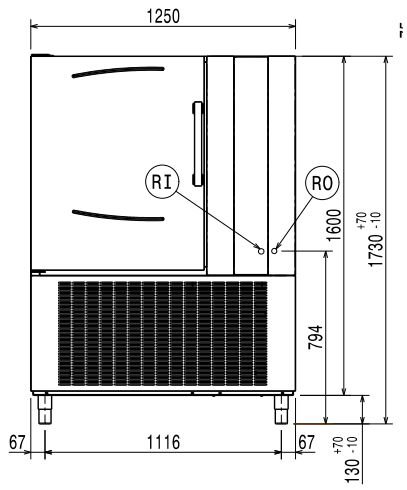

Side

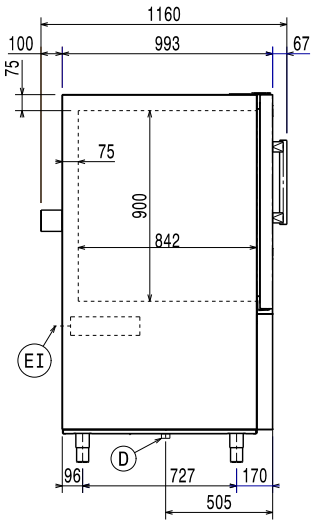

D = Drain
EI = Electrical inlet (power)
RO = Refrigerant Outlet

Top

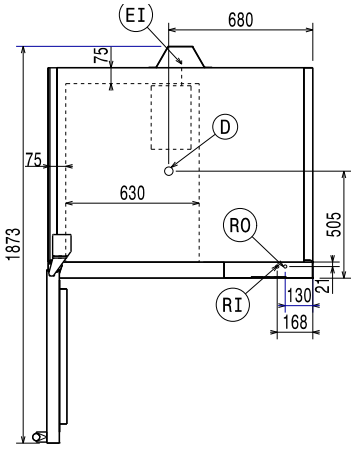

Electric

Supply voltage:	
727675 (AOFPS102CR)	220-240 V/1 ph/50/60 Hz
Electrical power max.:	0.45 kW
Defrost Power:	5.6 kW
Current consumption:	8.91 A
Circuit breaker required	

Note: electrical power, current consumption and defrost power are necessary for installation.

Installation:

Clearance:	5 cm on sides and back.

Please see and follow detailed installation instructions provided with the unit

Capacity:

GN:	10 - 2/1 containers
Max load capacity:	70 kg

Key Information:

Door hinges:	Left
External dimensions, Width:	1250 mm
External dimensions, Height:	1730 mm
External dimensions, Depth:	1160 mm
Net weight:	290 kg
Shipping weight:	320 kg
Shipping volume:	2.92 m³
Chilling-Freezing Productivity per cycle (NF Regulations):	50.4 kg - 50.4 kg
Chilling-Freezing Productivity per cycle (UK Guidelines):	70 kg - 70 kg

Refrigeration Data

Refrigerant type:	R404a
Requires remote refrigeration: (not included)	11.5 hp (8.59 kW, 29,000 BTU), Suction T at -20 °F, Ambient T at 90 °F.
Suggested refrigeration power*:	9320 W
Condition at evaporation temperature:	-10 °C
Condition at condensation temperature:	45 °C
Condition at ambient temperature:	32 °C
Connection pipes (remote) - outlet:	18 mm
Connection pipes (remote) - inlet:	9.5 mm

Note: refrigeration power calculated at a distance of 20 linear mt.

The company reserves the right to make modifications to the products without prior notice. All information correct at time of printing.

2017.11.17