Electrolux

ITEM #

MODEL #

NAME #

SIS #

AIA #

air-o-chill
Blast Chiller-Freezer 6 1/1 30 kg
Tower installation with USB



727665 (AOFPS061CT0) Blast chiller/freezer 30/25kg, 6xGN1/1 or 600x400mm (18 levels pitch 20mm), for tower execution - USB

Short Form Specification

Item No.

For 6 GN1/1 or 600x400 mm trays. Up to 9 ice cream basins 5kg (mm 165x360x125h). 18 levels, pitch 20mm. Load capacity: chilling 30 kg; freezing 25 kg (UK guidelines). Main components in 304 AISI stainless steel. Internal rounded corners and drain. Built-in refrigeration unit. Cruise cycle for fully automatic blast chilling with food probe. Automatic detection of food probe insertion. Automatic and Manual defrost. Blast chilling real residual time estimation (A.R.T.E.). Turbo cooling function. Specific cycles for ice cream. Evaporator with antirust protection. Digital temperature and time display. HACCP and Service alarms with data logging. Operating air temperature: +90 -41°C. For ambient temperatures up to +43°C. Cyclopentane insulation (HCFC, CFC and HFC free). R404a refrigerant gas (HCFC and CFC free). Suitable for tower configuration.

Main Features

- Suitable for tower installation including stacking kit.
- Blast Freezing cycle: 25 kg from 90°C up to -18°C in less than four hours.
- Blast Chilling cycle: 30 kg from +90°C up to + 3°C in less than 90 minutes.
- Soft Chilling (air temperature -0°C).
- Hard Chilling (air temperature -20°C).
- Shock freezing (low air temperature adjustable up to -41°C).
- Holding at +3 °C for chilling or -22 °C for freezing, automatically activated at the end of each cycle, to save energy and maintain the target temperature (manual activation is also possible).
- Turbo cooling: chiller works continuously at the desired temperature; ideal for continuous production.
- Cruise cycle: the chiller automatically sets the parameters for the quickes and best chilling (it works by probe).
- Two specialized cycles:
  P1 brings down ice-cream temperature to -14°C (measured at the core when probe is inserted). Once set temperature is reached, the temporary maintenance phase automatically begins, holding the -14°C temperature.
  P2 sets temperature to -36°C / -40°C for an indefinite amount of time, maintaining the ventilation active. Temperature is adjustable up to -40°C without interrupting the cycle, allowing ice-cream to be kept longer in the freezer.
- Control unit provides several operating settings (programmable parameters): time/core temperature according to NF and UK regulations, time/air temperature/probe personalized according to national regulations, sterilizing cycle: UV lamps built-in (on request), 3 single sensor or 3-sensor temperature probes (as accessory), ideal for meats, automatic defrosting and manual defrosting.
- 3-sensor core probe as standard and automatic detection of the core probe insertion.
- Probe-driven cycles feature ARTE (Algorithm for Remaining Time Estimation) to make planning the activities easier.
- Control unit provides two large displays to read out: time, core temperature, cycle countdown, alarms, service information.
- Audible alarm starts when the cycle ends or terminates abnormally.
- All information related to the different operating models are recorded: date, time, cycle, core temperature, holding temperature, HACCP accordance.
- Multi-purpose internal structure is suitable for 6 grids GN 1/1 (18 positions available with 20 mm pitch) 6 grids or trays 600 x 400 mm (18 positions availabe with 20 mm pitch) or 9 ice-cream basins of 5 kg each (h 125 x 165 x 360).
- USB connection: to download HACCP data from the blast chiller (time, cavity temperature, alarms, and probe temperature).

APPROVAL:

Electrolux
air-o-chill
Blast Chiller-Freezer 6 1/1 30 kg Tower installation with USB

- Performance guaranteed at ambient temperatures of +43°C.

Construction

- Environmentally friendly: R404a as refrigerant fluid.
- Main components in 304 AISI stainless steel.
- Developed and produced in ISO 9001 and ISO 14001 certified factory.
- Evaporator with antirust protection.
- Motors and fan waterproof protected IP23.
- PC connection on request, gate RS 485.
- Stand alone printer as accessory.
- Inner cell with fully rounded corners.
- High density polyurethane insulation, 60 mm tickness, HCFC free.
- Removable magnetic gasket door with hygienic design.
- Ventilator swinging hinged panel for access to the evaporator for cleaning.
- Automatic heated door frame.
- Thermostatic expansion valve to optimize the cooling unit efficiency.
- Solenoid valve included.
- No water connections required.
- Waste water can be plumbed into drain, but can also be collected in an optional waste container.

Included Accessories

- 1 of 3-sensor probe for blast chiller and blast chiller/freezers PNC 880212
- 1 of Set of 5 stainless steel runners for blast chiller LW 30 and 50kg PNC 880312
- 1 of Tower execution support 6GN oven on 30kg blast chiller and freezer PNC 881049

Optional Accessories

- Worktop for blast chillers and blast chillers/freezers 6x1/1GN lengthwise PNC 880027 ❑
- Kit for HACCP advanced connection for LW and CW blast chiller&freezer PNC 880183 ❑
- 3-sensor probe for blast chiller and blast chiller/freezers PNC 880212 ❑
- 1 single-sensor probe for blast chiller and blast chiller&freezers PNC 880213 ❑
- 2 extra single-sensor probes for blast chiller/freezers PNC 880214 ❑
- Kit of 3 single sensor probes for blast chiller/freezers PNC 880215 ❑
- Pastry rilsan grid for blast chiller, lengthwise (600x400mm) PNC 880294 ❑
- Set of 5 stainless steel runners for blast chiller LW 30 and 50kg PNC 880312 ❑
- Tower execution support 6GN oven on 30kg blast chiller and freezer PNC 881049 ❑
- Plastic coated grid 1/1GN PNC 881061 ❑
- KIT BUZZER FOR BCF LW USB PNC 881143 ❑
- Pair of 1/1GN AISI 304 stainless steel grids PNC 921101 ❑
- Tray rack with wheels for 6x1/1GN ovens and bcf, 65mm pitch (std) PNC 922005 ❑
- Tray rack with wheels for 5x1/1GN ovens and bcf, 80mm pitch PNC 922008 ❑
- Kit HACCP EKIS PNC 922166 ❑

The company reserves the right to make modifications to the products without prior notice. All information correct at time of printing.

2017.11.29

air-o-chill
Blast Chiller-Freezer 6 1/1 30 kg
Tower installation with USB

Front

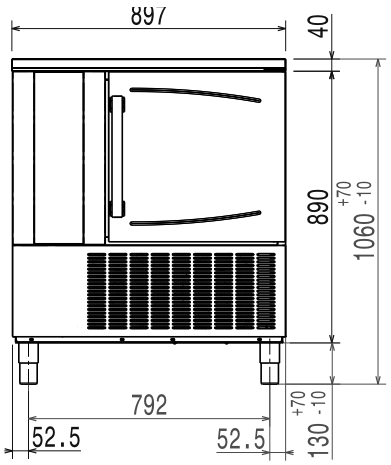

Side

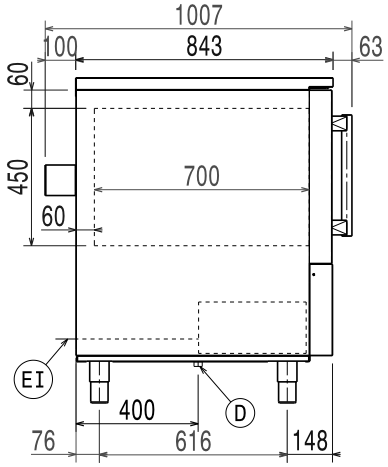

D = Drain
EI = Electrical inlet (power)
RO = Refrigerant Outlet

Top

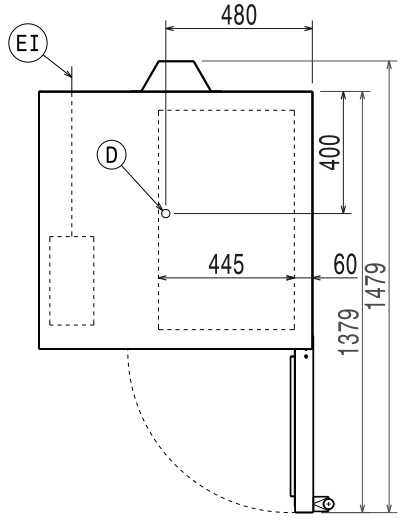

Electric

Supply voltage:	
727665 (AOFPS061CT0)	380-415 V/3N ph/50 Hz
Electrical power max.:	2.39 kW
Defrost Power:	3.19 kW
Circuit breaker required	

Installation:

Clearance:	5 cm on sides and back.

Please see and follow detailed installation instructions provided with the unit

Key Information:

Door hinges:	Right Side
External dimensions, Width:	897 mm
External dimensions, Height:	1020 mm
External dimensions, Depth:	1007 mm
Net weight:	168.3 kg
Shipping weight:	198 kg
Shipping volume:	1.2 m³

Refrigeration Data

Built-in Compressor and Refrigeration Unit	
Refrigerant type:	R404a
Refrigeration power:	1600 W
Refrigeration power at evaporation temperature:	-30 °C
Refrigerant weight:	1800 g

Product Information (Commission Regulation EU 2015/1095)

Energy consumption, cycle (chilling):	0.09 kWh/kg
Chilling Cycle Time (+65°C to +10°C):	76 min
Full load capacity (chilling):	30 kg
Energy consumption, cycle (freezing):	0.271 kWh/kg
Freezing Cycle Time (+65°C to -18°C):	242 min
Full load capacity (freezing):	25 kg

The company reserves the right to make modifications to the products without prior notice. All information correct at time of printing.

2017.11.29