Electrolux

ecostore Premium
2 Half Door Digital Freezer, 670lt (-22/-15)

ITEM #

MODEL #

NAME #

SIS #

AIA #



727256 (ESP72HF) Eco Store Premium Freezer- 670 lt 2 half doors (-22/-15) - 230 V/1N/50Hz

Short Form Specification

Item No.

Two half door freezer entirely constructed in 304 AISI stainless steel with bottom panel in anti-corrosive material. Large digital display featuring cabinet temperature display and setting, manual activation of defrost cycle and turbo frost cycle (to rapidly cool warm loads). HACCP-compliant control with alarms and history. Frost Watch Control to defrost only when required with automatic evaporation of defrost water. Three probes to constantly monitor the working conditions of the appliance. Optiflow: back to front forced air flow and removable air conveyors provides even temperature distribution and fast cooling in any conditions. Fitted with 75 mm-thick cyclopentane insulating foam. On-site reversible door features lock and door microswitch to switch off the fan when the door is opened. Hidden evaporator to guarantee higher storage capacity and less corrosion problems. Built-in refrigeration unit; ventilated operation; Internal LED light. For ambient temperatures up to 43 °C. CFC and HCFC free. R404a gas in refrigeration circuit.
Supplied with n. 4x2/1GN Rilsan coated grids and n. 4 sets of 2 stainless steel grid runners. Prearranged to fit RS485 port to facilitate connection to a remote computer and integrated HACCP systems.

APPROVAL:

Main Features

- Right hinged two 1/2 door with heated frame.
- Large digital white-digit display with cabinet temperature display and setting, manual activation of defrost cycle and turbo frost cycle (to rapidly cool warm loads).
- Freezer model has operating temperatures that can be adjusted from -22 to -15 °C.
- Large storage area suitable to contain 2/1 GN grids or shelves on anti-tilt runners.
- Cabinet fitted with up to 75 mm thickness of cyclopentane insulation for best insulating performance with 100% environmental protection (thermal conductivity: 0,020 W/m*K).
- Automatic evaporation of the defrosting water by hot gas on the top for energy saving.
- Optiflow: back to front forced air flow and removable air conveyors provide even temperature distribution and fast cooling in any conditions.
- Interior LED light to save energy and for best internal visibility.
- Internal structure with numerous charging positions available to host grids, ensuring higher net capacity and a greater storage space.
- 60 mm-thick insulation covering the evaporator can be easily removed with a single operation.
- Removable triple-chamber balloon magnetic gasket to improve insulation and reduce energy consumption and ease of cleaning.
- Frost Watch Control: fully automatic defrost starts only when ice is actually building-up in the evaporator and adapt the defrosting duration to guarantee perfect ice removal while optimizing energy efficiency consumption.
- Fully compliant HACCP digital control: when temperature exceeds critical limits, acoustic and visual alarms are activated. Up to two months of event are kept in memory.
- Prearranged to fit RS485 port to facilitate connection to a remote computer and integrated HACCP systems.
- Rilsan coated grids for improved protection.
- Tropicalized unit (43°C ambient temperature).
- This appliance is intended for use in ambient temperatures up to 40°C.

Construction

- Interior base with rounded corners, pressed from a single sheet.
- Lockable door.
- Refrigerant type: R404a.
- Constructed from the highest quality AISI 304 Stainless steel.
- CFC and HCFC-free insulation.
- Easy access to the main components for maintenance.
- Stainless steel runners and supports easily disassembled.
- The rounded internal corners, the easily removable runners, grids and air conveyors allow for ease of

Electrolux
ecostore Premium
2 Half Door Digital Freezer, 670lt (-22/-15)

cleaning and high hygiene standards.
- Door switch stops the fan when door is opened to avoid cold air exiting the cell, thus saving energy.
- Anti-corrosion bottom avoids any damage that may be caused to the cabinet by aggressive detergents employed to clean the floors.

Included Accessories

• 4 of 2/1GN grey rilsan grid with 2 runners	PNC 881020

Optional Accessories

• 2 stainless steel runners for refrigerated cabinets - (Marine)	PNC 880242 ❑
• Set of 8 GN1/1 PVC containers for fish	PNC 880243 ❑
• Spacer for 670 lt and 1430 lt refrigerated cabinets	PNC 880248 ❑
• Pedal opening for cabinets	PNC 880324 ❑
• 1/1GN plastic container with false bottom	PNC 880705 ❑
• 4 swivelling wheels (2 with brake) for refrigerators, diam 125 mm, NOT for Glass Door and remote models	PNC 881002 ❑
• 2/1GN grey rilsan grid	PNC 881004 ❑
• 2/1GN aisi 304 stainless steel grid	PNC 881016 ❑
• 2/1GN 304 AISI stainless steel grid with 2 runners	PNC 881018 ❑
• Set of 2 stainless steel runners for 670/1430lt refrigerators and freezers	PNC 881021 ❑
• 2/1GN pvc container with lid and 2 runners	PNC 881039 ❑
• 2/1GN perforated shelf	PNC 881042 ❑
• 1/1GN rilsan steel wire basket h=150mm	PNC 881043 ❑
• 2/1GN grey rilsan basket+2 runners h=150mm	PNC 881047 ❑
• Printer for HACCP basic version (for cabinets and counters with digital control)	PNC 881457 ❑

The company reserves the right to make modifications to the products without prior notice. All information correct at time of printing.

ecostore Premium
2 Half Door Digital Freezer, 670lt (-22/-15)

Front

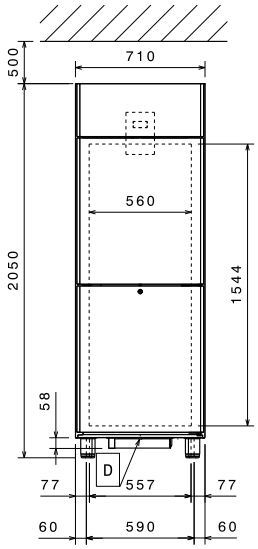

Side

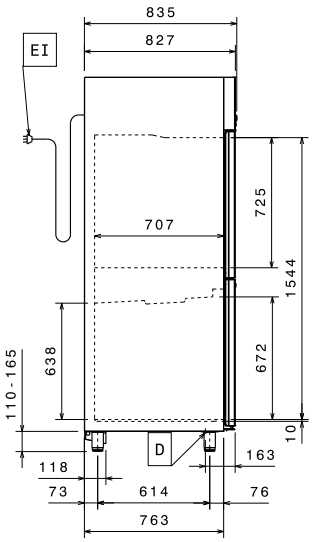

EI = Electrical inlet (power)
RI = Refrigerant Inlet
RO = Refrigerant Outlet

Top

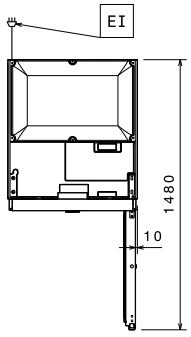

Electric

Supply voltage:	
727256 (ESP72HF)	220-230 V/1 ph/50 Hz
Electrical power max.:	0.54 kW

Key Information:

Gross capacity:	670 lt
Net Volume:	497 lt
Door hinges:	2 Right
External dimensions, Width:	710 mm
External dimensions, Height:	2050 mm
External dimensions, Depth:	835 mm
External dimensions, Depth with Doors Open:	1480 mm
Number and type of doors:	2x1/2 Full
Number and type of grids (included):	4 - GN 2/1
Type of external material:	304 AISI
Type of internal material:	304 AISI
Internal panels material:	304 AISI
Number of positions & pitch:	40; 30 mm

Refrigeration Data

Control type:	Digital
Refrigerant type:	R404a
Refrigeration power:	526 W
Refrigeration power at evaporation temperature:	-30 °C
Refrigerant weight:	240 g
Operating temperature min.:	-15 °C
Operating temperature max.:	-22 °C
Operating mode:	Ventilated

Product Information (EU Regulation 2015/1094)

Energy Class:	D
Yearly energy consumption:	2526kWh/year
Climate class:	Heavy Duty (5)
Energy Efficiency Index (EEI):	64,41

The company reserves the right to make modifications to the products without prior notice. All information correct at time of printing.

2017.11.15

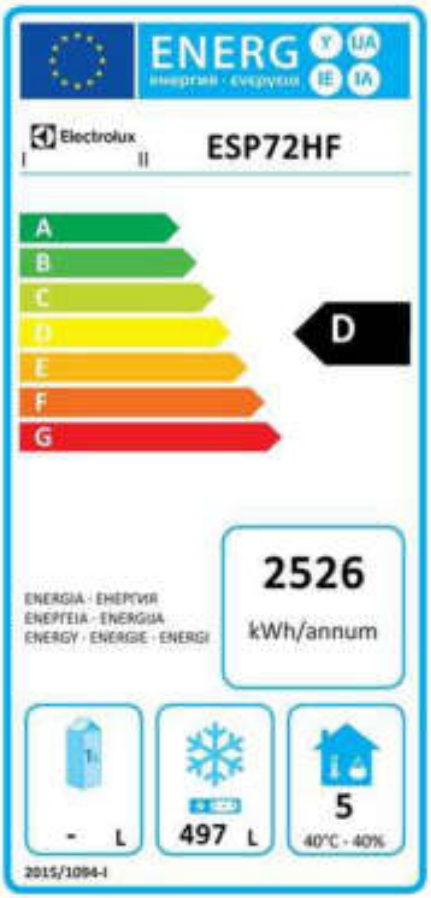

EU energy labelling from 1st July 2016

The European energy labelling scheme for professional refrigerators and freezers is based on requirements setting Minimum Energy Performance standards for commercial refrigeration cabinets sold within the EU. These requirements are designed to drive energy efficiency and environmentally friendly approach for professionals. The European energy labelling scheme will apply to all manufacturers and importers who sell and market products within the EU and it is mandatory across Europe.

Important: all products which consume energy above the minimum level will not be able to be sold within the EU from 1 July 2016.

The company reserves the right to make modifications to the products without prior notice. All information correct at time of printing.