Electrolux

Digital Cabinets
Refrigerated Counter 160 lt - undercounter

ITEM #

MODEL #

NAME #

SIS #

AIA #



727030 (RUCR16X1)	Undercounter Refrigerator 160 lt - 1 door / stainless steel - 230 V/1N/50Hz
727046 (RUCR16W1)	Undercounter Refrigerator 160 lt - 1 door / white - 230 V/1N/50Hz

Short Form Specification

Item No.

The Electrolux range of 160 liter refrigerated counters offers customers a reliable, compact and easy to use cold storage. All the internal finishings are in commercial grade High Impact Polystyrene and all models require only 1 phase 220/240 V supply, allowing to be plugged directly into an existing power socket. Models are designed to operate at an ambient temperature of up to 43°C. The models detailed in this sheet are 160 liter undercounter refrigerators with stainless steel or white painted door.

APPROVAL:

Main Features

- Internal light and lockable door.
- R134a gas in refrigeration circuit.
- Refrigerators models have operating temperatures that can be adjusted from +2 to +10 °C to suit both meat and dairy storage requirements.
- Very quiet operation: noise level less than 45 dB (A).
- Automatic defrost and automatic evaporation of defrost water.
- Shelf runners are thermoformed and are incorporated in the internal structure to be easily cleanable.
- Compact cooling unit easily accesible from the rear of the appliance.
- Model requires only 1 phase 230V supply and can be plugged straight into an existing power socket.
- Temperature display.

Construction

- Interior cell is completely in white High Impact Polystyrene and has no joints to eliminate dirt traps.
- CFC and HCFC-free insulation.
- Refrigerant type: R134a.
- IP23 protection index.
- Developed and produced in ISO 9001 and ISO 14001 certified factory.
- The rounded internal corners, the easily removable grids allow for ease of cleaning and high hygiene standards.
- 30 mm thick insulation with cyclopentane injection for long-term insulation and energy saving.
- Reversible door.
- Built-in refrigeration unit.

Optional Accessories

• Rear wheel kit for 160lt for freestanding refrigerator and freezer	PNC 880143 ❑
• Stacking kit for 160lt undercounter refrigerator, prepainted grey (only for 727030)	PNC 880146 ❑
• Stacking kit for 160lt undercounter white painted refrigerator (only for 727046)	PNC 880148 ❑
• Set of 3 grids for 160lt undercounter refrigerator with glass door, painted white (only for 727046)	PNC 880150 ❑
• Set of 3 grids for 160lt undercounter refrigerator, prepainted grey (only for 727030)	PNC 880151 ❑
• Bottle holder for 3 bottles, 160lt	PNC 880159 ❑

Electrolux
Digital Cabinets
Refrigerated Counter 160 lt - undercounter

Digital Cabinets
Refrigerated Counter 160 lt - undercounter

Front

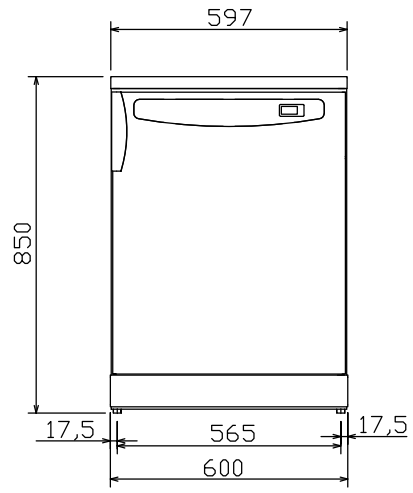

Side

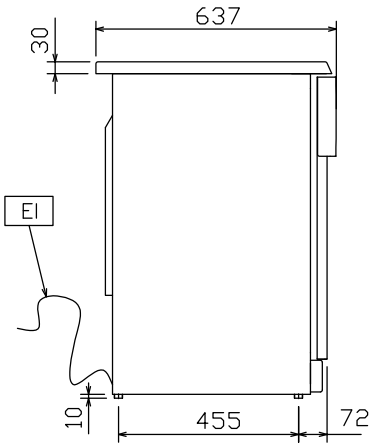

EI = Electrical inlet (power)
RI = Refrigerant Inlet
RO = Refrigerant Outlet

Top

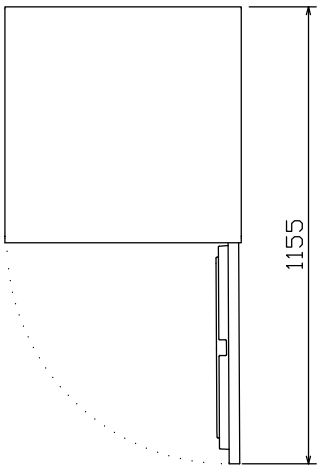

Electric

Supply voltage:	
727030 (RUCR16X1)	220-240 V/1 ph/50 Hz
727046 (RUCR16W1)	220-240 V/1 ph/50 Hz
Electrical power max.:	0.13 kW

Key Information:

Gross capacity:	165 lt
Net Volume:	87 lt
Door hinges:	Right Side
External dimensions, Width:	600 mm
External dimensions, Height:	850 mm
External dimensions, Depth with Doors Open:	
Number and type of doors:	1 Full
Noise level:	47 dBA
Height adjustment:	0/10 mm
Number and type of grids (included):	3 -
External side panels:	
727030 (RUCR16X1)	Prepainted Steel
727046 (RUCR16W1)	Prepainted white
External top panels:	
727030 (RUCR16X1)	Grey ABS
727046 (RUCR16W1)	White ABS
External door material:	
727030 (RUCR16X1)	Stainless Steel
727046 (RUCR16W1)	Prepainted white
Internal panels material:	High Impact White Polystyrene

Built-in Compressor and Refrigeration Unit

Refrigeration Data

Control type:	Mechanical
Compressor power:	5.7 hp
Refrigerant type:	R134a
Refrigeration power:	163 W
Refrigeration power at evaporation temperature:	-12 °C
Refrigerant weight:	65 g
Operating temperature min.:	2 °C
Operating temperature max.:	10 °C
Operating mode:	Ventilated

Product Information (EU Regulation 2015/1094)

Energy Class:	B
Yearly energy consumption:	607kWh/year
Climate class:	Normal duty (cl.4)
Energy Efficiency Index (EEI):	30,18

The company reserves the right to make modifications to the products without prior notice. All information correct at time of printing.

2017.11.15

Electrolux

Digital Cabinets
Refrigerated Counter 160 lt - undercounter

Digital Cabinets
Refrigerated Counter 160 lt - undercounter

The company reserves the right to make modifications to the products without prior notice. All information correct at time of printing.

2017.11.15

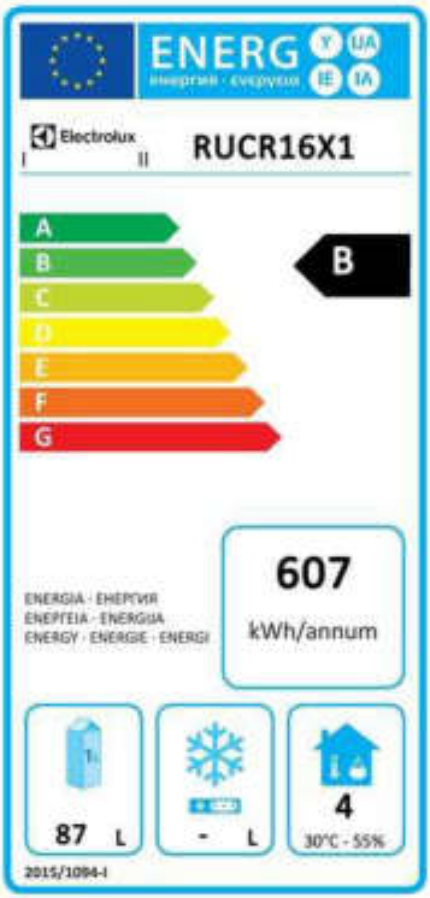

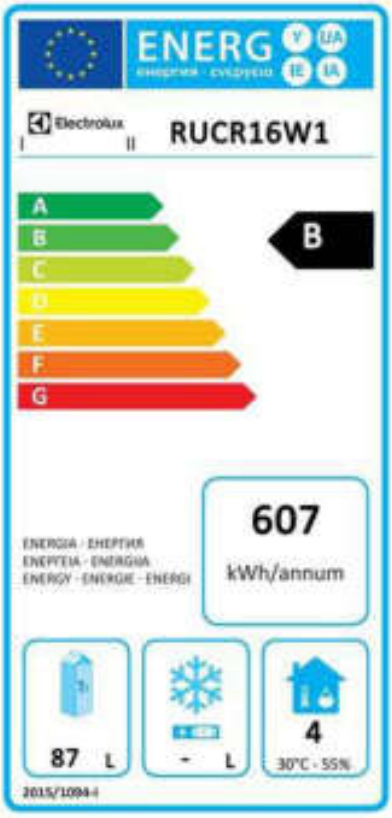

The company reserves the right to make modifications to the products without prior notice. All information correct at time of printing.

EU energy labelling from 1st July 2016

The European energy labelling scheme for professional refrigerators and freezers is based on requirements setting Minimum Energy Performance standards for commercial refrigeration cabinets sold within the EU. These requirements are designed to drive energy efficiency and environmentally friendly approach for professionals. The European energy labelling scheme will apply to all manufacturers and importers who sell and market products within the EU and it is mandatory across Europe.

Important: all products which consume energy above the minimum level will not be able to be sold within the EU from 1 July 2016.

EU energy labelling from 1st July 2016

The European energy labelling scheme for professional refrigerators and freezers is based on requirements setting Minimum Energy Performance standards for commercial refrigeration cabinets sold within the EU. These requirements are designed to drive energy efficiency and environmentally friendly approach for professionals. The European energy labelling scheme will apply to all manufacturers and importers who sell and market products within the EU and it is mandatory across Europe.

Important: all products which consume energy above the minimum level will not be able to be sold within the EU from 1 July 2016.

The company reserves the right to make modifications to the products without prior notice. All information correct at time of printing.