Electrolux

ecostore
2 Glass Door Digital Refrigerator, 1430lt (+2 /+10)

ITEM #

MODEL #

NAME #

SIS #

AIA #



ecostore

2 Glass Door Digital Refrigerator, 1430lt (+2 /+10)

727283 (REX142GR)	Eco Store Refrigerator - 1430 lt 2 Glass Door (+2/+10)- 230 V/1N/50Hz
727425 (REX142GR60)	Eco Store Refrigerator - 1430 lt 2 Glass Door (+2/+10)- 220 V/1N/60Hz

Short Form Specification

Item No.

Two full glass door refrigerator with internal and external structure in 304 AISI stainless steel; external back panel in galvanized steel and bottom panel in anti-corrosive material. Digital control with cabinet temperature display and setting and manual activation of defrost cycle. Fully compliant HACCP digital controls include visible alarms. Optimized back to front forced air flow provides even temperature distribution and fast cooling in any conditions. Fitted with 75 mm-thick cyclopentane insulating foam. Door features lock and door microswitch to switch off the fan when the door is opened. Hidden evaporator to guarantee higher storage capacity and less corrosion problems. Built-in refrigeration unit; ventilated operation; internal back light; automatic defrost and evaporation of defrost water. For ambient temperatures up to 32 °C. CFC and HCFC free. R134a gas in refrigeration circuit.
Supplied with n. 6x2/1GN Rilsan coated grids and n. 6 sets of 2 stainless steel grid runners.

APPROVAL:

Main Features

- Two full glass doors.
- Digital control with cabinet temperature display and setting, manual activation of defrost cycle and internal light switch. Fully compliant HACCP digital controls include visible alarms.
- Large storage area suitable to contain 2/1 GN grids or shelves on anti-tilt runners.
- Optimized back to front forced air flow provide even temperature distribution and fast cooling in any conditions.
- Automatic defrost.
- Internal structure with numerous charging positions available to host grids, ensuring higher net capacity and a greater storage space.
- The operating temperature can be adjusted from +2 to +10°C to suit both meat and dairy storage requirements.
- Performance guaranteed at ambient temperatures of +32°C.
- Cabinet fitted with up to 75 mm thickness of cyclopentane insulation for best insulating performance with 100% environmental protection (thermal conductivity: 0,020 W/m*K).
- Removable triple-chamber balloon magnetic gasket to improve insulation and reduce energy consumption.
- Cleaning-free condenser: the structure of the wire frame condenser prevents dust and grease accumulation thus avoiding periodical cleaning operations and reducing energy consumption.
- Automatic evaporation of the defrosting water by hot gas on the top for energy saving.
- 60 mm-thick insulation covering the evaporator can be easily removed with a single operation.
- Rilsan coated grids for improved protection.
- Hidden evaporator thus guaranteeing higher storage capacity and less corrosion problems.

Construction

- Constructed from the highest quality AISI 304 Stainless steel.
- Interior base with corners, pressed from a single sheet.
- Stainless steel runners and supports easily disassembled.
- Anti-corrosion bottom avoids any damage that may be caused to the cabinet by aggressive detergents employed to clean the floors.
- Easy access to the main components for maintenance.
- Lockable door.
- Door switch stops the fan when door is opened to avoid cold air exiting the cell, thus saving energy.
- Refrigerant type: R134a.
- CFC and HCFC-free insulation.
- Doors are self-closing and can be fully opened up to 180°.
- Mounted on adjustable Stainless steel feet, with castors as an option.

Electrolux

ecostore
2 Glass Door Digital Refrigerator, 1430lt (+2 /+10)

- The rounded internal corners, the easily removable runners and grids allow for ease of cleaning and high hygiene standards.
- Delivered with UK plug. (only for 727425)

The company reserves the right to make modifications to the products without prior notice. All information correct at time of printing.

2016.07.13

Included Accessories

- 6 of 2/1GN grey rilsan grid with 2 runners — PNC 881020

Optional Accessories

- 2 stainless steel runners for refrigerated cabinets - (Marine) — PNC 880242 ❑
- Set of 8 GN1/1 PVC containers for fish (only for 727283) — PNC 880243 ❑
- Spacer for 670 lt and 1430 lt refrigerated cabinets — PNC 880248 ❑
- Kit integrated HACCP for digital refrigerators (IR33) — PNC 880252 ❑
- - NOT TRANSLATED - — PNC 880333 ❑
- 1/1GN plastic container with false bottom — PNC 880705 ❑
- 2/1GN grey rilsan grid — PNC 881004 ❑
- 2/1GN aisi 304 stainless steel grid — PNC 881016 ❑
- 2/1GN 304 AISI stainless steel grid with 2 runners — PNC 881018 ❑
- Meat rail for 670/1430lt refrigerators with 4 hooks — PNC 881019 ❑
- 2/1GN grey rilsan grid with 2 runners — PNC 881020 ❑
- Set of 2 stainless steel runners for 670/1430lt refrigerators and freezers — PNC 881021 ❑
- Pedal opening for 1430lt refrigerator — PNC 881033 ❑
- 2/1GN pvc container with lid and 2 runners — PNC 881039 ❑
- 2/1GN perforated shelf — PNC 881042 ❑
- 1/1GN rilsan steel wire basket h=150mm — PNC 881043 ❑
- 2/1GN grey rilsan basket+2 runners h=150mm — PNC 881047 ❑
- Printer for HACCP basic version (for cabinets and counters with digital control) — PNC 881457 ❑

The company reserves the right to make modifications to the products without prior notice. All information correct at time of printing.

2016.07.13

ecostore
2 Glass Door Digital Refrigerator, 1430lt (+2 /+10)

Front

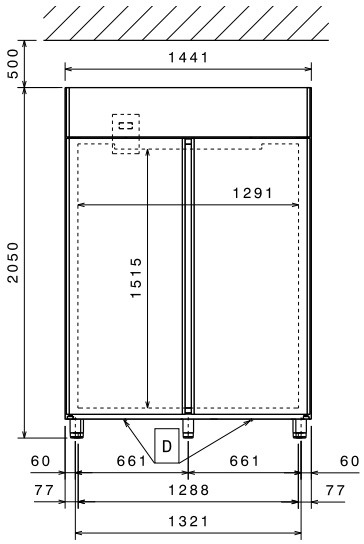

Top

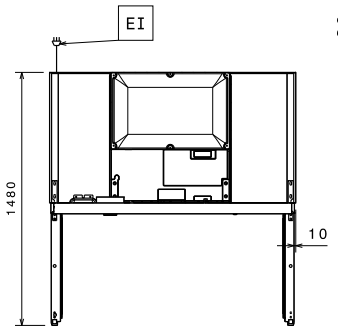

EI = Electrical connection
RI = Refrigerant Inlet
RO = Remote unit connection

Side

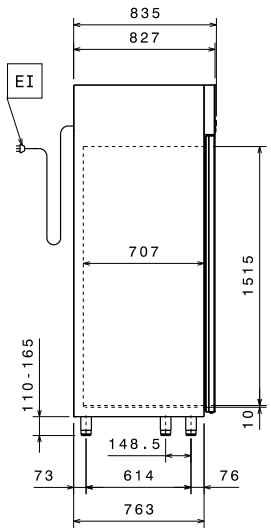

Electric

Supply voltage:	
727283 (REX142GR)	220-230 V/1 ph/50 Hz
727425 (REX142GR60)	220 V/1 ph/60 Hz
Electrical power, max:	
727283 (REX142GR)	0.34 kW
727425 (REX142GR60)	0.328 kW

Key Information:

Gross capacity:	1430 lt
Net Volume:	
727283 (REX142GR)	1037 lt
727425 (REX142GR60)	1025 lt
Door hinges:	1 Left+1 Right
External dimensions, Height:	2050 mm
External dimensions, Width:	1441 mm
External dimensions, Depth:	835 mm
External dimensions, Depth with Doors Open:	
727283 (REX142GR)	1480 mm
727425 (REX142GR60)	1430 mm
Number and type of doors:	2 Glass
Number and type of grids (included):	6 - GN 2/1
Type of external material:	304 AISI
Type of internal material:	304 AISI
Internal panels material:	304 AISI
Number of positions & pitch:	44; 30 mm

Refrigeration Data

Control type:	Digital
Refrigerant type:	R134a
Refrigeration power:	
727283 (REX142GR)	398 W
727425 (REX142GR60)	417 W
Refrigeration power at evaporation temperature:	-10 °C
Operating temperature min.:	2 °C
Operating temperature max.:	10 °C
Operating mode:	Ventilated

Product Information (EU Regulation 2015/1094)

Energy Class:	
727283 (REX142GR)	g
727425 (REX142GR60)	0
Yearly energy consumption:	
727283 (REX142GR)	2373kWh/year
Climate class:	
727283 (REX142GR)	Normal duty (cl.4)
Energy Efficiency Index (EEI):	
727283 (REX142GR)	102,60
727425 (REX142GR60)	0

The company reserves the right to make modifications to the products without prior notice. All information correct at time of printing.

2016.07.13

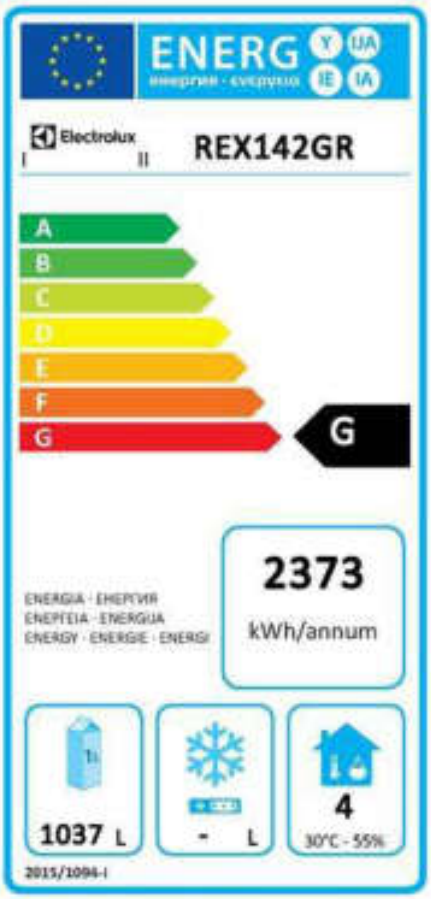

EnergyLabel

The company reserves the right to make modifications to the products without prior notice. All information correct at time of printing.

2016.07.13