Electrolux

ecostore
2 Door Dual Digital Refrigerator, 1430lt (-2/-22)

ITEM #

MODEL #

NAME #

SIS #

AIA #



727290 (REX142FDD) Eco Store Dual Refrigerator -1430 lt 2 doors (-2/-22°C) - 230 V/1N/50Hz

Short Form Specification

Item No.

Two full door refrigerator with internal and external structure in 304 AISI stainless steel; external back panel in galvanized steel and bottom panel in anti-corrosive material. Digital control with cabinet temperature display and setting and manual activation of defrost cycle. Fully compliant HACCP digital controls include visible alarms. Optimized back to front forced air flow provides even temperature distribution and fast cooling in any conditions. Fitted with 75 mm-thick cyclopentane insulating foam. Door features lock and door microswitch to switch off the fan when the door is opened. Hidden evaporator to guarantee higher storage capacity and less corrosion problems. Built-in refrigeration unit; ventilated operation; automatic defrost and evaporation of defrost water. Dual operating temperature: -2/+10° C -15/-22°C. For ambient temperatures up to 43 °C. CFC and HCFC free. R134a and R404a gas in refrigeration circuit.
Supplied with n. 6x2/1GN Rilsan coated grids and n. 6 sets of 2 stainless steel grid runners.

APPROVAL:

Main Features

- Two full doors.
- Digital control with cabinet temperature display and setting and manual activation of defrost cycle. Fully compliant HACCP digital controls include visible alarms.
- Large storage area suitable to contain 2/1 GN grids or shelves on anti-tilt runners.
- Optimized back to front forced air flow provide even temperature distribution and fast cooling in any conditions.
- Automatic defrost.
- Internal structure with numerous charging positions available to host grids, ensuring higher net capacity and a greater storage space.
- Dual temperature type: -2 +10 °C/-15 -22 °C.
- Cabinet fitted with up to 75 mm thickness of cyclopentane insulation for best insulating performance with 100% environmental protection (thermal conductivity: 0,020 W/m*K).
- Removable triple-chamber balloon magnetic gasket to improve insulation and reduce energy consumption and ease of cleaning.
- Automatic evaporation of the defrosting water by hot gas on the top for energy saving.
- 60 mm-thick insulation covering the evaporator can be easily removed with a single operation.
- Rilsan coated grids for improved protection.
- Hidden evaporator thus guaranteeing higher storage capacity and less corrosion problems.
- Tropicalized unit (43°C ambient temperature).
- This appliance is intended for use in ambient temperatures up to 40°C.

Construction

- Constructed from the highest quality AISI 304 Stainless steel.
- Interior base with rounded corners, pressed from a single sheet.
- Stainless steel runners and supports easily disassembled.
- Anti-corrosion bottom avoids any damage that may be caused to the cabinet by aggressive detergents employed to clean the floors.
- Easy access to the main components for maintenance.
- Lockable door.
- Door switch stops the fan when door is opened to avoid cold air exiting the cell, thus saving energy.
- CFC and HCFC-free insulation.
- Mounted on adjustable Stainless steel feet, with castors as an option.
- Doors are self-closing and can be fully opened up to 180°.
- Refrigerant type: R134a and R404a.
- The rounded internal corners, the easily removable runners and grids allow for ease of cleaning and high hygiene standards.

Electrolux

ecostore
2 Door Dual Digital Refrigerator, 1430lt (-2/-22)

Included Accessories

• 6 of 2/1GN grey rilsan grid with 2 runners	PNC 881020

Optional Accessories

• 2 stainless steel runners for refrigerated cabinets - (Marine)	PNC 880242 ❑
• Set of 8 GN1/1 PVC containers for fish	PNC 880243 ❑
• Spacer for 670 lt and 1430 lt refrigerated cabinets	PNC 880248 ❑
• Kit integrated HACCP for digital refrigerators (IR33)	PNC 880252 ❑
• Kit 20 pair runners and trays to fit pastry trays (400x600mm)	PNC 880333 ❑
• Kit of 6 swivelling wheels, 2 with brake, diam 50 mm	PNC 880340 ❑
• 1/1GN plastic container with false bottom	PNC 880705 ❑
• 4 swivelling wheels (2 with brake) for refrigerators, diam 125 mm, NOT for Glass Door and remote models	PNC 881002 ❑
• 2/1GN grey rilsan grid	PNC 881004 ❑
• 2/1GN aisi 304 stainless steel grid	PNC 881016 ❑
• 2/1GN 304 AISI stainless steel grid with 2 runners	PNC 881018 ❑
• 2/1GN grey rilsan grid with 2 runners	PNC 881020 ❑
• Set of 2 stainless steel runners for 670/1430lt refrigerators and freezers	PNC 881021 ❑
• Pedal opening for 1430lt refrigerator	PNC 881033 ❑
• 2/1GN pvc container with lid and 2 runners	PNC 881039 ❑
• 2/1GN perforated shelf	PNC 881042 ❑
• 1/1GN rilsan steel wire basket h=150mm	PNC 881043 ❑
• 3 grey rilsan central grids for 1430lt (not for glass door)	PNC 881044 ❑
• 2/1GN grey rilsan basket+2 runners h=150mm	PNC 881047 ❑
• Printer for HACCP basic version (for cabinets and counters with digital control)	PNC 881457 ❑

The company reserves the right to make modifications to the products without prior notice. All information correct at time of printing.

ecostore
2 Door Dual Digital Refrigerator, 1430lt (-2/-22)

Front

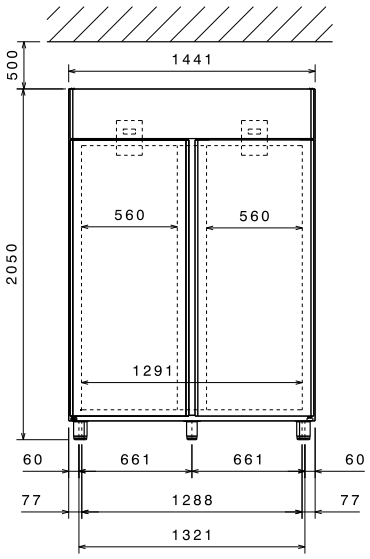

Side

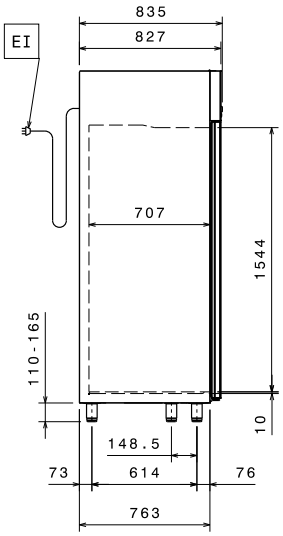

EI = Electrical inlet (power)
RI = Refrigerant Inlet
RO = Refrigerant Outlet

Top

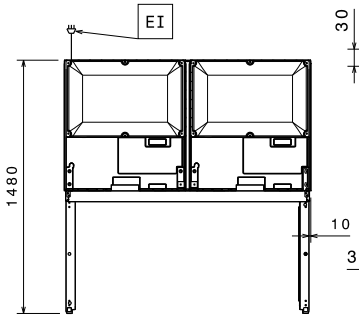

Electric

Supply voltage:	
727290 (REX142FDD)	220-230 V/1 ph/50 Hz
Electrical power max.:	0.865 kW

Key Information:

Gross capacity:	1430 lt
Net Volume:	
Door hinges:	1 Left+1 Right
External dimensions, Width:	1441 mm
External dimensions, Height:	2050 mm
External dimensions, Depth:	835 mm
External dimensions, Depth with Doors Open:	1480 mm
Number and type of doors:	2 Full
Number and type of grids (included):	6 - GN 2/1
Type of external material:	304 AISI
Type of internal material:	304 AISI
Internal panels material:	304 AISI
Number of positions & pitch:	44; 30 mm

Refrigeration Data

Control type:	Digital
Refrigerant type:	R134a
Second Unit - Refrigerant Type:	R404a
Refrigeration power at evaporation temperature:	-10 °C
Operating temperature - First Unit (min-max):	-2°C / 10°C
Operating temperature - Second Unit (min-max):	-15°C / -22°C
Operating mode:	Ventilated

Product Information (EU Regulation 2015/1094)

Energy Class:	
Yearly energy consumption:	
Climate class:	
Energy Efficiency Index (EEI):	

The company reserves the right to make modifications to the products without prior notice. All information correct at time of printing.

2017.11.15