Electrolux

Digital Undercounter Concept Counter Refrigerator - 265 lt, 2 Compartments - 2 Door

ITEM #

MODEL #

NAME #

SIS #

AIA #



Digital Undercounter

Concept Counter Refrigerator - 265 lt, 2 Compartments - 2 Door

728086 (HB2P) 2-door refrigerated counter, -2+10°C, AISI 304

Short Form Specification

Item No.

The Electrolux range of refrigerated tables combines the convenience of worktop space with cold storage located below. This versatility allows remarkable savings in space while offering a functional and modular solution to any kitchen requirement. The range comprises of counters with a number of compartments, with built-in or remote compressor units, in various door or drawer configurations. The model detailed in this sheet has two compartments, two full doors and operates over the temperature range of 28 °F to 50 °F (-2 °C to 10 °C).

APPROVAL:

Main Features

- Adjustable temperature range from -2 °C to +10 °C to suit meat, fish and dairy storage requirements.
- Refrigerated compartment designed to accept GN 1/1 containers.
- Combination of doors and drawers to suit varying needs, with the possibility to change the configuration on site.
- Digital control panel.
- Forced air circulation for rapid cooling and an even temperature distribution.
- CFC and HCFC free (ecological refrigerant type: R404a, gas in foam: cyclopenthane).
- Tropicalized unit (43°C ambient temperature).
- This appliance is intended for use in ambient temperatures up to 40°C.

Construction

- Built-in compressor to suit operating conditions.
- Constructed from AISI 304 Stainless steel throughout to meet the highest hygiene standards.
- Rounded internal corners for ease of cleaning.
- Mounted on Stainless steel adjustable legs to give 150 mm clearance for ease of cleaning.
- Access to all components from the front.
- Developed and produced in ISO 9001 and ISO 14001 certified factory.
- Pre-arranged for drain-pipe.

Included Accessories

• 2 of 1/1GN grey rilsan grid	PNC 881435

Optional Accessories

• Wheels kit	PNC 880025 ❑
• Reversibility door kit	PNC 880046 ❑
• 3x⅓ drawer kit for refrigerated counters	PNC 880115 ❑
• 2x½ drawer kit for refrigerated counters	PNC 880118 ❑
• 1/3+2/3-bottle drawer kit for refrigerated counters	PNC 880126 ❑
• Lock kit for refrigerated counters	PNC 880130 ❑
• Kit 2 stainless steel grids GN1/1 for refrigerated counters	PNC 880139 ❑
• Stainless steel internal structure to support 6 grids (right and left)	PNC 880140 ❑
• Kit integrated HACCP for digital refrigerators (IR33)	PNC 880252 ❑
• Kit 4 feet for Benefit and Concept refrigerated counters	PNC 880334 ❑

Electrolux

Digital Undercounter Concept Counter Refrigerator - 265 lt, 2 Compartments - 2 Door

- Kit reversible door for standard benefit counters PNC 880341 ❑
- Printer for HACCP basic version (for cabinets and counters with digital control) PNC 881457 ❑

The company reserves the right to make modifications to the products without prior notice. All information correct at time of printing.

Digital Undercounter Concept Counter Refrigerator - 265 lt, 2 Compartments - 2 Door

Front

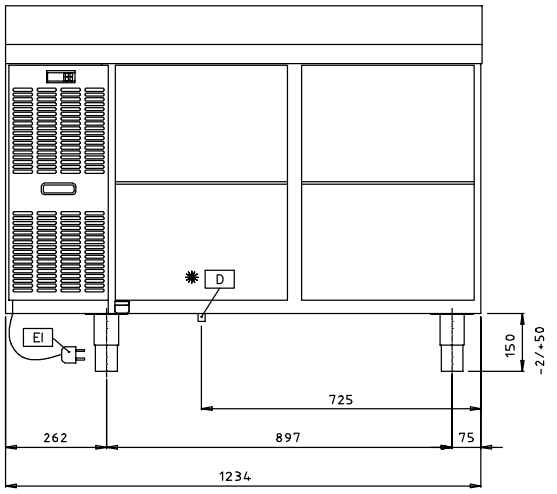

Top

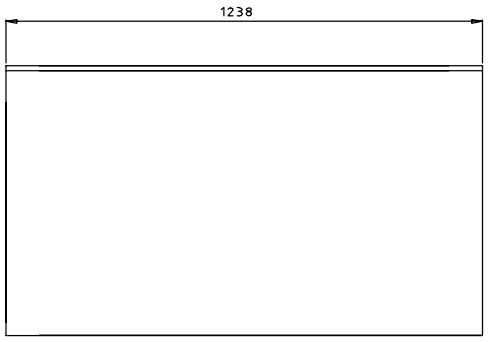

EI = Electrical inlet (power)

Side

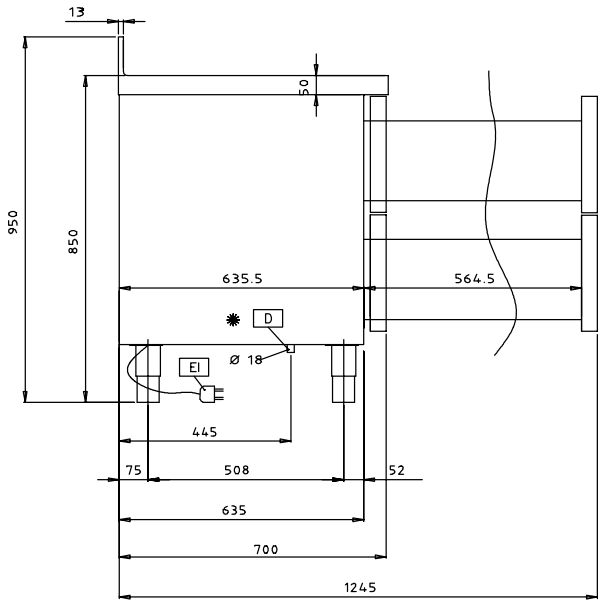

Electric

Supply voltage:	
728086 (HB2P)	230 V/1N ph/50 Hz

Key Information:

Gross capacity:	265 lt
Net Volume:	165 lt
Door hinges:	1 Left+1 Right
Built-in Compressor and Refrigeration Unit	
External dimensions, Height:	850 mm
External dimensions, Width:	1238 mm
External dimensions, Depth:	700 mm
Number and type of doors:	2
Depth with doors open:	1102 mm
Number and type of grids (included):	2 - GN 1/1

Refrigeration Data

Compressor power:	1/3 hp
Refrigerant type:	R404a
Refrigeration power:	448 W
Refrigerant weight:	130 g

Product Information (EU Regulation 2015/1094)

Energy Class:	C
Yearly energy consumption:	803kWh/year
Climate class:	Heavy Duty (5)
Energy Efficiency Index (EEI):	36,30

The company reserves the right to make modifications to the products without prior notice. All information correct at time of printing.

2016.07.19

Digital Undercounter
Concept Counter Refrigerator - 265 lt, 2 Compartments - 2 Door

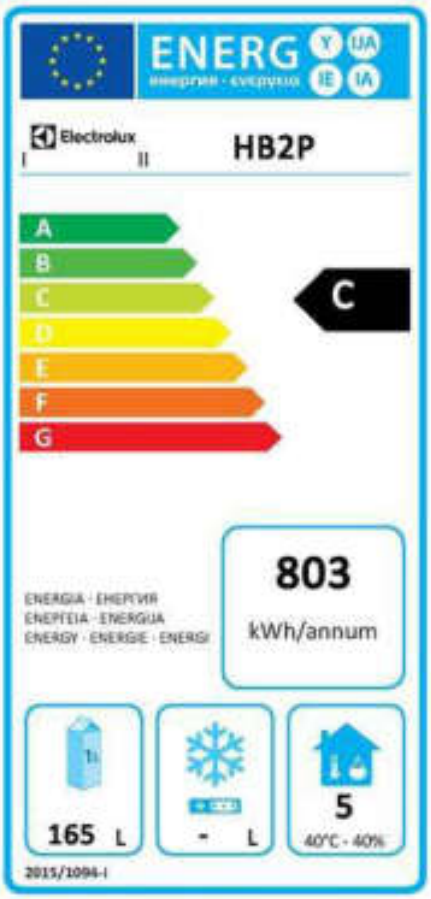

EU energy labelling from 1st July 2016

The European energy labelling scheme for professional refrigerators and freezers is based on requirements setting Minimum Energy Performance standards for commercial refrigeration cabinets sold within the EU. These requirements are designed to drive energy efficiency and environmentally friendly approach for professionals. The European energy labelling scheme will apply to all manufacturers and importers who sell and market products within the EU and it is mandatory across Europe.

Important: all products which consume energy above the minimum level will not be able to be sold within the EU from 1 July 2016.

The company reserves the right to make modifications to the products without prior notice. All information correct at time of printing.