ZANUSSI
PROFESSIONAL

Modular Cooking Range Line
EVO900 4 Zone Electric Induction Cooking Top

ITEM #

MODEL #

NAME #

SIS #

AIA #



Modular Cooking Range Line

EVO900 4 Zone Electric Induction Cooking Top

392043 (Z9INEH4000)	4-zone (5 kW each) electric induction cooking top

Short Form Specification

Item No.

Glass ceramic cooking surface with 4 independently controlled 5 kW induction zones. Induction top surface with seamless transition between individual heating zones. Body and work top of unit entirely in stainless steel with Scotch Brite finish. Extra strength work top in heavy duty 2 mm stainless steel. Right-angled side edges to allow flush-fitting junction between units.

Main Features

- Glass ceramic cooking surface with 4 independently controlled induction zones with a power of 5 kW per zone.
- Almost the entire surface of the ceramic plate can be used without "dead" spots.
- One indicating lamp for each zone located on control console.
- Induction plates endowed with overheating safety device.
- Power to the individual zones can be set with progressive output i.e. fine regulation at the lower and larger progress at the upper levels.
- Low heat dissipation to the kitchen.
- The smooth, glass ceramic plate is not directly heated, so there is no burning on cooking surface.
- IPX5 water protection.

Construction

- Unit is 930 mm deep to give a larger working surface area.
- All exterior panels in Stainless Steel with Scotch Brite finishing.
- AISI 304 stainless steel worktop, 2mm thick.
- Model has right-angled side edges to allow flush fitting joints between units, eliminating gaps and possible dirt traps.

APPROVAL:

ZANUSSI PROFESSIONAL
Modular Cooking Range Line
EVO900 4 Zone Electric Induction Cooking Top

Optional Accessories

- Junction sealing kit PNC 206086 ❑
- 4 wheels, 2 swivelling with brake (EVO700/900). It is mandatory to install with base supports for feet/wheels. PNC 206135 ❑
- Support for bridge type installation, 800 mm PNC 206137 ❑
- Support for bridge type installation, 1000 mm PNC 206138 ❑
- Support for bridge type installation, 1200 mm PNC 206139 ❑
- Support for bridge type installation, 1400 mm PNC 206140 ❑
- Support for bridge type installation, 1600 mm PNC 206141 ❑
- Side handrail for right/left hand PNC 206165 ❑
- Frontal handrail 400 mm PNC 206166 ❑
- Frontal handrail 800 mm PNC 206167 ❑
- Large handrail (portioning shelf) 400 mm PNC 206185 ❑
- Large handrail (portioning shelf) 800 mm PNC 206186 ❑
- Frontal handrail 1200 mm PNC 206191 ❑
- Frontal handrail 1600 mm PNC 206192 ❑
- Water column with swivel arm (water column extension not included) PNC 206289 ❑
- Water column extension PNC 206290 ❑
- Chimney upstand, 800 mm PNC 206304 ❑
- 2 side covering panels, height 250 mm, depth 900 mm PNC 206321 ❑
- Base support for feet or wheels - 800mm (EVO700/900) PNC 206367 ❑
- Stainless steel universal frying pan with stainless steel handle (diam. 200 mm) suitable for induction and all other heating sources PNC 653596 ❑
- Universal frying pan with stainless steel handle (diam. 240 mm) suitable for induction and all other heating sources PNC 653597 ❑
- Universal frying pan with stainless steel handle (diam. 280 mm) suitable for induction and all other heating sources PNC 653598 ❑

The company reserves the right to make modifications to the products without prior notice. All information correct at time of printing.

ZANUSSI PROFESSIONAL

Modular Cooking Range Line
EVO900 4 Zone Electric Induction Cooking Top

Front

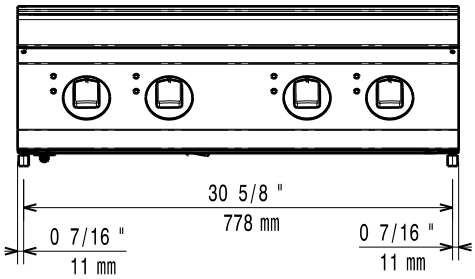

Top

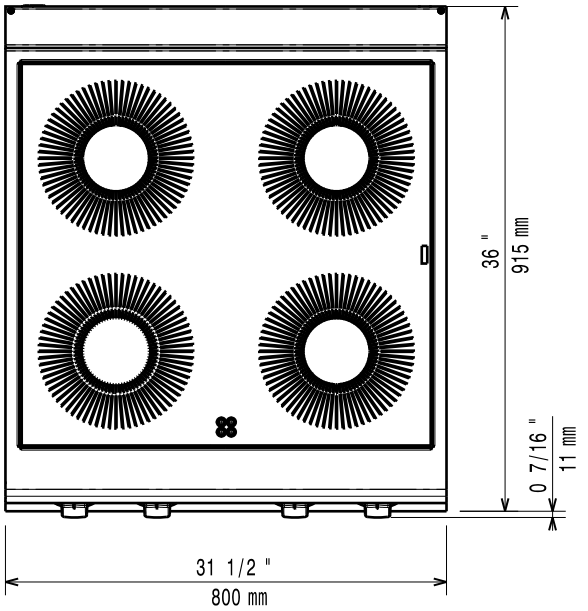

⊟ = Electrical connection

Side

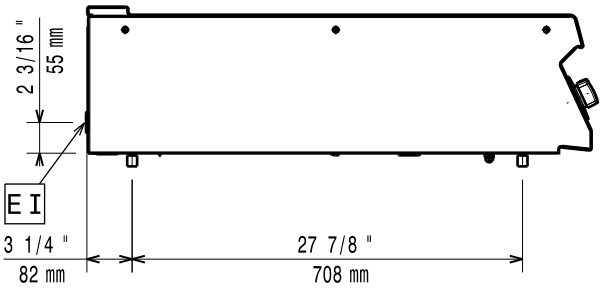

Electric

Supply voltage:	
392043 (Z9INEH4000)	400 V/3 ph/50/60 Hz
Total Watts:	20 kW

Key Information:

Induction Top Dimensions (width):	800 mm
Induction Top Dimensions (depth):	900 mm
Net weight:	75 kg
Shipping weight:	80 kg
Shipping height:	540 mm
Shipping width:	1020 mm
Shipping depth:	860 mm
Shipping volume:	0.5 m³

Induction compatible pots & pans must be used.

If appliance is set up or next to or against temperature sensitive furniture or similar, a safety gap of approximately 150 mm should be maintained or some form of heat insulation fitted.

The company reserves the right to make modifications to the products without prior notice. All information correct at time of printing.

2014.07.14