Electrolux

Modular Cooking Range Line 900XP 4 Zone Electric Induction Cooking Top

ITEM #

MODEL #

NAME #

SIS #

AIA #



Modular Cooking Range Line

900XP 4 Zone Electric Induction Cooking Top

391278 (E9INEH4008) 4-zone (5 kW each) electric induction cooking top

Short Form Specification

Item No.

Glass ceramic cooking surface with 4 independently controlled 5 kW induction zones. Induction top surface with seamless transition between individual heating zones. Body and work top of unit entirely in stainless steel with Scotch Brite finish. Extra strength work top in heavy duty 2 mm stainless steel. Right-angled side edges to allow flush-fitting junction between units.

Main Features

- Glass ceramic cooking surface with 4 independently controlled induction zones with a power of 5 kW per zone.
- Almost the entire surface of the ceramic plate can be used without "dead" spots.
- One indicating lamp for each zone located on control console.
- Induction plates endowed with overheating safety device.
- Power to the individual zones can be set with progressive output i.e. fine regulation at the lower and larger progress at the upper levels.
- Low heat dissipation to the kitchen.
- The smooth, glass ceramic plate is not directly heated, so there is no burning on cooking surface.
- IPX5 water protection.

Construction

- Unit is 930 mm deep to give a larger working surface area.
- All exterior panels in Stainless Steel with Scotch Brite finishing.
- AISI 304 stainless steel worktop, 2mm thick.
- Model has right-angled side edges to allow flush fitting joints between units, eliminating gaps and possible dirt traps.

APPROVAL:

Electrolux
Modular Cooking Range Line
900XP 4 Zone Electric Induction Cooking Top

Optional Accessories

• Junction sealing kit	PNC 206086 ❑
• Kit 4 wheels - 2 swivelling with brake - it is mandatory to install base support and wheels	PNC 206135 ❑
• Support for bridge type installation, 800mm	PNC 206137 ❑
• Support for bridge type installation, 1000mm	PNC 206138 ❑
• Support for bridge type installation, 1200mm	PNC 206139 ❑
• Support for bridge type installation, 1400mm	PNC 206140 ❑
• Support for bridge type installation, 1600mm	PNC 206141 ❑
• Water column with swivel arm (water column extension not included)	PNC 206289 ❑
• Water column extension for 900 line	PNC 206290 ❑
• Chimney upstand, 800mm	PNC 206304 ❑
• Base support for feet or wheels - 800mm (700/900)	PNC 206367 ❑
• Side handrail-right/left hand (900XP)	PNC 216044 ❑
• Frontal handrail, 800mm	PNC 216047 ❑
• Frontal handrail, 1200mm	PNC 216049 ❑
• Frontal handrail, 1600mm	PNC 216050 ❑
• Large handrail - portioning shelf, 400mm	PNC 216185 ❑
• Large handrail - portioning shelf, 800mm	PNC 216186 ❑
• 2 side covering panels for top appliances	PNC 216278 ❑
• Stainless steel universal frying pan with stainless steel handle (diam. 200mm) suitable for induction and all other heating sources	PNC 653596 ❑
• Universal frying pan with stainless steel handle (diam. 240mm) suitable for induction and all other heating sources	PNC 653597 ❑
• Universal frying pan with stainless steel handle (diam. 280mm) suitable for induction and all other heating sources	PNC 653598 ❑

The company reserves the right to make modifications to the products without prior notice. All information correct at time of printing.

2016.03.30

Modular Cooking Range Line 900XP 4 Zone Electric Induction Cooking Top

Front

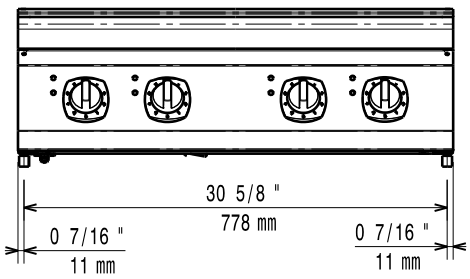

Top

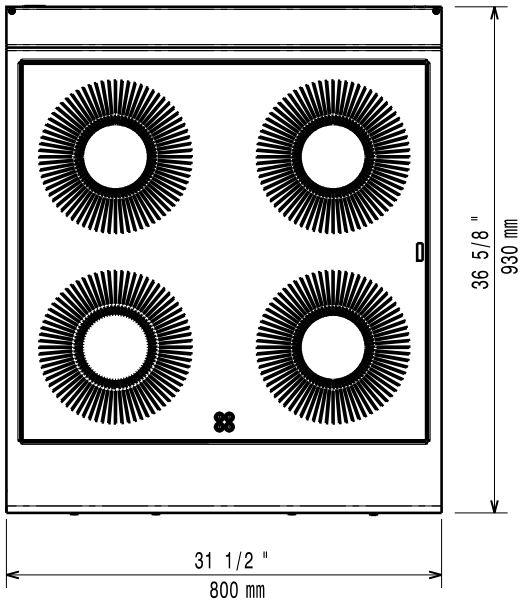

EI = Electrical connection
EQ = Equipotential screw

Side

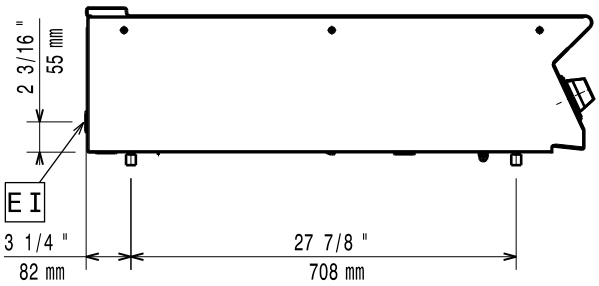

Electric

Supply voltage:	
391278 (E9INEH4008)	400 V/3N ph/50/60 Hz
Total Watts:	20 kW

Key Information:

Induction Top Dimensions (width):	800 mm
Induction Top Dimensions (depth):	930 mm
Net weight:	75 kg
Shipping weight:	85 kg
Shipping height:	540 mm
Shipping width:	1020 mm
Shipping depth:	900 mm
Shipping volume:	0.5 m³

Induction compatible pots & pans must be used.

If appliance is set up or next to or against temperature sensitive furniture or similar, a safety gap of approximately 150 mm should be maintained or some form of heat insulation fitted.

The company reserves the right to make modifications to the products without prior notice. All information correct at time of printing.

2016.03.30