ITEM #

MODEL #

NAME #

SIS #

AIA #

Modular Cooking Range Line
EVO700 4 Zone Electric Infrared Cooking Top Range



Modular Cooking Range Line

EVO700 4 Zone Electric Infrared Cooking Top Range

372025 (Z7IREH4000)	4-zone (2,2 kW each) infrared cooking top
372134 (Z7IREH400N)	4-zone (2,2 kW each) infrared cooking top

Short Form Specification

Item No.

Ceramic glass top cooking surface 6 mm thick, lying flush to the stainless steel frame for smooth pan movement and easier cleaning. Completely sealed infrared cooking top surface to prevent liquid infiltration. Exterior panels in stainless steel with Scotch Brite finish. One piece pressed work top in 1.5 mm thick stainless steel. Right-angled side edges to allow flush-fitting junction between units.

Main Features

- Ceramic glass top cooking surface with 4 infrared heating zones 6 mm thick.
- The circular concentric heating sections measuring 230 mm give uniform heat also to the largest pan.
- The cooking top is sealed to prevent infiltration inside the unit.
- Warning light to indicate residual surface heat.
- Immediate heat transfer from cooking top to pan.
- Low heat dissipation to the kitchen.
- Energy regulation of each zone.
- Heating via ultra high powered heating elements.
- The smooth glass-ceramic surface can be quickly and easily cleaned, thus providing maximum hygiene.
- IPX 4 water protection.

Construction

- All exterior panels in Stainless Steel with Scotch Brite finishing.
- One piece pressed 1.5 mm work top in Stainless steel.
- Model has right-angled side edges to allow flush fitting joints between units, eliminating gaps and possible dirt traps.

Optional Accessories

• 4 wheels, 2 swivelling with brake (EVO700/900). It is mandatory to install with base supports for feet/wheels.	PNC 206135 ❑
• Support for bridge type installation, 800 mm	PNC 206137 ❑
• Support for bridge type installation, 1000 mm	PNC 206138 ❑
• Support for bridge type installation, 1200 mm	PNC 206139 ❑
• Support for bridge type installation, 1400 mm	PNC 206140 ❑
• Support for bridge type installation, 1600 mm	PNC 206141 ❑
• Frontal handrail 400 mm	PNC 206166 ❑
• Frontal handrail 800 mm	PNC 206167 ❑
• Large handrail (portioning shelf) 400 mm	PNC 206185 ❑
• Large handrail (portioning shelf) 800 mm	PNC 206186 ❑
• Frontal handrail 1200 mm	PNC 206191 ❑
• Frontal handrail 1600 mm	PNC 206192 ❑
• Right and left side handrails	PNC 206240 ❑
• Water column with swivel arm (water column extension not included)	PNC 206289 ❑
• Water column extension	PNC 206291 ❑
• Chimney upstand, 800 mm	PNC 206304 ❑
• 2 side covering panels, height 250 mm, depth 700 mm	PNC 206320 ❑
• Base support for feet or wheels - 800mm (EVO700/900)	PNC 206367 ❑
• Chimney grid net, 400mm	PNC 206400 ❑

APPROVAL:

Zanussi Professional
www.zanussiprofessional.com
zanussiprofessional@electrolux.com

Modular Cooking Range Line
EVO700 4 Zone Electric Infrared Cooking Top Range

Modular Cooking Range Line
EVO700 4 Zone Electric Infrared Cooking Top Range

Front

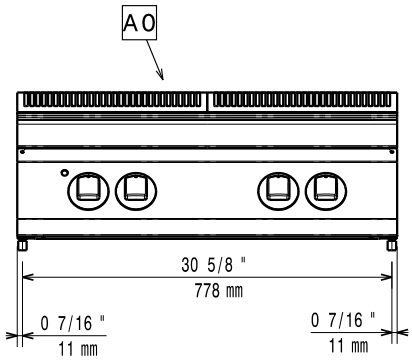

Top

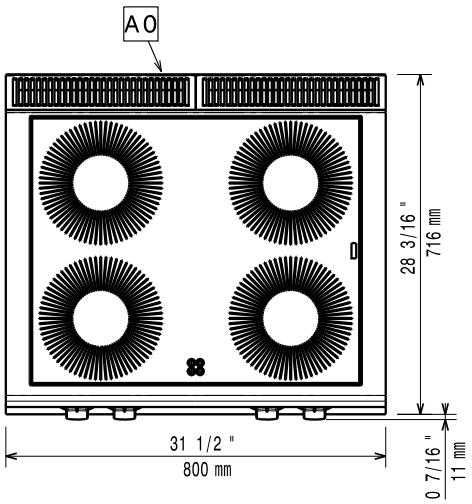

EI = Electrical connection
EQ = Equipotential screw

Side

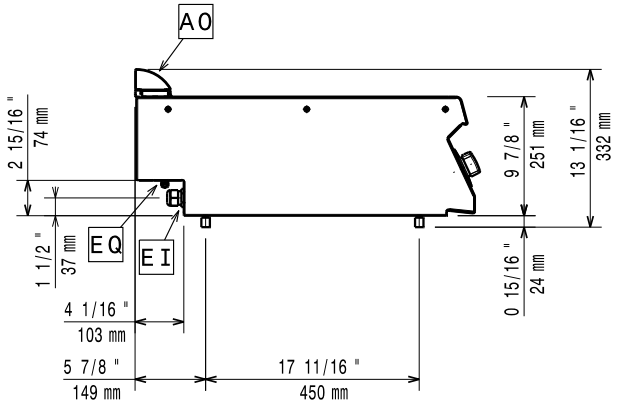

Electric

Supply voltage:	
372025 (Z7IREH4000)	400 V/3N ph/50/60 Hz
372134 (Z7IREH400N)	230 V/3 ph/50/60 Hz
Total Watts:	8.8 kW

Key Information:

Front Plates Power:	2.2 - 2.2 kW
Back Plates Power:	2.2 - 2.2 kW
Front Plates dimensions:	Ø 230 Ø 230
Back Plates dimensions:	Ø 230 Ø 230
Net weight:	35 kg
Shipping weight:	50 kg
Shipping height:	540 mm
Shipping width:	
372025 (Z7IREH4000)	820 mm
372134 (Z7IREH400N)	830 mm
Shipping depth:	
372025 (Z7IREH4000)	860 mm
372134 (Z7IREH400N)	850 mm
Shipping volume:	0.38 m³

If appliance is set up or next to or against temperature sensitive furniture or similar, a safety gap of approximately 150 mm should be maintained or some form of heat insulation fitted.

The company reserves the right to make modifications to the products without prior notice. All information correct at time of printing.

2016.08.05