Electrolux

Modular Cooking Range Line thermaline 90 - 2 Zone Freestanding Electric Solid Top with Ecotop, 1 Side, H=800

ITEM #

MODEL #

NAME #

SIS #

AIA #



Modular Cooking Range Line

thermaline 90 - 2 Zone Freestanding Electric Solid Top with Ecotop, 1 Side, H=800

589523 (MCLBFAEDAO)	Electric solid top, 2 zones, ecotop coating, one-side operated

Short Form Specification

Item No.

Unit constructed according to DIN 18860_2 with 20 mm drop nose top and 70 mm recessed plinth. Internal frame for heavy duty sturdiness in 2 mm and 3 mm in 1.4301 (AISI 304). 2 mm top in 1.4301 (AISI 304). Flat surface construction, easily cleanable. THERMODUL connection system enables seamless worktop when units are connected and avoids soil penetrating. ECOTOP model with a 14 mm thick mild steel cooking surface with heat retaining coating. 2 independently controlled heating zones with 2 electronic sensors per zone for temperature surface control and 8 power levels. Rapid plate heat up, continuously ready to use. Overheat protection switches off the supply in case of overheating. Standby function saves energy and quickly recovers maximum power. Metal knobs with embedded hygienic silicon "soft" grip enable easier handling and cleaning.
IPX5 water resistance certification.
Configuration: Freestanding, One-side operated.

Main Features

- 2 heating zones independently controlled.
- Rapid heat up of the plate and continuously ready for use.
- Overheat protection: a temperature sensor switches off the supply in case of overheating.
- Pans can easily be moved from one area to another without lifting.
- Wide rounded cleaning zone around the plates for easier cleaning.
- IPX5 water resistance certification.
- All major components may be easily accessed from the front.
- ECOTOP model has a 14mm thick mild steel cooking surface with heat retaining coating.
- THERMODUL connection system creates a seamless work top when units are connected to each other thus avoiding soil penetrating vital components and facilitating the removal of units in case of replacement or service.
- Metal knobs with embedded hygienic silicon "soft" grip for easier handling and cleaning. The special design of the controls prevent infiltration of liquids or soil into vital components.
- Large visible digital display manufactured in tempered glass to resist heat and chemicals, showing temperatures or power settings. The display also shows on/off status of the appliance and on/off status of the heating elements.
- Standby function for energy saving and fast recovery of maximum power.
- Cooking plate and base joint profile guarantee against soil infiltration.
- Two electronic sensors per zone to control surface temperature and to protect cooking plate from overheating.
- 8 power levels.

Construction

- 2 mm top in 1.4301 (AISI 304).
- Unit constructed according to DIN 18860_2 with 20 mm drop nose top and 70 mm recessed plinth.
- Flat surface construction with minimal hidden areas to easily clean all surfaces
- Internal frame for heavy duty sturdiness in 2 mm and 3 mm in 1.4301 (AISI 304).

APPROVAL:

Electrolux Professional
professional.electrolux.com
foodservice@electrolux.com

Electrolux
Modular Cooking Range Line
thermaline 90 - 2 Zone Freestanding Electric Solid Top with Ecotop, 1 Side, H=800

Optional Accessories

- Connecting rail kit, 900mm PNC 912502 ❑
- Stainless steel side panel, 900x800mm, freestanding PNC 912511 ❑
- Portioning shelf, 500mm width PNC 912523 ❑
- Portioning shelf, 500mm width PNC 912553 ❑
- Folding shelf, 300x900mm PNC 912581 ❑
- Folding shelf, 400x900mm PNC 912582 ❑
- Fixed side shelf, 200x900mm PNC 912589 ❑
- Fixed side shelf, 300x900mm PNC 912590 ❑
- Fixed side shelf, 400x900mm PNC 912591 ❑
- Stainless steel front kicking strip, 500mm width PNC 912595 ❑
- Stainless steel side kicking strips left and right, freestanding, 900mm width PNC 912621 ❑
- Stainless steel side kicking strips left and right, back-to-back, 1810mm width PNC 912627 ❑
- Stainless steel plinth, freestanding, 500mm width PNC 912917 ❑
- Connecting rail kit: modular 90 (on the left) to ProThermetic tilting (on the right), ProThermetic stationary (on the left) to ProThermetic tilting (on the right) PNC 912975 ❑
- Connecting rail kit: modular 80 (on the right) to ProThermetic tilting (on the left), ProThermetic stationary (on the right) to ProThermetic tilting (on the left) PNC 912976 ❑
- Stainless steel side panel, 900x800mm, flush-fitting, freestanding PNC 913088 ❑
- Endrail kit, flush-fitting, left PNC 913111 ❑
- Endrail kit, flush-fitting, right PNC 913112 ❑
- Back panel, 500x550mm, for bases and units, one-side operated PNC 913179 ❑
- Endrail kit (12.5mm) for thermaline 90 units, left PNC 913202 ❑
- Endrail kit (12.5mm) for thermaline 90 units, right PNC 913203 ❑
- Stainless steel side panel, left, H=800, flush PNC 913220 ❑
- Stainless steel side panel, left, H=800, flush PNC 913221 ❑
- Stainless steel side panel, left, H=800, flush PNC 913224 ❑
- Stainless steel side panel, left, H=800, flush PNC 913225 ❑
- T-connection rail for back-to-back installations without backsplash PNC 913227 ❑
- - NOT TRANSLATED - PNC 913232 ❑
- Perforated shelf for warming cabinets and cupboard bases (one-side operated TL80-85-90 and two-side operated for TL80) PNC 913233 ❑
- Energy optimizer kit 14A - factory fitted PNC 913244 ❑
- Endrail kit, (12.5mm), for back-to-back installation, left PNC 913251 ❑
- Endrail kit, (12.5mm), for back-to-back installation, right PNC 913252 ❑
- Endrail kit, flush-fitting, for back-to-back installation, left PNC 913255 ❑
- Endrail kit, flush-fitting, for back-to-back installation, right PNC 913256 ❑
- Side reinforced panel only in combination with side shelf, for freestanding units PNC 913259 ❑
- Side reinforced panel only in combination with side shelf, for back-to-back installations, left PNC 913277 ❑
- Side reinforced panel only in combination with side shelf, for back-to-back installation, right PNC 913278 ❑
- Shelf fixation for TL80-85-90 one-side operated, TL80 two-side operated PNC 913279 ❑

The company reserves the right to make modifications to the products without prior notice. All information correct at time of printing.

Modular Cooking Range Line
thermaline 90 - 2 Zone Freestanding Electric Solid Top with Ecotop, 1 Side, H=800

Front

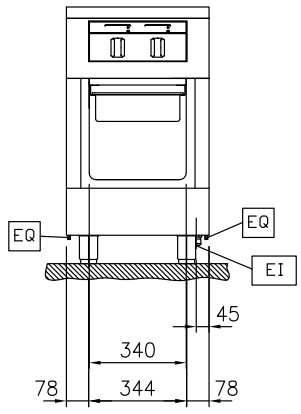

Top

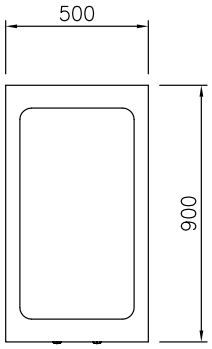

EI = Electrical connection
EQ = Equipotential screw

Side

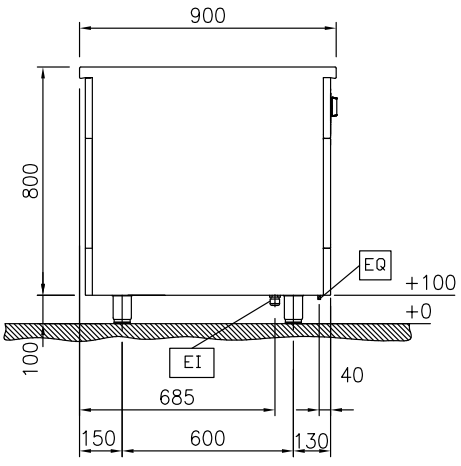

Electric

Supply voltage:	
589523 (MCLBFAEDAO)	400 V/3N ph/50/60 Hz
Electrical power, max:	6 kW

Key Information:

Configuration:	On Base;One-Side Operated
Front Plates Power:	3 - 0 kW
Back Plates Power:	3 - kW
Solid top usable surface (width):	360 mm
Solid top usable surface (depth):	730 mm
External dimensions, Height:	800 mm
External dimensions, Width:	500 mm
External dimensions, Depth:	900 mm
Storage Cavity Dimensions (width):	340 mm
Storage Cavity Dimensions (height):	330 mm
Storage Cavity Dimensions (depth):	740 mm
Net weight:	98 kg

The company reserves the right to make modifications to the products without prior notice. All information correct at time of printing.

2017.02.08