ITEM #

MODEL #

NAME #

SIS #

AIA #

EasySteamPlus Touchline Electric Combi Oven 20GN 1/1



EasySteamPlus

Touchline Electric Combi Oven 20GN 1/1

237204 (FCZ201ETA)	Electric Combi Touchline Oven 20 1/1 – 400V/3ph/50-60Hz
237224 (FCZ201ETN)	Electric Combi Touchline Oven 20 1/1 – 230V/3ph/50-60Hz

Short Form Specification

Item No.

Convection-steamer with a high resolution touch screen control panel (translated in 30 languages) and with dedicated steam generator guarantees a continuous supply of fresh steam at all times. Real humidity control based upon Lambda sensor for consistent results independent from the food load. Any excess humidity generated by the food is exhausted with the hot air cycles. Cooking evenness guaranteed: fresh air is blown into the oven from the outside, after it is pre-heated it is pulled through the bi-functional fan, thus maintaining the evenness of the cooking process. Manual injection of water to add additional moisture in the cell. Built-in automatic cleaning system with four automatic pre-set cycles.
Economizer cleaning functions can be set to save energy (skip drying function), water (reduce water consumption) and rinse aid (skip rinse aid). Three cooking modes: Manual (cooking cycle, temperature, time and advance features); Automatic - (select family and food type + 3 special cycles-LTC, proofing, regeneration); Programs (recipe selection from page with 1000 free 16-phase programs and search button). Recipes can be saved in a USB key for replication in other ovens. Automatic pre-heating and pre-cooling. Half power, half speed and pulse ventilation (Hold) controls. Food probe with 6 temperature sensors (the lowest one drives the cycle). Double-glass door with book-like opening maintains a cool external temperature and incorporates a drip pan to collect excess condensation avoiding wet floors. Halogen lighting in the cooking chamber. Side, back panels and interior in AISI 304 stainless steel.
Supplied with n.1 tray rack 1/1GN, 63mm pitch.

Main Features

- Automatic mode: choosing family and food type, the oven automatically selects the appropriate cooking climate, temperature and time. A maximum of 60 personalised presets per family can be saved. Three special automatic cycles available:
  - Low Temperature Cooking cycle (LTC) to minimize weight loss, maximizing food quality for large pieces of meat.
  - Reheating cycle: efficient humidity management to quickly reheat.
  - Proofing cycle: uses the air-o-clima function to create the perfect proofing conditions.
- Manual mode: traditional cooking style by manually selecting the parameters. Traditional cooking cycles available:
  - Dry, hot convection cycle (max. 300 °C): ideal for low humidity cooking.
  - Low temperature Steam cycle (max. 100 °C): ideal for sous-vide (vacuum packed) re-thermalization and delicate cooking.
  - Steam cycle (100 °C): seafood and vegetables.
  - High temperature steam (max. 130 °C).
  - Combination cycle (max. 250 °C): combining convected heat and steam to obtain humidity controlled cooking environment, accelerating the cooking process and reducing weight loss.
- Guided descaling function to guide operator during boiler descaling phase (from "Setting" mode).
- MultiTimer function to manage a sequence of up to 14 different cooking cycles, improving flexibility and ensuring excellent cooking results. Can be saved up to 70 multitimers programs.
- Humidity control with Lambda sensor: controls and displays the exact (single degree of accuracy) amount of humidity contained in the hot air which circulates in the oven atmosphere during the combi and regeneration cycles. The Lambda sensor measures physically the real humidity level inside the cooking cell and acts consequently according to the set value. With hot air cycles, it also manages to exhaust the excess humidity generated from the food.
- Automatic cleaning system: 4 different pre-set cycles to clean the cooking cell, according to the actual requirements. The cleaning system is built-in (no need for add-ons).
- Perfect eveness: blows fresh air from the outside through the bi-functional fan, which pushes the air that has been preheated in the meantime, into the cooking chamber, guaranteeing the evenness of the cooking process.
- Programs mode: a maximum of 1000 recipes can be stored in the oven's memory, to recreate the exact same recipe at any time. The recipes can be group in 16 different categories to better organize the menu. 16-step cooking programs also available.
- 6-point multi sensor core temperature probe for maximum precision and food safety.
- Fan speeds: full, half speed for delicate pulse cooking

APPROVAL:

such as for baking cakes and pulse ventilation for baking and low temperature cooking. The "pulse utility" is also perfect for keeping food warm at the end of the cooking cycle.
- Reduced power cycle.
- USB connection: to download HACCP and FSC data, upload the recipes and interface setting.
- Food safe control monitors the cooking process to comply with HACCP standards. HACCP management to record cooking procedure available upon request.
- Sous-vide USB probe to ensure excellent cooking results even with vacuum-packed products (optional accessory).
- Make-it-mine feature to allow user to personalize all user main interfaces in the "Setting" mode and block editing and deleting of stored programs.
- Supplied with n.1 trolley rack 1/1GN, 63mm pitch and door shield.

Construction

- IPX 5 spray water protection certification for easy cleaning.
- 304 AISI stainless steel construction throughout.
- Seamless hygienic cooking chamber with all rounded corners for easy cleaning.
- Double thermo-glazed door with open frame construction, for cool outside door panel. Swing hinged easy-release inner glass on door for easy cleaning.
- Swing hinged front panel for easy service access to main components.

Included Accessories

- 1 of Trolley with tray rack for 20x1/1 GN ovens and bcf, 63mm pitch — PNC 922007
- 1 of Control panel filter for 20xGN1/1 ovens (already included) — PNC 922248

Optional Accessories

- Water softener with cartridge STEAM 1200 (only for 237204) — PNC 920003 ❑
- Automatic water softener — PNC 921305 ❑
- Resin sanitizer for water softener — PNC 921306 ❑
- Trolley with tray rack for 20x1/1 GN ovens and bcf, 63mm pitch — PNC 922007 ❑
- Trolley with tray rack for 16x1/1 GN ovens and bcf, 80mm pitch — PNC 922010 ❑
- Thermal blanket for 20x1/1GN — PNC 922014 ❑
- Banquet rack for 54 plates for 20x1/1 GN ovens and bcf, 74mm pitch — PNC 922016 ❑
- Pair of 1/1 GN AISI 304 grids — PNC 922017 ❑
- Couple of grids GN 1/1 for whole chicken (8 per grid) — PNC 922036 ❑
- Pastry trolley, for 20x1/1GN ovens and bcf, 80mm pitch (16 runners). Allows use of 400x600mm pastry trays — PNC 922068 ❑
- Banquet rack 45 plates for 20x1/1GN oven, 90mm pitch — PNC 922072 ❑
- Grid GN 1/1 for 4 whole chickens (1,2 kg each) — PNC 922086 ❑
- Door shield for pre-heating oven, without trolley, 20x1/1 GN — PNC 922094 ❑
- Side external water spray unit (needs to be mounted outside and includes support for mounting to oven) — PNC 922171 ❑
- 2 fat filters for 20 1/1 and 2/1 GN combi steamers (gas and electric) and convection ovens (electric) — PNC 922179 ❑
- Baking tray with 5 rows (baguette), perforated aluminium with silicon coating (400x600x38) — PNC 922189 ❑
- Baking tray with 4 edges, perforated aluminium (400x600x20) — PNC 922190 ❑
- Baking tray with 4 edges, aluminium (400x600x20) — PNC 922191 ❑
- Basket for detergent tank - wall mounted — PNC 922209 ❑
- 2 frying baskets for ovens — PNC 922239 ❑
- Heat shield for 20x1/1 GN oven — PNC 922243 ❑
- Control panel filter for 20xGN1/1 ovens (already included) — PNC 922248 ❑
- Retractable spray unit for 20x1/1 and 2/1 ovens — PNC 922263 ❑
- Grid GN 1/1 for 8 whole chickens (1,2 kg each) — PNC 922266 ❑
- Kit integrated Haccp for ovens — PNC 922275 ❑
- Adjustable wheels for 20GN 1/1 and 20GN 2/1 lengthwise ovens — PNC 922280 ❑
- USB probe for Sous-Vide cooking - available on EasySteamPlus and EasyPlusT ovens with software versions after 4.10 — PNC 922281 ❑
- Potato baker GN 1/1 for 28 potatoes — PNC 922300 ❑
- Fat collection tray 100 mm — PNC 922321 ❑
- 4 long skewers — PNC 922327 ❑
- Fat collection tray 40 mm (only for 237224) — PNC 922329 ❑
- Smoker for lengthwise and crosswise ovens - 4 kinds of smoker wood chips are available on request — PNC 922338 ❑
- Water filter for ovens - 4 membranes for 10 2/1, 20 1/1, 20 2/1 ovens — PNC 922344 ❑
- External reverse osmosis filter for ovens - 4 membranes — PNC 922345 ❑
- Kit check valve — PNC 922347 ❑
- Multipurpose hook — PNC 922348 ❑
- Flat baking tray with 2 edges, GN 1/1 — PNC 925006 ❑

The company reserves the right to make modifications to the products without prior notice. All information correct at time of printing.

2016.10.20

EasySteamPlus
Touchline Electric Combi Oven
20GN 1/1

Front

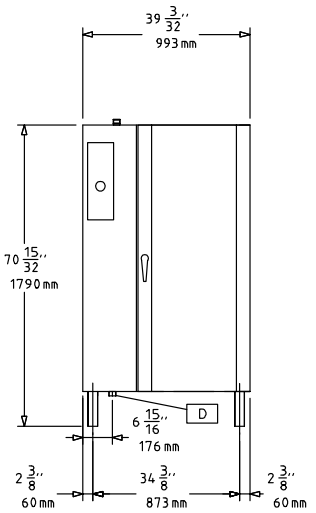

Top

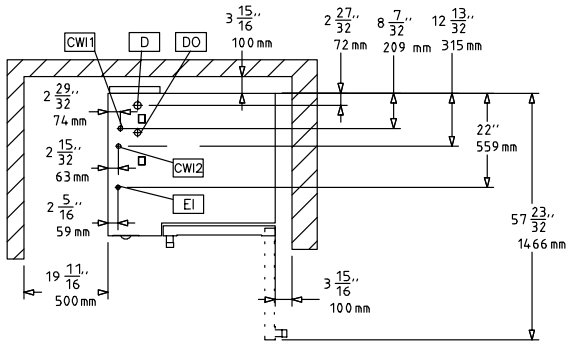

CWI1 = Cold Water inlet 1

CWI2 = Cold Water Inlet 2

D = Drain

DO = Overflow drain pipe

EI = Electrical connection

Side

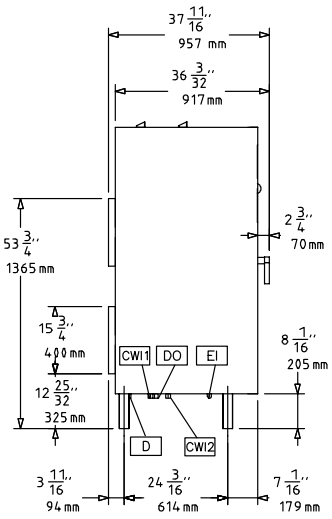

Electric

Supply voltage:	
237204 (FCZ201ETA)	400 V/3N ph/50/60 Hz
237224 (FCZ201ETN)	230 V/3 ph/50/60 Hz
Electrical power max.:	34.5 kW
Circuit breaker required	

Water:

Water inlet "CW" connection:	3/4"
Total hardness:	5-50 ppm
Pressure, bar min/max:	1-2.5 bar
Drain "D":	1"1/4
Water cold/hot pipe size	3/4"

Electrolux *recommends the use of treated water, based on testing of specific water conditions.*

Please refer to user manual for detailed water quality information.

Installation:

Clearance:	5 cm rear and right hand sides.
Suggested clearance for service access:	50 cm left hand side.

Capacity:

GN:	20 - 1/1 Gastronorm
Max load capacity:	100 kg

Key Information:

External dimensions, Height:	1795 mm
External dimensions, Width:	993 mm
External dimensions, Depth:	957 mm
Net weight:	284 kg
Shipping weight:	309 kg
Shipping volume:	2.18 m³

The company reserves the right to make modifications to the products without prior notice. All information correct at time of printing.

2016.10.20