ITEM #

MODEL #

NAME #

SIS #

AIA #

EasySteam class B Electric Combi Oven 20GN 1/1



EasySteam

class B Electric Combi Oven 20GN 1/1

238204 (FCZ201EBA2)	EasySteam, electric, 20x1/1GN, automatic cleaning function, B
238224 (FCZ201EBN2)	EasySteam, electric, 20x1/1GN, automatic cleaning function, B

Short Form Specification

Item No.

Convection-steamer with dedicated steam generator guarantees a continuous supply of fresh steam at all times.
Cooking evenness guaranteed: fresh air is blown into the oven from the outside, after it is pre-heated it is pulled through the bi-functional fan, thus maintaining the evenness of the cooking process.
Humidity controlled through By-pass technology that guarantees the efficient use of the steam generator thus reducing water and energy consumption. Manual injection of water to add additional moisture in the cell.
Semi-automatic cleaning cycle (steam loosens residual dirt, then steam and detergents act together to dissolve residue and manual rinsing completes the task).
Cooking cycles: steam (100 °C), low temperature steam (25-99 °C), overheated steam (101-130°C), hot air (25-300 °C), combi (25-250 °C), regeneration. 2-step cooking with the possibility to combine different cycles. Half power, half speed and pulse ventilation (Hold) controls. Food probe for precise cooking. Double-glass door with book-like opening maintains a cool external temperature and incorporates a drip pan to collect excess condensation avoiding wet floors. Halogen lighting in the cooking chamber. Side, back panels and interior in AISI 304 stainless steel.
Supplied with n.1 trolley rack 1/1GN, 63mm pitch.

Main Features

- Manual mode: traditional cooking style by manually selecting the parameters. Traditional cooking cycles available:
  - Dry, hot convection cycle (max. 300 °C): ideal for low humidity cooking.
  - Low temperature Steam cycle (max. 100 °C): ideal for sous-vide (vacuum packed) re-thermalization and delicate cooking.
  - Steam cycle (100 °C): seafood and vegetables.
  - High temperature steam (max. 130 °C).
  - Combination cycle (max. 250 °C): combining convected heat and steam to obtain humidity controlled cooking environment, accelerating the cooking process and reducing weight loss.
- Regeneration cycle: best cooking setting for quickly heating the products to be regenerated on plate and tray (max 250°C).
- By-pass technology: controls the humidity degree of the oven atmosphere in combi and regeneration cycles. It prevents water and energy waste.
- Fan speeds: full, half speed for delicate pulse cooking such as for baking cakes and pulse ventilation for baking and low temperature cooking. The "pulse utility" is also perfect for keeping food warm at the end of the cooking cycle.
- Single sensor core temperature probe included.
- Reduced power cycle.
- Supplied with n.1 trolley rack 1/1GN, 63mm pitch and door shield.
- Automatic cleaning system: 4 different pre-set cycles to clean the cooking cell, according to the actual requirements. The cleaning system is built-in (no need for add-ons).
- Perfect eveness: blows fresh air from the outside through the bi-functional fan, which pushes the air that has been preheated in the meantime, into the cooking chamber, guaranteeing the evenness of the cooking process.

Construction

- IPX 5 spray water protection certification for easy cleaning.
- 304 AISI stainless steel construction throughout.
- Seamless hygienic cooking chamber with all rounded corners for easy cleaning.
- Double thermo-glazed door with open frame construction, for cool outside door panel. Swing hinged easy-release inner glass on door for easy cleaning.
- Swing hinged front panel for easy service access to main components.

APPROVAL:

EasySteam class B Electric Combi Oven 20GN 1/1

Included Accessories

- 1 of Trolley with tray rack for 20x1/1 GN ovens and bcf, 63mm pitch — PNC 922007
- 1 of Control panel filter for 20xGN1/1 ovens (already included) — PNC 922248

Optional Accessories

- Water softener with cartridge STEAM 1200 — PNC 920003 ❑
- Automatic water softener — PNC 921305 ❑
- Resin sanitizer for water softener — PNC 921306 ❑
- Trolley with tray rack for 20x1/1 GN ovens and bcf, 63mm pitch — PNC 922007 ❑
- Trolley with tray rack for 16x1/1 GN ovens and bcf, 80mm pitch — PNC 922010 ❑
- Thermal blanket for 20x1/1GN — PNC 922014 ❑
- Banquet rack for 54 plates for 20x1/1 GN ovens and bcf, 74mm pitch — PNC 922016 ❑
- Pair of 1/1 GN AISI 304 grids — PNC 922017 ❑
- Couple of grids GN 1/1 for whole chicken (8 per grid) — PNC 922036 ❑
- Pastry trolley, for 20x1/1GN ovens and bcf, 80mm pitch (16 runners). Allows use of 400x600mm pastry trays — PNC 922068 ❑
- Banquet rack 45 plates for 20x1/1GN oven, 90mm pitch — PNC 922072 ❑
- Grid GN 1/1 for 4 whole chickens (1,2 kg each) — PNC 922086 ❑
- Door shield for pre-heating oven, without trolley, 20x1/1 GN — PNC 922094 ❑
- Side external water spray unit (needs to be mounted outside and includes support for mounting to oven) — PNC 922171 ❑
- 2 fat filters for 20 1/1 and 2/1 GN combi steamers (gas and electric) and convection ovens (electric) — PNC 922179 ❑
- Baking tray with 5 rows (baguette), perforated aluminium with silicon coating (400x600x38) — PNC 922189 ❑
- Baking tray with 4 edges, perforated aluminium (400x600x20) — PNC 922190 ❑
- Baking tray with 4 edges, aluminium (400x600x20) — PNC 922191 ❑
- 2 frying baskets for ovens — PNC 922239 ❑
- Heat shield for 20x1/1 GN oven — PNC 922243 ❑
- Control panel filter for 20xGN1/1 ovens (already included) — PNC 922248 ❑
- Retractable spray unit for 20x1/1 and 2/1 ovens — PNC 922263 ❑
- Grid GN 1/1 for 8 whole chickens (1,2 kg each) — PNC 922266 ❑
- Kit integrated Haccp for ovens — PNC 922275 ❑
- Adjustable wheels for 20GN 1/1 and 20GN 2/1 lengthwise ovens — PNC 922280 ❑
- Potato baker GN 1/1 for 28 potatoes — PNC 922300 ❑
- Fat collection tray 100 mm — PNC 922321 ❑
- 4 long skewers — PNC 922327 ❑
- Fat collection tray 40 mm — PNC 922329 ❑
- Smoker for lengthwise and crosswise ovens - 4 kinds of smoker wood chips are available on request — PNC 922338 ❑
- Water filter for ovens - 4 membranes for 10 2/1, 20 1/1, 20 2/1 ovens — PNC 922344 ❑
- External reverse osmosis filter for ovens - 4 membranes — PNC 922345 ❑
- Kit check valve — PNC 922347 ❑
- Multipurpose hook — PNC 922348 ❑
- Flat baking tray with 2 edges, GN 1/1 — PNC 925006 ❑

The company reserves the right to make modifications to the products without prior notice. All information correct at time of printing.

2016.10.20

EasySteam class B Electric Combi Oven 20GN 1/1

Front

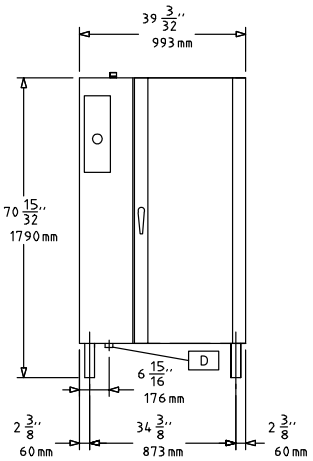

Top

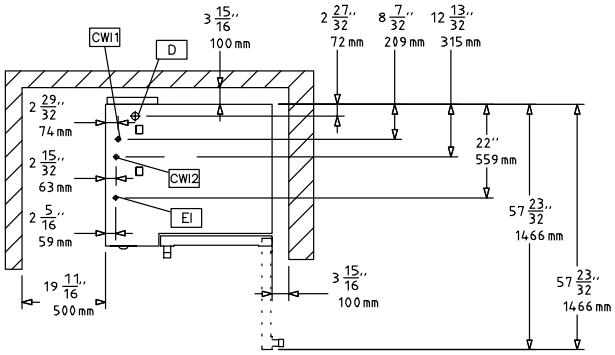

CWI1 = Cold Water inlet 1
CWI2 = Cold Water Inlet 2
D = Drain
EI = Electrical connection

Side

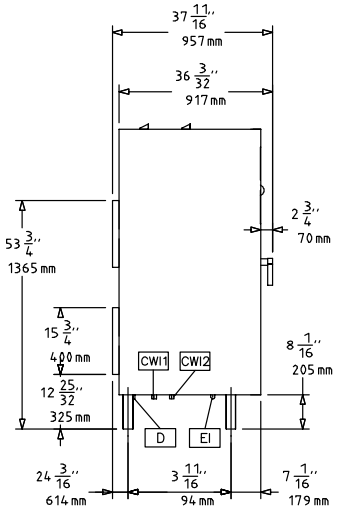

Electric

Supply voltage:	
238204 (FCZ201EBA2)	400 V/3N ph/50/60 Hz
238224 (FCZ201EBN2)	230 V/3 ph/50/60 Hz
Electrical power max.:	34.5 kW
Circuit breaker required	

Water:

Water inlet "CW" connection:	3/4"
Total hardness:	5-50 ppm
Pressure, bar min/max:	1-2.5 bar
Drain "D":	1"1/4

Electrolux recommends the use of treated water, based on testing of specific water conditions.

Please refer to user manual for detailed water quality information.

Installation:

Clearance:	5 cm rear and right hand sides.
Suggested clearance for service access:	50 cm left hand side.

Capacity:

GN:	20 - 1/1 Gastronorm
Max load capacity:	100 kg

Key Information:

External dimensions, Height:	1795 mm
External dimensions, Width:	993 mm
External dimensions, Depth:	957 mm
Net weight:	284 kg
Shipping weight:	
238204 (FCZ201EBA2)	298 kg
238224 (FCZ201EBN2)	309 kg
Shipping volume:	2.18 m³

The company reserves the right to make modifications to the products without prior notice. All information correct at time of printing.

2016.10.20