ITEM #

MODEL #

NAME #

SIS #

AIA #

Smart Steam Ovens
Electric Convection Oven
10GN 1/1



Smart Steam Ovens

Electric Convection Oven 10GN 1/1

240005 (FCF101EZ)	Smart steam electric convection oven 10 GN 1/1

Short Form Specification

Item No.

Convection oven with direct steam. External panelling, door, sides and top in 304 AISI stainless steel. Cooking chamber, grid supports, diffusers and fan walls in 304 AISI stainless steel. Double glass door with double-step opening and drip tray with automatic discharge. Oven chamber with rounded corners and side lighting. Flow Channel ventilation system. Heating via "Incoloy" armoured elements positioned on the convector unit. Electromechanical thermostat; temperature adjustable from 30°C to 300° C.; visual display and thermometer.Timer from 0 to 120 minutes with acoustic alarm. 5-level humidity control. Functional level: base, manual. Single sensor probe. The pan rack (composed by 2 side hangers) can accommodate n. 10x1/1GN grids and can be converted into a roll-in rack by using an optional kit.
Supplied with n. 1 pan rack, 60mm pitch.

Main Features

- Core temperature probe.
- Drip tray to collect residual cooking juices and fat.
- Rapid cooling of oven cavity.
- Flow Channel ventilation system guarantees even cooking of food by optimizing the air flow and the heat diffusion throughout the oven chamber, allowing to cook different foods at the same time without transfer of smell or flavour.
- Main switch/Cooking mode selector which can be used to set: ON/OFF, hot air without humidification and hot air with humidification (choice of 5 different humidity levels).
- Timer to set the cooking time, adjustable up to 120 minutes or for continuous operation with an acoustic alarm to show the cycle has finished. At the end of the set cooking time the heat and the fan are automatically switched off.
- Double step opening to avoid accidental heat release.

Construction

- Cooking chamber, grid supports, diffusers, fan walls and main components, are in 304 AISI stainless steel. The oven chamber has rounded corners and no joints for ease of cleaning.
- Door made from a double tempered glass and gives an excellent view of the cooking load.
- Side lighting system using normal bulbs. Electromechanical thermostat with an operating temperature adjustable from 30°C up to 300°C (for convection cycle).
- 1 pair of 60 mm pitch runners is supplied as standard.

APPROVAL:

Smart Steam Ovens
Electric Convection Oven 10GN 1/1

Included Accessories

- 1 of 60mm pitch side hangers for 10 1/1 GN electric oven — PNC 922121

Optional Accessories

- External manual water softener - 12 lt — PNC 860412 ❑
- Pair of 1/1 GN grids in 304 AISI — PNC 921101 ❑
- Pair of 1/2 GN pan support shelves — PNC 921106 ❑
- Automatic water softener — PNC 921305 ❑
- Resin sanitizer for water softener — PNC 921306 ❑
- 1/1 GN drain pan guide kit — PNC 921713 ❑
- Hot base cupboard on castors for 10 1/1 GN oven — PNC 922023 ❑
- Couple of grids GN 1/1 for whole chicken (8 per grid) — PNC 922036 ❑
- Base for 10 1/1 GN oven — PNC 922102 ❑
- Shelf guides for 10 1/1 GN oven base — PNC 922106 ❑
- Base cupboard for 10 1/1 GN oven — PNC 922109 ❑
- Hot base cupboard for 10 1/1 GN oven — PNC 922112 ❑
- Base on castors for 10 1/1 GN oven — PNC 922114 ❑
- 80mm pitch side hangers for 10 1/1 GN electric oven — PNC 922115 ❑
- 60mm pitch side hangers for 10 1/1 GN electric oven — PNC 922121 ❑
- Feet for 6&10x1/1 GN and 10x2/1 GN ovens — PNC 922127 ❑
- Trolley for 10 1/1 GN roll-in rack — PNC 922130 ❑
- Retractable hose reel water spray unit — PNC 922170 ❑
- Side external water spray unit (needs to be mounted outside and includes support for mounting to oven) — PNC 922171 ❑
- Fat filter for 10 1/1 and 2/1 GN combi steamers (gas and electric) and convection ovens (electric) — PNC 922178 ❑
- Kit to convert to 10 1/1 GN roll-in rack — PNC 922201 ❑
- Grid GN 1/1 for 8 whole chickens (1,2 kg each) — PNC 922266 ❑
- Kit universal skewer rack and 6 short skewers for Lengthwise and Crosswise ovens — PNC 922325 ❑
- Universal skewer rack — PNC 922326 ❑
- Smoker for lengthwise and crosswise ovens - 4 kinds of smoker wood chips are available on request — PNC 922338 ❑

The company reserves the right to make modifications to the products without prior notice. All information correct at time of printing.

2016.10.20

Smart Steam Ovens
Electric Convection Oven 10GN 1/1

Front

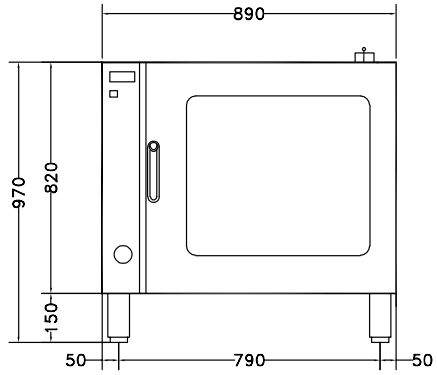

Top

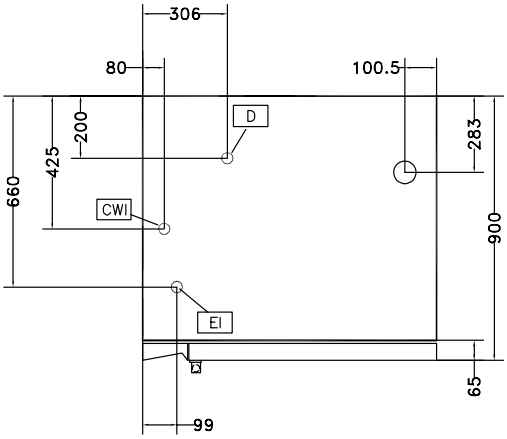

CWI1 = Cold Water inlet 1
CWI2 = Cold Water Inlet 2
D = Drain
EI = Electrical connection

Side

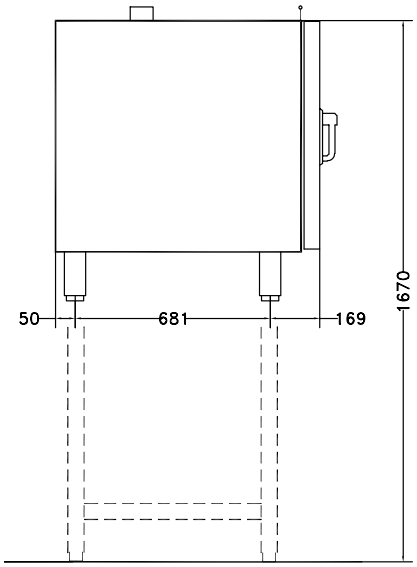

Electric

Supply voltage:	
240005 (FCF101EZ)	400 V/3N ph/50 Hz
Electrical power max.:	17.3 kW
Total Watts:	17.3 kW

Key Information:

External dimensions, Height:	970 mm
External dimensions, Width:	890 mm
External dimensions, Depth:	900 mm
Net weight:	121.2 kg
Number of grids:	10
Number/type of grids:	10 - 1/1 Gastronorm
Type of grids:	1/1 Gastronorm
Runners pitch:	60 mm
Convection:	✗
Meat probe:	✗
Internal dimensions, width:	590 mm
Internal dimensions, depth:	503 mm
Internal dimensions, height:	680 mm

The company reserves the right to make modifications to the products without prior notice. All information correct at time of printing.

2016.10.20