Electrolux

Smart Steam Ovens
Electric Convection Oven 6GN 1/1

ITEM #

MODEL #

NAME #

SIS #

AIA #



Smart Steam Ovens

Electric Convection Oven 6GN 1/1

240003 (FCF6EOEM) Electric convection oven 6 GN 1/1 - Africa

Short Form Specification

Item No.

Convection oven with direct injection. Stainless steel cavity. Double glass door and drip tray to collect residual cooking juices and fat. Cooking chamber with rounded corners for easy cleaning and side lighting . Electromechanical thermostat. Adjustable temperature 30-300° C. Time setting from 0 to 120 minutes with acoustic signal. 5 moisture settings. Core temperature probe with a measuring sensor .
Series Accessories: Oven rack 6 GN 1/1.

Main Features

- Core temperature probe.
- Drip tray to collect residual cooking juices and fat.
- Rapid cooling of oven cavity.
- Flow Channel ventilation system guarantees even cooking of food by optimizing the air flow and the heat diffusion throughout the oven chamber, allowing to cook different foods at the same time without transfer of smell or flavour.
- Main switch/Cooking mode selector which can be used to set: ON/OFF, hot air without humidification and hot air with humidification (choice of 5 different humidity levels).
- Timer to set the cooking time, adjustable up to 120 minutes or for continuous operation with an acoustic alarm to show the cycle has finished. At the end of the set cooking time the heat and the fan are automatically switched off.
- Double step opening to avoid accidental heat release.

Construction

- Door made from a double tempered glass and gives an excellent view of the cooking load.
- Side lighting system using normal bulbs. Electromechanical thermostat with an operating temperature adjustable from 30°C up to 300°C (for convection cycle).
- 1 pair of 60 mm pitch runners is supplied as standard.

APPROVAL:

Electrolux
Smart Steam Ovens
Electric Convection Oven 6GN 1/1

Optional Accessories

- 12lt external manual water softener PNC 860412 ❑
- Pair of 1/1GN AISI 304 stainless steel grids PNC 921101 ❑
- Support for 1/2GN pan (2pcs) PNC 921106 ❑
- Automatic water softener for ovens PNC 921305 ❑
- Resin sanitizer for water softener PNC 921306 ❑
- Guide kit for 1/1GN drain pan PNC 921713 ❑
- Couple of grids for whole chicken 1/1GN (8 per grid) PNC 922036 ❑
- Base for oven 6x1/1GN PNC 922101 ❑
- Shelf guides for 6x1/1GN, ovens base PNC 922105 ❑
- Retractable hose reel spray unit PNC 922170 ❑
- Side external spray unit (needs to be mounted outside and includes support for mounting to oven) PNC 922171 ❑
- Fat filter for 6x1/1GN PNC 922177 ❑
- Grid for whole chicken 1/1GN (8 per grid - 1,2kg each) PNC 922266 ❑
- Kit universal skewer rack and 6 short skewers for Lengthwise and Crosswise ovens PNC 922325 ❑
- Universal skewer rack PNC 922326 ❑
- Smoker for lengthwise and crosswise ovens - 4 kinds of smoker wood chips are available on request PNC 922338 ❑

The company reserves the right to make modifications to the products without prior notice. All information correct at time of printing.

2016.09.30

Smart Steam Ovens
Electric Convection Oven 6GN 1/1

Front

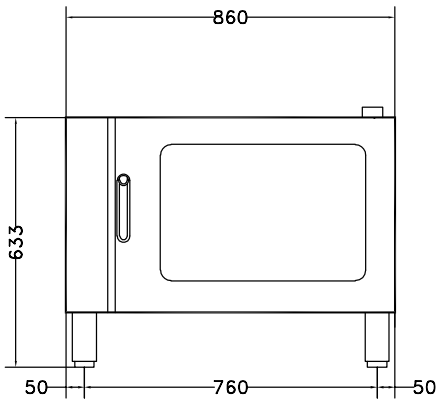

Top

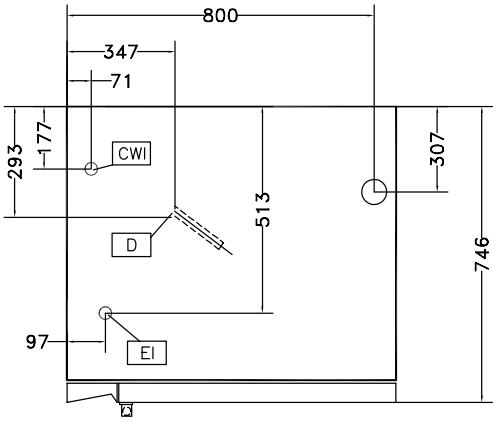

CWI1 = Cold Water inlet 1
CWI2 = Cold Water Inlet 2
D = Drain
EI = Electrical inlet (power)

Side

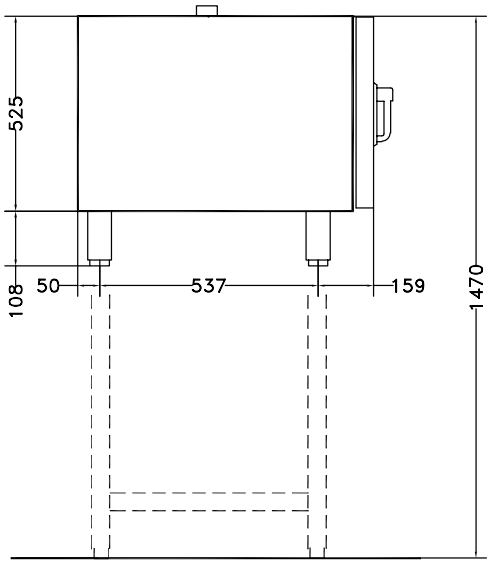

Electric

Supply voltage:	
240003 (FCF6EOEM)	400 V/3N ph/50 Hz
Electrical power max.:	7.7 kW
Total Watts:	7.7 kW

Key Information:

External dimensions, Height:	633 mm
External dimensions, Width:	860 mm
External dimensions, Depth:	746 mm
Net weight:	80.75 kg
Number of grids:	6
Number/type of grids:	6 - 1/1 Gastronorm
Type of grids:	1/1 Gastronorm
Runners pitch:	60 mm
Convection:	✗
Meat probe:	✗
Internal dimensions, width:	560 mm
Internal dimensions, depth:	370 mm
Internal dimensions, height:	380 mm

The company reserves the right to make modifications to the products without prior notice. All information correct at time of printing.

2016.09.30