Convotherm

Combi steamer

Project _____

Item _____

Quantity _____

FCSI section _____

Approval _____

Date _____

C4eT 20.10 GS

Model

Convotherm 4 easyTouch

- easyTouch
- 20 slide rails
- Gas
- Injection/Spritzer
- Right-hinged door



Key features

- ACS+ operating modes: Steam, combi-steam, hot air
- ACS+ extra functions:
  - Crisp&Tasty - 5 moisture-removal settings
  - BakePro - 5 levels of traditional baking
  - HumidityPro - 5 humidity settings
  - Controllable fan - 5 speed settings
- easyTouch 9" full-touch screen
- ConvoClean+ fully automatic cleaning system with eco, regular and express modes - with optional single-dose dispensing
- Ethernet interface (LAN)
- HygienicCare
- USB port integrated in the control panel
- TriColor indicator ring - indicates the current operating status
- Steam generated by injecting water into the cooking chamber
- Right-hinged door

Standard features

- ACS+ (Advanced Closed System +) operating modes:
  - Steam (86-266°F) with guaranteed steam saturation
  - Combi-steam (86-482°F) with automatic humidity adjustment
  - Hot air (86-482°F) with optimized heat transfer
- HygienicCare - food safety provided by antibacterial surfaces:
  - easyTouch control panel
  - Door handle and recoil hand shower
- easyTouch user interface:
  - 9" full-touch screen
  - Press&Go - automatic cooking with quick-select buttons
  - TrayTimer - oven-load management for different products at the same time
  - Regenerate+ - flexible multi-mode retherm function
  - ecoCooking - energy-save function
  - Low-temperature cooking / Delta-T cooking
  - Cook&Hold - cook and hold in one process
  - 399 cooking profiles each containing up to 20 steps
  - On-screen help with topic-based video function
  - Start-time preset
- Multi-point core temperature probe
- Door handle with safety latch
- Integral preheat bridge
- Data storage for HACCP and pasteurization figures
- Preheat and Cool down function
- One (1) loading trolley

Options

- Disappearing door – more space and added safety (see page 2)
- ConvoGrill with grease management function (upon request)
- Available in various voltages
- Sous-vide probe, external connection
- Core temperature probe, external connection

Accessories

- ConvoLink HACCP and cooking-profile management PC software
- Signal tower - indicates the operating status from a distance
- Banquet system (optionally as a package or individually): Plate loading trolley, loading trolley, thermal cover
- Cleaning products for the fully automatic ConvoClean+ cleaning system and the semi-automatic cleaning system

GAS-FIRED c UL us LISTED

NSF

Manitowoc Foodservice
18301 St. Clair Ave.
Cleveland, Ohio 44110

Phone 1-800-338-2204

www.convotherm.com

Manitowoc

Convotherm

C4eT 20.10 GS

Dimensions

Weights

Views

Front view

(disappearing door optional)

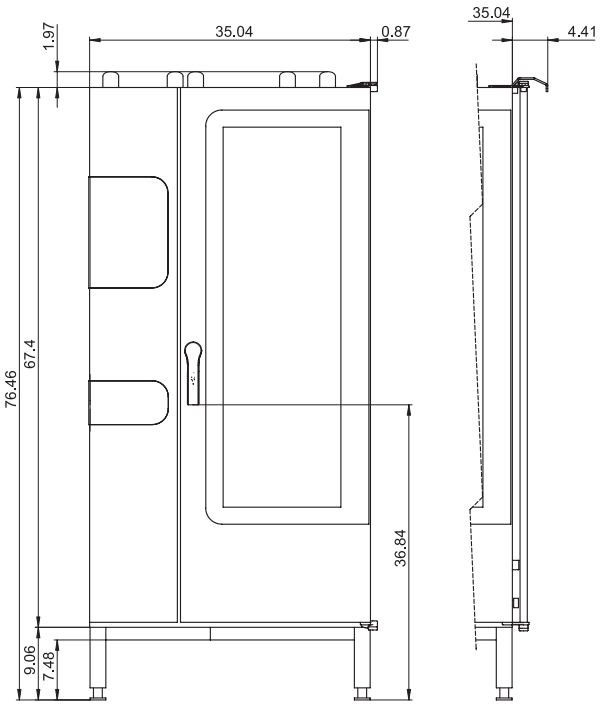

Connection positions

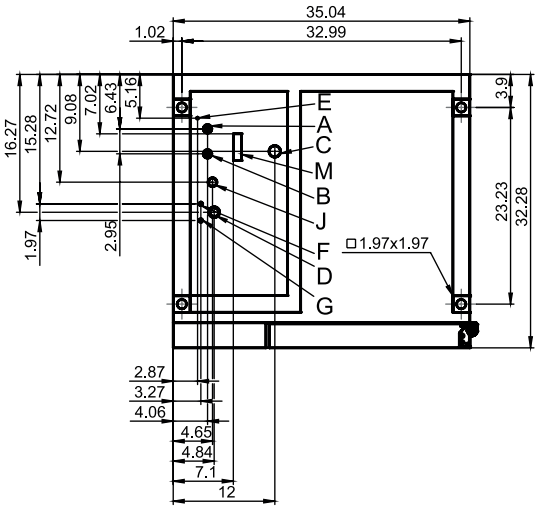

A Water connections (for water injection)

B Water connections (for cleaning, recoil hand shower)

C Drain connection (2" I. D.)

D Electrical connection

E Electrical ground

F Rinse-aid connection

G Cleaning-agent connection

H Air vent (2" I. D.)

I Ventilation port

J Gas connection

K Exhaust outlet (cooking compartment heating element)

M Safety overflow 3.2" x 1"

View from above with wall clearances

(disappearing door optional)

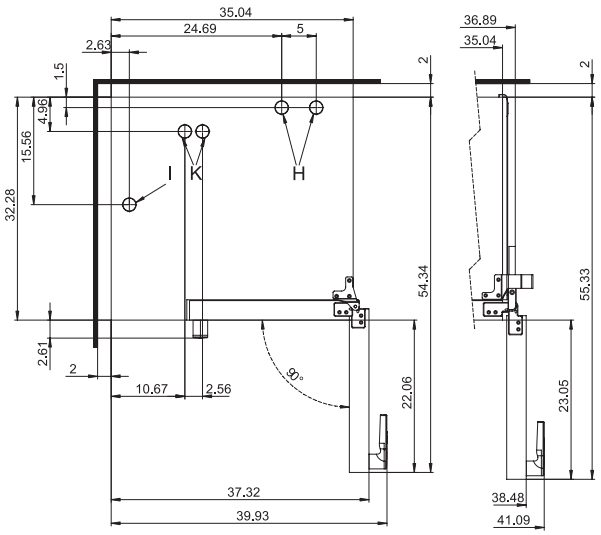

Installation requirements

Max. absolute appliance inclination during operation*	max. 2° (3.4%)

* Adjustable appliance feet as standard.

Dimensions and weights

Dimensions including packaging	
Width x Height x Depth	45.9" x 84.7" x 38.2"
Weight	
Net weight without options* / accessories	613 lbs
Packaging weight	88 lbs
Safety clearances**	
Rear	2 "
Right (right-hinged door)	2 "
Right (disappearing door pushed back)	6 "
Left (18" clearance recommended for service)	2 "
Top***	39"

* Max. weight of options: 59 lbs.

** Minimum clearance from heat sources: 20".

*** Depends on the type of exhaust system and the ceiling's characteristics.

9758266_04 ENG_USA 05/15. © 2015 Manitowoc. Please note that the product is being continuously improved and that, as a result, these specifications are subject to change without notice.

Loading capacity

Max. number of food containers	
[Unit has 20 slide rails; rail spacing 2.68" max.]	
Steam table pans (12"x20"x1")	20
Steam table pans (12"x20"x2.5")	20
Wire shelves, half size (12"x20")	20
Sheet pans, half size (12"x20")	20
Frying baskets, half size (12"x20")	20
Plates (optional plate banquet trolley)	50
Max. loading weight	
Per combi steamer	220 lbs
Per shelf level	33 lbs

Electrical supply

120V 1PH 60Hz *	
Rated power consumption	1.0 kW
Rated current	8.3 A
Power supply wire gauge	14 AWG
Conductor insulation rating	194°F / 90°C

* Prepared for connection to an energy optimizing system.

Water connections

Water supply	
Water supply	Two 3/4" I. D. GHT-M (garden hose adapter). The appliance is designed for a permanent hookup to the water supply that uses a connecting hose with a minimum diameter of 1/2"
Flow pressure	22 - 87 PSI / 1.5 - 6 bar
Drain	
Drain version	Permanent hookup (recommended) or open pan or duct / channel
Type	2" I. D. (comes elbow-shaped as standard)
Slope for drainpipe	min. 3.5% (2°)

Water quality

Water connection A* for water injection	
General requirements	Drinking water, typically treated water (install a water treatment system if necessary)
TDS	70 - 125 ppm
Hardness	70 - 125 ppm (4 - 7 gpg)
Water connection B* for cleaning, recoil hand shower	
General requirements	Drinking water, typically untreated water
TDS	70 - 360 ppm
Hardness	70 - 360 ppm (4 - 21 gpg)
Water connections A, B*	
pH value	6.5 - 8.5
Cl^- (chloride)	max. 60 ppm
Cl_2 (free chlorine)	max. 0.2 ppm
SO_4^{2-} (sulfate)	max. 150 ppm
Fe (iron)	max. 0.1 ppm
SiO_2 (silica)	max. 13 ppm
NH_2Cl (monochloramine)	max. 0.4 ppm
Temperature	max. 104°F / max. 40°C

* See connection positions diagram, p. 2.

NOTICE: The owner/operator/purchaser must ensure that the water quality requirements are met. Otherwise the original equipment warranty is void.

C4eT 20.10 GS

Emissions

Heat emission	
Latent	6800 BTU/h
Sensitive	7800 BTU/h
Drain temperature	max. 140°F / 60°C
Decibel rating	max. 70 dBA

Water consumption

Water connection A*	
Average consumption for cooking	2.14 gph
Required flow rate	0.16 gpm
Water connections A, B	
Average consumption for cooking**	3.22 gph
Required flow rate	3.96 gpm

* Values intended as guide for specifying the water treatment system.

** Incl. water required for cooling the wastewater.

NOTICE: See connection positions diagram, p. 2.

Gas specifications

Type of gas	Natural gas, propane
Gas connection	3/4" NPT
Flow pressure	
Natural gas	5.5 - 14" WC
Propane	11 - 14" WC
Heat output	For Natural gas, propane
Convection burner	143000 BTU/h

Please note:

- Please refer to the Installation manual for further technical data and for instructions on installation and setup.
- Convotherm reserves the right of design improvement or modification, as warranted.
- There are numerous federal, national and local laws, regulations and standards. It is the responsibility of the owner and installer to observe these laws, regulations and standards (e.g. fire regulations and health and safety standards).
- Convotherm combi steamers are built to comply with the applicable standards for manufacturers.

9758266_04 ENG_ USA 05/15. © 2015 Manitowoc. Please note that the product is being continuously improved and that, as a result, these specifications are subject to change without notice.