Convotherm

# Combi steamer

Project _____

Item _____

Quantity _____

FCSI section _____

Approval _____

Date _____

C4eT 10.20 ES

## Model

Convotherm 4 easyTouch

- easyTouch
- 11 slide rails
- Electrical
- Injection/Spritzer
- Right-hinged door



## Key features

- ACS+ operating modes: Steam, combi-steam, hot air
- ACS+ extra functions:
  - Crisp&Tasty - 5 moisture-removal settings
  - BakePro - 5 levels of traditional baking
  - HumidityPro - 5 humidity settings
  - Controllable fan - 5 speed settings
- easyTouch 9" full-touch screen
- ConvoClean+ fully automatic cleaning system with eco, regular and express modes - with optional single-dose dispensing
- Ethernet interface (LAN)
- HygienicCare
- USB port integrated in the control panel
- TriColor indicator ring - indicates the current operating status
- Steam generated by injecting water into the cooking chamber
- Right-hinged door
- KNLZ listed for ventless operation, local codes prevail as in NFPA 96-1994

## Standard features

- ACS+ (Advanced Closed System +) operating modes:
  - Steam (86-266°F) with guaranteed steam saturation
  - Combi-steam (86-482°F) with automatic humidity adjustment
  - Hot air (86-482°F) with optimized heat transfer
- HygienicCare - food safety provided by antibacterial surfaces:
  - easyTouch control panel
  - Door handle and recoil hand shower
- easyTouch user interface:
  - 9" full-touch screen
  - Press&Go - automatic cooking with quick-select buttons
  - TrayTimer - oven-load management for different products at the same time
  - Regenerate+ - flexible multi-mode retherm function
  - ecoCooking - energy-save function
  - Low-temperature cooking / Delta-T cooking
  - Cook&Hold - cook and hold in one process
  - 399 cooking profiles each containing up to 20 steps
  - On-screen help with topic-based video function
  - Start-time preset
- Multi-point core temperature probe
- Door handle with safety latch and slam function
- Data storage for HACCP and pasteurization figures
- Preheat and Cool down function

## Options

- Steam and vapor removal – built-in condenser (upon request)
- Disappearing door – more space and added safety (see page 2)
- ConvoGrill with grease management function (upon request)
- ConvoSmoke - built in food-smoking
- Marine version (see separate data sheet)
- Available in various voltages
- Sous-vide probe, external connection
- Core temperature probe, external connection

## Accessories

- ConvoLink HACCP and cooking-profile management PC software
- Signal tower - indicates the operating status from a distance
- Banquet system (optionally as a package or individually): Plate rack, mobile shelf rack, transport trolley, thermal cover
- Equipment stands in various sizes and designs
- Racks for cooking and baking
- Stacking kits
- Cleaning products for the fully automatic ConvoClean+ cleaning system and the semi-automatic cleaning system

Commercial combination oven with integral systems for limiting the emissions of grease laden air
This product conforms to the ventless operation recommendations set forth by NFPA96 using EPA202 test method

c UL us LISTED COOKING APPLIANCE E202205

NSF

Manitowoc Foodservice
18301 St. Clair Ave.
Cleveland, Ohio 44110

Phone 1-800-338-2204

www.convotherm.com

Manitowoc

## Front view

(disappearing door optional)

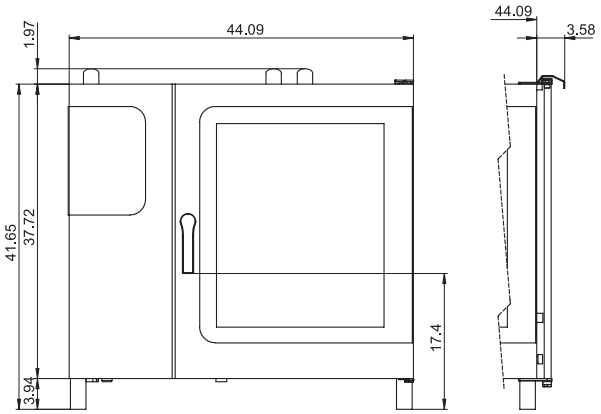


## Connection positions

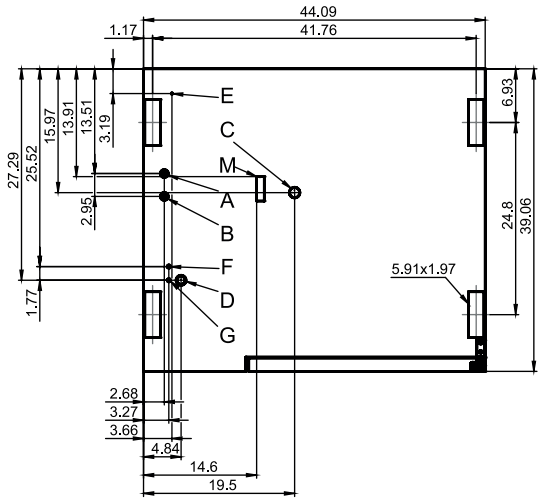


## View from above with wall clearances

(disappearing door optional)

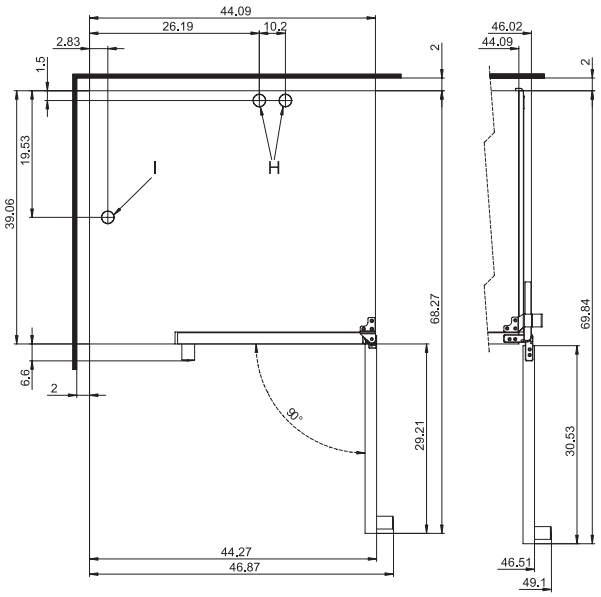


- **A** Water connections (for water injection)
- **B** Water connections (for cleaning, recoil hand shower)
- **C** Drain connection (2" I. D.)
- **D** Electrical connection
- **E** Electrical ground
- **F** Rinse-aid connection
- **G** Cleaning-agent connection
- **H** Air vent (2" I. D.)
- **I** Ventilation port
- **M** Safety overflow 3.2" x 1"

## Installation requirements

| | |
|---|---|
| Max. absolute appliance inclination during operation* | max. 2° (3.4%) |

* Adjustable appliance feet as standard.

## Dimensions and weights

| | |
|---|---|
| **Dimensions including packaging** | |
| Width x Height x Depth | 53" x 50.4" x 44.9" |
| **Weight** | |
| Net weight without options* / accessories | 392 lbs |
| Packaging weight | 77 lbs |
| **Safety clearances**** | |
| Rear | 2 " |
| Right (right-hinged door) | 2 " |
| Right (disappearing door pushed back) | 5 " |
| Left (18" clearance recommended for service) | 2 " |
| Top*** | 20" |

* Max. weight of options: 46 lbs.

** Minimum clearance from heat sources: 20".

*** Depends on the type of exhaust system and the ceiling's characteristics.

9758248_04 ENG_USA 05/15. © 2015 Manitowoc. Please note that the product is being continuously improved and that, as a result, these specifications are subject to change without notice.

## Loading capacity

| **Max. number of food containers** | |
|---|---|
| [Unit has 11 slide rails; rail spacing 2.68" max.] | |
| Steam table pans (12"x20"x1") | 20 |
| Steam table pans (12"x20"x2.5") | 20 |
| Wire shelves, full size (20"x26") | 10 |
| Sheet pans, full size (18"x26")* | 10 |
| Sheet pans, half size (12"x20")* | 20 |
| Frying baskets, half size (12"x20") | 20 |
| Plates (optional plate rack) | 48 |
| **Max. loading weight** | |
| Per combi steamer | 220 lbs |
| Per shelf level | 33 lbs |

* Wire shelves required.

## Electrical supply

| **208V 3PH 60Hz / 240V 3PH 60Hz** * | |
|---|---|
| Rated power consumption | 27.4 / 36.3 kW |
| Rated current | 76.1 / 87.5 A |
| Power supply wire gauge | 3/2 AWG |
| Conductor insulation rating | 194°F / 90°C |
| **440V 3PH 60Hz / 480V 3PH 60Hz** * | |
| Rated power consumption | 28.2 / 33.4 kW |
| Rated current | 37.0 / 40.3 A |
| Power supply wire gauge | 8/6 AWG |
| Conductor insulation rating | 194°F / 90°C |
| When using the ConvoSmoke option, the only available voltage options are: | |
| **208V 3PH 60Hz** * | |
| Rated power consumption | 27.4 kW |
| Rated current | 76.1 A |
| Power supply wire gauge | 3 AWG |
| Conductor insulation rating | 194°F / 90°C |
| **240V 3PH 60Hz** * | |
| Rated power consumption | 36.3 kW |
| Rated current | 87.5 A |
| Power supply wire gauge | 2 AWG |
| Conductor insulation rating | 194°F / 90°C |

* Prepared for connection to an energy optimizing system.

## Water connections

| **Water supply** | |
|---|---|
| Water supply | Two 3/4" I. D. GHT-M (garden hose adapter). The appliance is designed for a permanent hookup to the water supply that uses a connecting hose with a minimum diameter of 1/2" |
| Flow pressure | 22 - 87 PSI / 1.5 - 6 bar |
| **Drain** | |
| Drain version | Permanent hookup (recommended) or funnel waste trap |
| Type | 2" I. D. (comes elbow-shaped as standard) |
| Slope for drainpipe | min. 3.5% (2°) |

## Water quality

| **Water connection A* for water injection** | |
|---|---|
| General requirements | Drinking water, typically treated water (install a water treatment system if necessary) |
| TDS | 70 - 125 ppm |
| Hardness | 70 - 125 ppm (4 - 7 gpg) |
| **Water connection B* for cleaning, recoil hand shower** | |
| General requirements | Drinking water, typically untreated water |
| TDS | 70 - 360 ppm |
| Hardness | 70 - 360 ppm (4 - 21 gpg) |
| **Water connections A, B*** | |
| pH value | 6.5 - 8.5 |
| $Cl^-$ (chloride) | max. 60 ppm |
| $Cl_2$ (free chlorine) | max. 0.2 ppm |
| $SO_4^{2-}$ (sulfate) | max. 150 ppm |
| Fe (iron) | max. 0.1 ppm |
| $SiO_2$ (silica) | max. 13 ppm |
| $NH_2Cl$ (monochloramine) | max. 0.4 ppm |
| Temperature | max. 104°F / max. 40°C |

* See connection positions diagram, p. 2.

NOTICE: The owner/operator/purchaser must ensure that the water quality requirements are met. Otherwise the original equipment warranty is void.

## Emissions

| | |
|---|---|
| **Heat emission** | |
| Latent | 6100 BTU/h |
| Sensitive | 7400 BTU/h |
| **Drain temperature** | max. 140°F / 60°C |
| **Decibel rating** | max. 70 dBA |

## Water consumption

| | |
|---|---|
| **Water connection A*** | |
| Average consumption for cooking | 1.95 gph |
| Required flow rate | 0.16 gpm |
| **Water connections A, B** | |
| Average consumption for cooking** | 2.93 gph |
| Required flow rate | 3.96 gpm |

* Values intended as guide for specifying the water treatment system.

** Incl. water required for cooling the wastewater.

NOTICE: See connection positions diagram, p. 2.

**Please note:**

- Please refer to the Installation manual for further technical data and for instructions on installation and setup.
- Convotherm reserves the right of design improvement or modification, as warranted.
- There are numerous federal, national and local laws, regulations and standards. It is the responsibility of the owner and installer to observe these laws, regulations and standards (e.g. fire regulations and health and safety standards).
- Convotherm combi steamers are built to comply with the applicable standards for manufacturers.

## ACCESSORIES

(For more detailed information, please refer to the Accessories brochure.)

## Stacking kit

| | |
|---|---|
| Combination allowed | 6.20 on 10.20 |
| **If combining two electrical units** | |
| Select the “stacking kit for Convotherm 4 electrical units” | |
| **If combining one electrical unit and one gas unit in a stacking kit** | |
| Select the “stacking kit for Convotherm 4 electrical units” if: | |
| Bottom combi steamer | EB/ES |
| Top combi steamer | GB/GS |
| Select the “stacking kit for Convotherm 4 gas units” if: | |
| Bottom combi steamer | GB/GS |
| Top combi steamer | EB/ES |

## Equipment stand

| | |
|---|---|
| Standard support surface height | 26.38" |

KNLZ Update 2017

9758248_04 ENG_ USA 05/15. © 2015 Manitowoc. Please note that the product is being continuously improved and that, as a result, these specifications are subject to change without notice.