Convotherm

Combi steamer

Project _____

Item _____

Quantity _____

FCSI section _____

Approval _____

Date _____

C4eD 6.10 ES

Model

Convotherm 4 easyDial

- easyDial
- 7 slide rails

- Electrical
- Injection/Spritzer
- Right-hinged door



Key features

- ACS+ operating modes: Steam, combi-steam, hot air
- ACS+ extra functions:
  - Crisp&Tasty - 5 moisture-removal settings
  - BakePro - 5 levels of traditional baking
  - HumidityPro - 5 humidity settings
  - Controllable fan - 5 speed settings
- easyDial: all functions are set in one operating level
- Semi-automatic cleaning system
- HygienicCare
- USB port integrated in the control panel
- TriColor indicator ring - indicates the current operating status
- Steam generated by injecting water into the cooking chamber
- Right-hinged door
- KNLZ listed for ventless operation, local codes prevail as in NFPA 96-1994

Standard features

- ACS+ (Advanced Closed System +) operating modes:
  - Steam (86-266°F) with guaranteed steam saturation
  - Combi-steam (86-482°F) with automatic humidity adjustment
  - Hot air (86-482°F) with optimized heat transfer
- HygienicCare - food safety provided by antibacterial surfaces:
  - easyDial control panel
  - Door handle and recoil hand shower
- easyDial user interface:
  - Convotherm Dial (C-Dial) central control unit
  - Digital display
  - Retherming function - retherm products to peak quality
  - 99 cooking profiles each containing up to 9 steps
- Multi-point core temperature probe
- Door handle with safety latch and slam function
- Data storage for HACCP and pasteurization figures
- Preheat and Cool down function

Options

- ConvoClean fully automatic cleaning system - with optional single-dose dispensing
- Steam and vapor removal – built-in condenser (upon request)
- Disappearing door – more space and added safety (see page 2)
- Marine version (see separate data sheet)
- Ethernet port (LAN)
- Available in various voltages
- Sous-vide probe, external connection
- Core temperature probe, external connection

Accessories

- ConvoLink HACCP and cooking-profile management PC software
- Signal tower - indicates the operating status from a distance
- Banquet system (optionally as a package or individually): Plate rack, mobile shelf rack, transport trolley, thermal cover
- Equipment stands in various sizes and designs
- Racks for cooking and baking
- Stacking kits
- Cleaning products for the fully automatic ConvoClean cleaning system and the semi-automatic cleaning system

Commercial combination oven with integral systems for limiting the emissions of grease laden air
This product conforms to the ventless operation recommendations set forth by NFPA96 using EPA202 test method

c UL us LISTED COOKING APPLIANCE E205205

NSF

Manitowoc Foodservice
18301 St. Clair Ave.
Cleveland, Ohio 44110

Phone 1-800-338-2204

www.convotherm.com

Manitowoc

Convotherm

Dimensions
Weights
Views

C4eD 6.10 ES

Front view

(disappearing door optional)

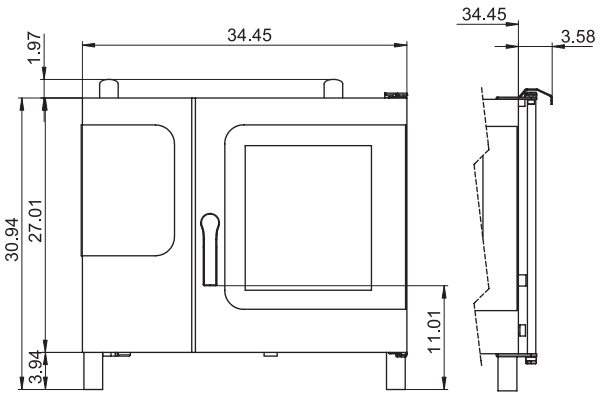

View from above with wall clearances

(disappearing door optional)

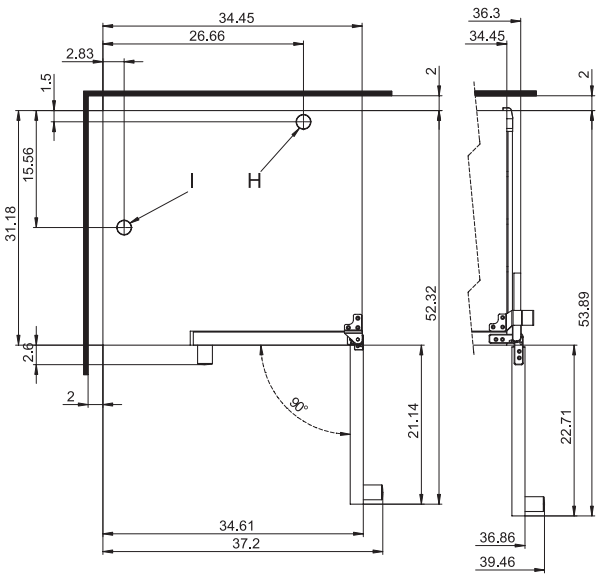

Installation requirements

Max. absolute appliance inclination during operation*	max. 2° (3.4%)

* Adjustable appliance feet as standard.

Connection positions

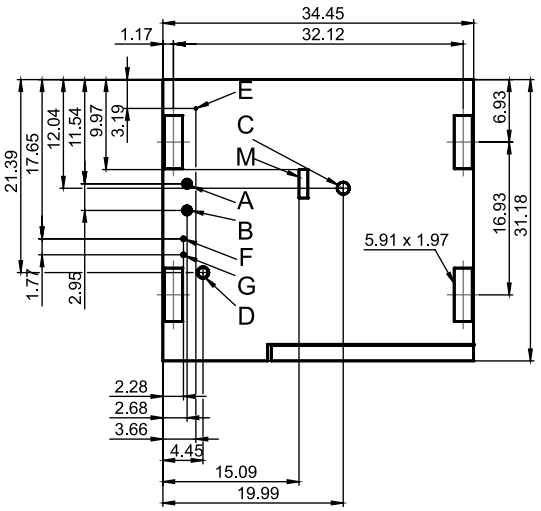

A Water connections (for water injection)
B Water connections (for cleaning, recoil hand shower)
C Drain connection (2" I. D.)
D Electrical connection
E Electrical ground
F Rinse-aid connection
G Cleaning-agent connection
H Air vent (2" I. D.)
I Ventilation port
M Safety overflow 3.2" x 1"

Dimensions and weights

Dimensions including packaging	
Width x Height x Depth	43.3" x 39.8" x 37"
Weight	
Net weight without options* / accessories	234 lbs
Packaging weight	55 lbs
Safety clearances**	
Rear	2 "
Right (right-hinged door)	2 "
Right (disappearing door pushed back)	5 "
Left (18" clearance recommended for service)	2 "
Top***	20"

* Max. weight of options: 42 lbs.

** Minimum clearance from heat sources: 20".

*** Depends on the type of exhaust system and the ceiling's characteristics.

9758280_04 ENG_USA 05/15. © 2015 Manitowoc. Please note that the product is being continuously improved and that, as a result, these specifications are subject to change without notice.

Loading capacity

Max. number of food containers	
[Unit has 7 slide rails; rail spacing 2.68" max.]	
Steam table pans (12"x20"x1")	6
Steam table pans (12"x20"x2.5")	6
Wire shelves, half size (12"x20")	6
Sheet pans, half size (12"x20")	6
Frying baskets, half size (12"x20")	6
Plates (optional plate rack)	15
Max. loading weight	
Per combi steamer	66 lbs
Per shelf level	33 lbs

Electrical supply

208V 3PH 60Hz / 240V 3PH 60Hz *	
Rated power consumption	9.0 / 11.8 kW
Rated current	25.0 / 28.5 A
Power supply wire gauge	8 AWG
Conductor insulation rating	194°F / 90°C
440V 3PH 60Hz / 480V 3PH 60Hz *	
Rated power consumption	9.2 / 10.9 kW
Rated current	12.1 / 13.1 A
Power supply wire gauge	12 AWG
Conductor insulation rating	194°F / 90°C

* Prepared for connection to an energy optimizing system.

Water connections

Water supply	
Water supply	Two 3/4" I. D. GHT-M (garden hose adapter). The appliance is designed for a permanent hookup to the water supply that uses a connecting hose with a minimum diameter of 1/2"
Flow pressure	22 - 87 PSI / 1.5 - 6 bar
Drain	
Drain version	Permanent hookup (recommended) or funnel waste trap
Type	2" I. D. (comes elbow-shaped as standard)
Slope for drainpipe	min. 3.5% (2°)

Water quality

Water connection A* for water injection	
General requirements	Drinking water, typically treated water (install a water treatment system if necessary)
TDS	70 - 125 ppm
Hardness	70 - 125 ppm (4 - 7 gpg)
Water connection B* for cleaning, recoil hand shower	
General requirements	Drinking water, typically untreated water
TDS	70 - 360 ppm
Hardness	70 - 360 ppm (4 - 21 gpg)
Water connections A, B*	
pH value	6.5 - 8.5
Cl^- (chloride)	max. 60 ppm
Cl_2 (free chlorine)	max. 0.2 ppm
SO_4^{2-} (sulfate)	max. 150 ppm
Fe (iron)	max. 0.1 ppm
SiO_2 (silica)	max. 13 ppm
NH_2Cl (monochloramine)	max. 0.4 ppm
Temperature	max. 104°F / max. 40°C

* See connection positions diagram, p. 2.

NOTICE: The owner/operator/purchaser must ensure that the water quality requirements are met. Otherwise the original equipment warranty is void.

Emissions

Heat emission	
Latent	2000 BTU/h
Sensitive	2400 BTU/h
Drain temperature	max. 140°F / 60°C
Decibel rating	max. 70 dBA

Water consumption

Water connection A*	
Average consumption for cooking	0.61 gph
Required flow rate	0.16 gpm
Water connections A, B	
Average consumption for cooking**	0.92 gph
Required flow rate	3.96 gpm

* Values intended as guide for specifying the water treatment system.

** Incl. water required for cooling the wastewater.

NOTICE: See connection positions diagram, p. 2.

Please note:

- Please refer to the Installation manual for further technical data and for instructions on installation and setup.
- Convotherm reserves the right of design improvement or modification, as warranted.
- There are numerous federal, national and local laws, regulations and standards. It is the responsibility of the owner and installer to observe these laws, regulations and standards (e.g. fire regulations and health and safety standards).
- Convotherm combi steamers are built to comply with the applicable standards for manufacturers.

ACCESSORIES

(For more detailed information, please refer to the Accessories brochure.)

Stacking kit

Combinations allowed	6.10 on 6.10 6.10 on 10.10
If combining two electrical units	
Select the “stacking kit for Convotherm 4 electrical units”	
If combining one electrical unit and one gas unit in a stacking kit	
Select the “stacking kit for Convotherm 4 electrical units” if:	
Bottom combi steamer	EB/ES
Top combi steamer	GB/GS
Select the “stacking kit for Convotherm 4 gas units” if:	
Bottom combi steamer	GB/GS
Top combi steamer	EB/ES

Equipment stand

Standard support surface height	26.38"

KNLZ Update 2017

9758280_04 ENG_ USA 05/15. © 2015 Manitowoc. Please note that the product is being continuously improved and that, as a result, these specifications are subject to change without notice.