Convotherm

# Combi steamer

Project _____

Item _____

Quantity _____

FCSI section _____

Approval _____

Date _____

C4eD 20.20 EB

## Model

## Convotherm 4 easyDial

- easyDial
- 20 slide rails
- Electrical
- Boiler
- Right-hinged door



## Key features

- ACS+ operating modes: Steam, combi-steam, hot air
- ACS+ extra functions:
  - Crisp&Tasty - 5 moisture-removal settings
  - BakePro - 5 levels of traditional baking
  - HumidityPro - 5 humidity settings
  - Controllable fan - 5 speed settings
- easyDial: all functions are set in one operating level
- Semi-automatic cleaning system
- HygienicCare
- USB port integrated in the control panel
- TriColor indicator ring - indicates the current operating status
- Steam generated by high-performance boiler outside the cooking chamber
- Right-hinged door

## Standard features

- ACS+ (Advanced Closed System +) operating modes:
  - Steam (86-266°F) with guaranteed steam saturation
  - Combi-steam (86-482°F) with automatic humidity adjustment
  - Hot air (86-482°F) with optimized heat transfer
- HygienicCare - food safety provided by antibacterial surfaces:
  - easyDial control panel
  - Door handle and recoil hand shower
- easyDial user interface:
  - Convotherm Dial (C-Dial) central control unit
  - Digital display
  - Retherming function - retherm products to peak quality
  - 99 cooking profiles each containing up to 9 steps
- Multi-point core temperature probe
- Door handle with safety latch
- Integral preheat bridge
- Data storage for HACCP and pasteurization figures
- Preheat and Cool down function
- One (1) loading trolley

## Options

- ConvoClean fully automatic cleaning system - with optional single-dose dispensing
- Steam and vapor removal – built-in condenser (upon request)
- Disappearing door – more space and added safety (see page 2)
- Marine version (see separate data sheet)
- Ethernet port (LAN)
- Available in various voltages
- Sous-vide probe, external connection
- Core temperature probe, external connection

## Accessories

- ConvoLink HACCP and cooking-profile management PC software
- Signal tower - indicates the operating status from a distance
- Banquet system (optionally as a package or individually): Plate loading trolley, loading trolley, thermal cover
- Cleaning products for the fully automatic ConvoClean cleaning system and the semi-automatic cleaning system

c UL us LISTED COOKING APPLIANCE E350599

NSF

Manitowoc Foodservice
18301 St. Clair Ave.
Cleveland, Ohio 44110

Phone 1-800-338-2204

www.convotherm.com

Manitowoc

C4eD 20.20 EB

## Front view

(disappearing door optional)

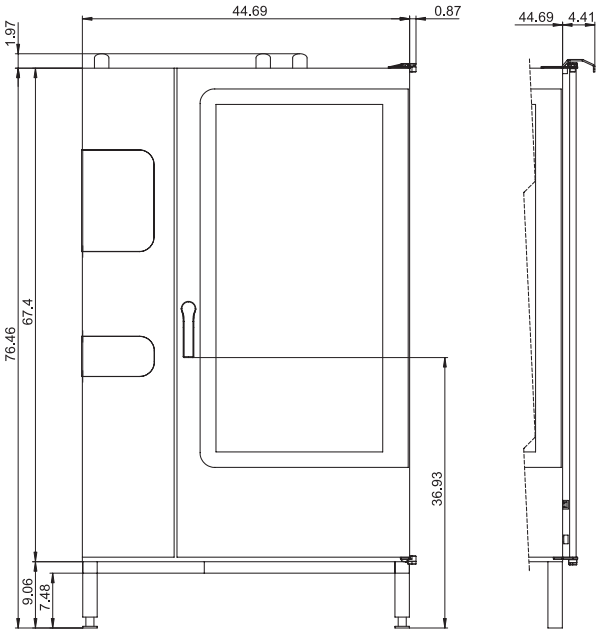


## View from above with wall clearances

(disappearing door optional)

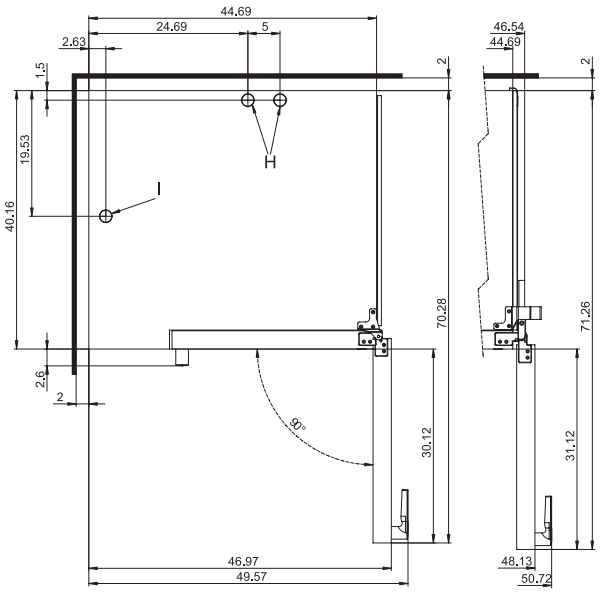


## Installation requirements

| | |
|---|---|
| Max. absolute appliance inclination during operation* | max. 2° (3.4%) |

* Adjustable appliance feet as standard.

## Connection positions

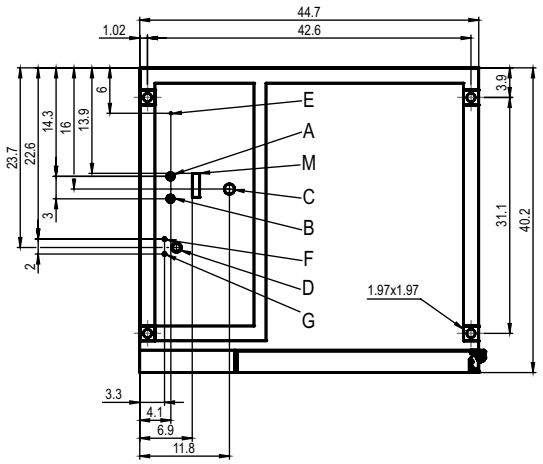


**A** Water connections (for boiler)
**B** Water connections (for cleaning, recoil hand shower)
**C** Drain connection (2" I. D.)
**D** Electrical connection
**E** Electrical ground
**F** Rinse-aid connection
**G** Cleaning-agent connection
**H** Air vent (2" I. D.)
**I** Ventilation port
**M** Safety overflow 3.2" x 1"

## Dimensions and weights

| | |
|---|---|
| **Dimensions including packaging** | |
| Width x Height x Depth | 55.5" x 84.7" x 46.1" |
| **Weight** | |
| Net weight without options* / accessories | 783 lbs |
| Packaging weight | 106 lbs |
| **Safety clearances**** | |
| Rear | 2 " |
| Right (right-hinged door) | 2 " |
| Right (disappearing door pushed back) | 6 " |
| Left (18" clearance recommended for service) | 2 " |
| Top*** | 20" |

* Max. weight of options: 59 lbs.

** Minimum clearance from heat sources: 20".

*** Depends on the type of exhaust system and the ceiling's characteristics.

9758329_04 ENG_USA 05/15. © 2015 Manitowoc. Please note that the product is being continuously improved and that, as a result, these specifications are subject to change without notice.

## Loading capacity

| **Max. number of food containers** | |
|---|---|
| [Unit has 20 slide rails; rail spacing 2.68" max.] | |
| Steam table pans (12"x20"x1") | 40 |
| Steam table pans (12"x20"x2.5") | 40 |
| Wire shelves, full size (20"x26") | 20 |
| Sheet pans, full size (18"x26")* | 20 |
| Sheet pans, half size (12"x20")* | 40 |
| Frying baskets, half size (12"x20") | 40 |
| Plates (optional plate banquet trolley) | 98 |
| **Max. loading weight** | |
| Per combi steamer | 397 lbs |
| Per shelf level | 33 lbs |

* Wire shelves required.

## Electrical supply

| **208V 3PH 60Hz / 240V 3PH 60Hz** * | |
|---|---|
| Rated power consumption | 54.4 / 72.3 kW |
| Rated current | 151.1 / 174.1 A |
| Power supply wire gauge | 2/0 3/0 AWG |
| Conductor insulation rating | 194°F / 90°C |
| **440V 3PH 60Hz / 480V 3PH 60Hz** * | |
| Rated power consumption | 56.3 / 66.8 kW |
| Rated current | 73.9 / 80.5 A |
| Power supply wire gauge | 4/3 AWG |
| Conductor insulation rating | 194°F / 90°C |

* Prepared for connection to an energy optimizing system.

## Water connections

| **Water supply** | |
|---|---|
| Water supply | Two 3/4" I. D. GHT-M (garden hose adapter). The appliance is designed for a permanent hookup to the water supply that uses a connecting hose with a minimum diameter of 1/2" |
| Flow pressure | 22 - 87 PSI / 1.5 - 6 bar |
| **Drain** | |
| Drain version | Permanent hookup (recommended) or open pan or duct / channel |
| Type | 2" I. D. (comes elbow-shaped as standard) |
| Slope for drainpipe | min. 3.5% (2°) |

## Water quality

| **Water connection A* for boiler, Water connection B* for cleaning, recoil hand shower** | |
|---|---|
| General requirements | Drinking water, typically untreated water |
| TDS | 70 - 360 ppm |
| Hardness | 70 - 360 ppm (4 - 21 gpg) |
| pH value | 6.5 - 8.5 |
| $Cl^-$ (chloride) | max. 60 ppm |
| $Cl_2$ (free chlorine) | max. 0.2 ppm |
| $SO_4^{2-}$ (sulfate) | max. 150 ppm |
| Fe (iron) | max. 0.1 ppm |
| $SiO_2$ (silica) | max. 13 ppm |
| $NH_2Cl$ (monochloramine) | max. 0.4 ppm |
| Temperature | max. 104°F / max. 40°C |

* See connection positions diagram, p. 2.

NOTICE: The owner/operator/purchaser must ensure that the water quality requirements are met. Otherwise the original equipment warranty is void.

C4eD 20.20 EB

## Emissions

| | |
|---|---|
| **Heat emission** | |
| Latent | 10500 BTU/h |
| Sensitive | 13400 BTU/h |
| **Drain temperature** | max. 140°F / 60°C |
| **Decibel rating** | max. 70 dBA |

## Water consumption

| | |
|---|---|
| **Water connections A, B** | |
| Average consumption for cooking** | 3.54 gph |
| Required flow rate | 3.96 gpm |

** Incl. water required for cooling the wastewater.

NOTICE: See connection positions diagram, p. 2.

**Please note:**

- Please refer to the Installation manual for further technical data and for instructions on installation and setup.
- Convotherm reserves the right of design improvement or modification, as warranted.
- There are numerous federal, national and local laws, regulations and standards. It is the responsibility of the owner and installer to observe these laws, regulations and standards (e.g. fire regulations and health and safety standards).
- Convotherm combi steamers are built to comply with the applicable standards for manufacturers.

9758329_04 ENG_USA 05/15. © 2015 Manitowoc. Please note that the product is being continuously improved and that, as a result, these specifications are subject to change without notice.