Convotherm

# Combi steamer

Project _____

Item _____

Quantity _____

FCSI section _____

Approval _____

Date _____

C4eD 10.10 ES

## Model

Convotherm 4 easyDial

- easyDial
- 11 Shelves
- Electric
- Injection/Spritzer
- Right-hinged door



## Key features

- ACS+ operating modes: Steam, combi-steam, hot air
- ACS+ extra functions:
  - Crisp&Tasty - 5 moisture-removal settings
  - BakePro - 5 levels of traditional baking
  - HumidityPro - 5 humidity settings
  - Controllable fan - 5 speed settings
- easyDial: all functions are set in one operating level
- Semi-automatic cleaning system
- HygienicCare
- USB port integrated in the control panel
- TriColor indicator ring - indicates the current operating status
- Steam generated by injecting water into the cooking chamber
- Right-hinged door

## Standard features

- ACS+ (Advanced Closed System +) operating modes:
  - Steam (86-266°F) with guaranteed steam saturation
  - Combi-steam (86-482°F) with automatic humidity adjustment
  - Hot air (86-482°F) with optimized heat transfer
- HygienicCare - food safety provided by antibacterial surfaces:
  - easyDial control panel
  - Door handle and recoil hand shower
- easyDial user interface:
  - Convotherm Dial (C-Dial) central control unit
  - Digital display
  - Retherming function - retherm products to peak quality
  - 99 cooking profiles each containing up to 9 steps
- Multi-point core temperature probe
- Door handle with safety latch and slam function
- Data storage for HACCP and pasteurization figures
- Preheat and Cool down function

## Options

- ConvoClean fully automatic cleaning system - with optional single-dose dispensing
- Steam and vapor removal - built-in condenser
- Disappearing door - more space and added safety (details see on page 2)
- Grill version with grease management
- Marine version (see separate data sheet)
- Ethernet port (LAN)
- Available in various voltages
- Sous-vide probe, external connection
- Core temperature probe, external connection

## Accessories

- ConvoLink HACCP and cooking-profile management PC software
- ConvoVent 4 condensation hood with integrated grease filter
- ConvoVent 4+ condensation hood with integrated grease and odor filter
- Signal tower - indicates the operating status from a distance
- Banquet system (optionally as a package or individually): Plate rack, mobile shelf rack, transport trolley, thermal cover
- Equipment stands in various sizes and designs
- Racks for cooking and baking
- Stacking kits
- Cleaning products for the fully automatic ConvoClean cleaning system and the semi-automatic cleaning system

C4eD 10.10 ES

## Front view

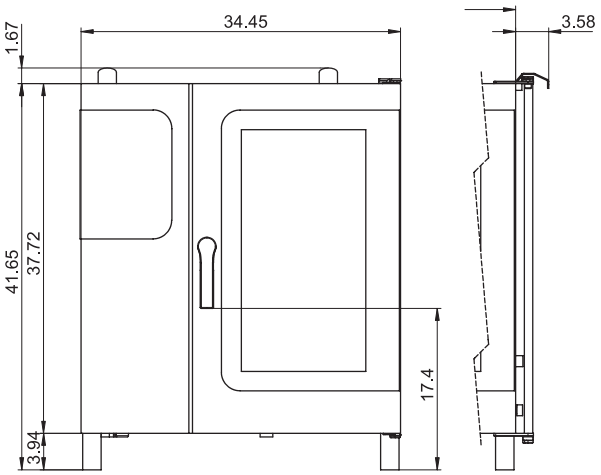


## Connection positions

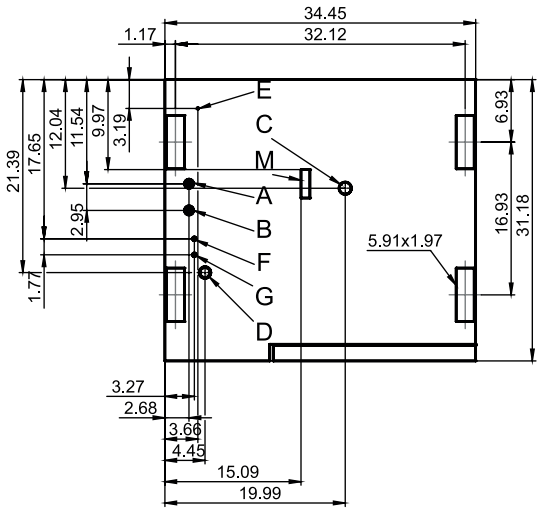


**A** Water connections (for water injection)

**B** Water connections (for cleaning, recoil hand shower)

**C** Drain connection (2" I. D.)

**D** Electrical connection

**E** Electrical ground

**F** Rinse-aid connection

**G** Cleaning-agent connection

**H** Air vent (2" I. D.)

**I** Ventilation port

**M** Safety overflow 3.2" x 1"

## View from above with wall clearances

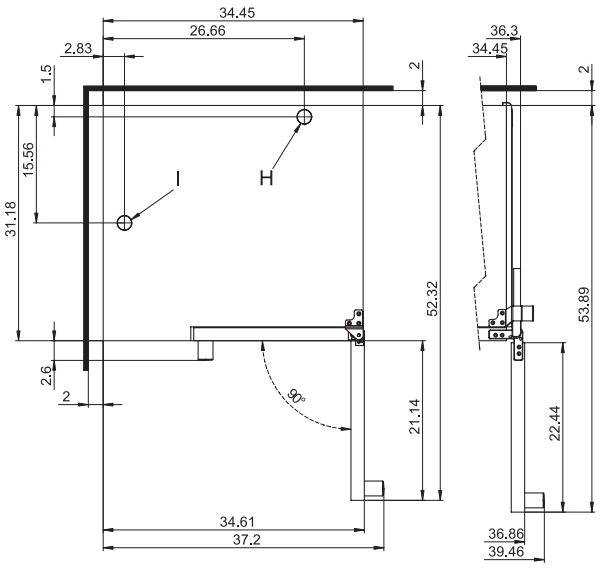


## Dimensions and weights

| | |
|---|---|
| **Dimensions including packaging** | |
| Width x Height x Depth | 43.3" x 50.4" x 37" |
| **Weight** | |
| Net weight without options* / accessories | 276 lbs |
| Packaging weight | 66 lbs |
| **Safety clearances**** | |
| Rear | 2 " |
| Right (right-hinged door) | 2 " |
| Right (disappearing door pushed back) | 5 " |
| Left (18" clearance recommended for service) | 2 " |
| Top*** | 20" |

*Max. weight of options: 46 lbs.

**Minimum clearance from heat sources: 20".

***Depends on the type of exhaust system and the ceiling's characteristics.

## Installation requirements

| | |
|---|---|
| **Inclination** | |
| Max. absolute appliance inclination during operation* | max. 2° (3.4%) |

*Adjustable appliance feet as standard.

9758296_03 ENG_USA 01/15. © 2015 Manitowoc. Please note that the product is being continuously improved and that, as a result, these specifications are subject to change without notice.

## Loading capacity

| Max. number of food containers | |
|---|---|
| [Unit has 11 shelves, shelf spacing 2.68" max.] | |
| Steam table pans (12"x20"x1") | 10 |
| Steam table pans (12"x20"x2.5") | 10 |
| Half size wire racks (13"x20") | 10 |
| Half size sheet pans (13"x18") | 10 |
| Frying baskets (12"x20") | 10 |
| Plates (optional plate rack) | 26 |
| **Max. loading weight** | |
| Per combi steamer | 110 lbs |
| Per shelf | 33 lbs |

## Electrical supply

| 208V 3PH 60Hz / 240V 3PH 60Hz * | |
|---|---|
| Rated power consumption | 15.9 / 21.0 kW |
| Rated current | 44.1 / 50.6 A |
| Power supply wire gauge | 6 AWG |
| Conductor insulation rating | 194°F / 90 °C |
| **440V 3PH 60Hz / 480V 3PH 60Hz *** | |
| Rated power consumption | 16.3 / 19.3 kW |
| Rated current | 21.4 / 23.3 A |
| Power supply wire gauge | 8 AWG |
| Conductor insulation rating | 194°F / 90 °C |

* Prepared for connection to an energy optimizing system.

## Water connections

| Water supply | |
|---|---|
| Water supply | Two 3/4" I. D. GHT-M (garden hose adapter). The appliance is designed for a permanent hookup to the water supply that uses a connecting hose with a minimum diameter of 1/2" |
| Flow pressure | 22 - 87 PSI / 1.5 - 6 bar |
| **Drain** | |
| Drain version | Permanent hookup (recommended) or funnel waste trap |
| Type | 2" I. D. (comes elbow-shaped as standard) |
| Slope for drainpipe | min. 3.5% (2°) |

## Water quality

| Water connection A* for water injection | |
|---|---|
| General requirements | Drinking water, typically treated water (install a water treatment system if necessary) |
| TDS | 70 - 125 ppm |
| Hardness | 70 - 125 ppm (4 - 7 gpg) |
| **Water connection B* for cleaning, recoil hand shower** | |
| General requirements | Drinking water, typically untreated water |
| TDS | 70 - 360 ppm |
| Hardness | 70 - 360 ppm (4 - 21 gpg) |
| **Water connections A, B*** | |
| pH value | 6.5 - 8.5 |
| $Cl^-$ (chloride) | max. 60 ppm |
| $Cl_2$ (free chlorine) | max. 0.2 ppm |
| $SO_4^{2-}$ (sulfate) | max. 150 ppm |
| Fe (iron) | max. 0.1 ppm |
| $SiO_2$ (silica) | max. 13 ppm |
| $NH_2Cl$ (monochloramine) | max. 0.4 ppm |
| Temperature | max. 104°F / max. 40°C |

* See connection positions diagram, p. 2.

NOTICE: The owner/operator/purchaser must ensure that the water quality requirements are met. Otherwise the original equipment warranty is void.

## Emissions

| | |
|---|---|
| **Heat emission** | |
| Latent | 3400 BTU/h |
| Sensitive | 4300 BTU/h |
| **Drain temperature** | max. 140°F / 60°C |
| **Decibel rating** | max. 70 dBA |

## Water consumption

| | |
|---|---|
| **Water connection A*** | |
| Average consumption for cooking | 1.11 gph |
| Required flow rate | 0.16 gpm |
| **Water connections A, B** | |
| Average consumption for cooking** | 1.66 gph |
| Required flow rate | 3.96 gpm |

*Values intended as guide for specifying the water treatment system.

**Incl. water required for cooling the wastewater.

NOTICE: See connection positions diagram, p. 2.

**Please note:**

- Please refer to the Installation manual for further technical data and for instructions on installation and setup.
- Convotherm reserves the right of design improvement or modification, as warranted.
- There are numerous federal, national and local laws, regulations and standards. It is the responsibility of the owner and installer to observe these laws, regulations and standards (e.g. fire regulations and health and safety standards).
- Convotherm combi steamers are built to comply with the applicable standards for manufacturers.

## ACCESSORIES

(For more detailed information, please refer to the Accessories brochure.)

## Stacking kit

| | |
|---|---|
| **Combination allowed** (electrical appliances only) | 6.10 on 10.10 |

## ConvoVent 4 condensation hood*

| | |
|---|---|
| **Electrical supply** | |
| **120V 1PH 60Hz** | |
| **Dimensions / Weight without packaging** | |
| Width | 34.53" |
| Depth | 42.72" |
| Height | 9.45" |
| Weight | 146 lbs |
| **Top safety clearance**** | 20" |

*Special condensation hoods are available for use with stacking kits.

**Depends on the type of exhaust system and the ceiling's characteristics.

## ConvoVent 4+ condensation hood*

| | |
|---|---|
| **Electrical supply** | |
| **120V 1PH 60Hz** | |
| **Dimensions / Weight without packaging** | |
| Width | 34.53" |
| Depth | 42.72" |
| Height | 14.69" |
| Weight | 187 lbs |
| **Top safety clearance**** | 20" |

*Special condensation hoods are available for use with stacking kits.

**Depends on the type of exhaust system and the ceiling's characteristics.

9758296_03 ENG_USA 01/15. © 2015 Manitowoc. Please note that the product is being continuously improved and that, as a result, these specifications are subject to change without notice.